OWNER:
STATE OF HAWAI'I
DEPARTMENT OF HAWAIIAN HOME LANDS

SITE AND INFRASTRUCTURE IMPROVEMENTS FOR HANAPĒPĒ RESIDENTIAL LOTS, PHASE 2

HANAPĒPĒ, WAIMEA, KAUA'I, HAWAI'I
PLANNING SUBDIVISION NO. HS-2023-2
TMK: (4) 1-8-007: 003 (PORTION) AND (4) 2-8-007: 001 TO 050 (PORTION)

PREPARED BY:
SSFM INTERNATIONAL, INC.
501 SUMNER STREET, SUITE 620
HONOLULU, HAWAI'I 96817

VICINITY MAP

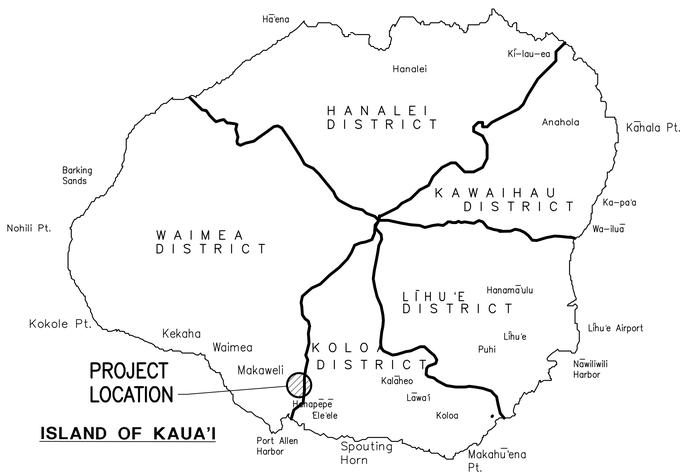

NORTH
VICINITY MAP
NOT TO SCALE

LOCATION MAP

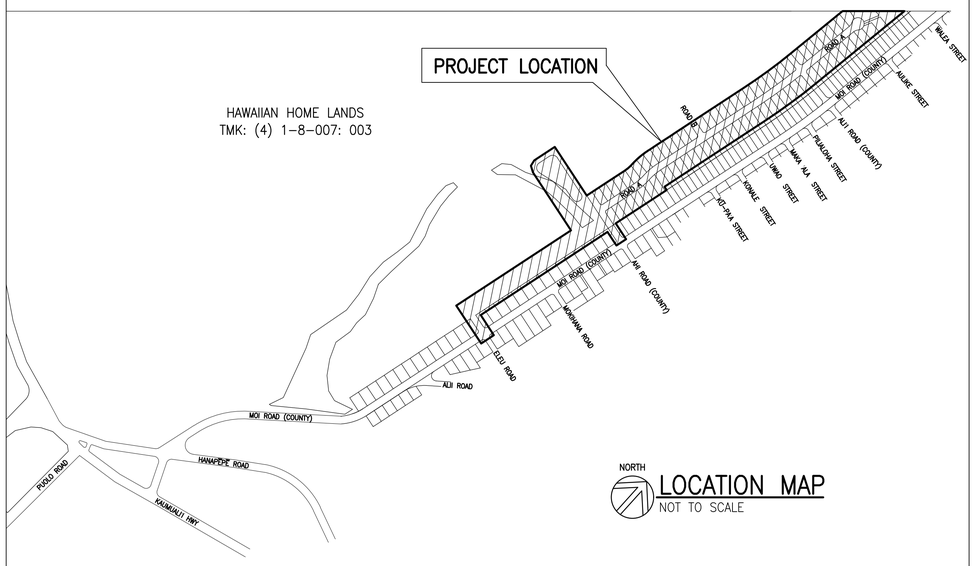

NORTH
LOCATION MAP
NOT TO SCALE

APPROVED

CHAIRMAN, DEPARTMENT OF HAWAIIAN HOME LANDS STATE OF HAWAI'I	DATE
DIRECTOR, PLANNING DEPARTMENT COUNTY OF KAUA'I	DATE
COUNTY ENGINEER, DEPT. OF PUBLIC WORKS COUNTY OF KAUA'I	DATE
FOR MANAGER AND CHIEF ENGINEER, DEPT. OF WATER COUNTY OF KAUA'I	DATE

RICHARD Y. SANTO
LICENSED PROFESSIONAL ENGINEER
NO. 8955-C
HAWAII USA

This work was prepared by me or under my supervision and is the property of SSFM International, Inc. and the State of Hawai'i. Unauthorized use of this work for any purpose is prohibited and is subject to penalties under law. Professional Engineers, Architects, Surveyors, and Landscape Architects)
4/30/24
Expiration date of the license
NOTE: Contractor to check and verify dimensions at job before proceeding with work.

SSFM International, Inc.
501 Sumner Street
Suite 620
Honolulu, Hawaii 96817

REVISION	DATE	DESCRIPTION	MADE BY	APPROVED

PROJECT:
DEPARTMENT OF HAWAIIAN HOME LANDS
SITE AND INFRASTRUCTURE IMPROVEMENTS
FOR HANAPĒPĒ RESIDENTIAL LOTS, PHASE 2
TMK: (4) 1-8-007: 003 (PORTION) & (4) 2-8-007: 001 TO 050 (PORTION)
Hanapēpē, Waimea, Kaua'i, Hawai'i

TITLE SHEET

THIS DOCUMENT CONTAINS INFORMATION PROPRIETARY TO SSFM INTERNATIONAL, INC. AND IS FURNISHED IN CONFIDENCE FOR THE LIMITED PURPOSE OF EVALUATION, BIDDING OR REVIEW. THIS DOCUMENT OR ITS CONTENTS MAY NOT BE USED FOR ANY OTHER PURPOSE AND MAY NOT BE REPRODUCED OR DISCLOSED TO OTHERS WITHOUT THE PRIOR WRITTEN CONSENT OF SSFM INTERNATIONAL, INC.

DATE
NOVEMBER 2022

SHEET NUMBER
T-1
1 OF 109 SHEETS

PRINTED: 11/10/22

W:_CIVIL 3D PROJECTS\2018_021.001 DHHL HANAPEPE RESIDENTIAL SUBDIVISION PHASE 2\01 CE DWG\T-1 TITLE SHEET.DWG 11/10/2022 1:09 PM EBORNALES

DRAWING INDEX

DRAWING NUMBER	DRAWING TITLE
T-1	TITLE SHEET
T-2	INDEX OF DRAWINGS AND ABBREVIATIONS
CIVIL	
C-001 TO C-004	CIVIL NOTES
C-100 TO C-101	EXISTING CONDITIONS PLAN
C-102	DEMOLITION PLAN
C-103 TO C-104	OVERALL EROSION AND SEDIMENT CONTROL PLAN
C-105	TYPICAL SECTIONS
C-106	OVERALL SITE PLAN
C-107 TO C-108	OVERALL GRADING PLANS
C-109	GRADING PHASING PLAN
C-110 TO C-111	OVERALL DRAINAGE PLANS
C-112 TO C-113	OVERALL SEWER PLANS
C-114	OVERALL WATER PLAN
C-115 TO C-116	EROSION AND SEDIMENT CONTROL PLANS
C-117 TO C-118	SITE PLANS
C-119 TO C-120	SIGNAGE AND PAVEMENT MARKING PLANS
C-121 TO C-126	GRADING AND DRAINAGE PLANS
C-127	GRADE ADJUSTMENT WALLS PLAN
C-128 TO C-129	RAMP DETAILED GRADING PLANS
C-201 TO C-203	ROAD A AND DRAINLINE A PLAN AND PROFILES
C-204	ROAD B AND DRAINLINE PLAN AND PROFILE
C-205	AHI ROAD AND ALII ROAD DRAINLINE PLAN AND PROFILE
C-211 TO C-213	DRAINLINE B PLAN AND PROFILES
C-214	DRAINLINE C AND D PLAN AND PROFILE
C-215	BASIN PLAN AND PROFILE
C-216 TO C-217	DRAIN LATERAL PROFILES
C-221 TO C-222	SEWERLINE A PLAN AND PROFILES
C-223	SEWERLINE B PLAN AND PROFILE
C-224 TO C-226	SEWERLINE C PLAN AND PROFILES
C-231 TO C-233	WATERLINE A PLAN AND PROFILES
C-234	WATERLINE B PLAN AND PROFILE
C-235	WATERLINE C PLAN AND PROFILE
C-236	FIRE HYDRANT PROFILES
C-301 TO C-302	GRADING SECTIONS
C-400	TRAFFIC CONTROL PLAN
C-501	EROSION AND SEDIMENT CONTROL DETAILS
C-502	CIVIL DETAILS
C-503 TO C-506	DRAINAGE DETAILS
C-507 TO C-508	SEWER DETAILS
C-509 TO C-515	WATER DETAILS
ELECTRICAL	
E-100	LOCATION MAP, SYMBOL LIST AND ABBREVIATIONS
E-101	GENERAL NOTES AND EQUIPMENT SCHEDULE
E-102	KIUC AND HTCO NOTES
E-103	HTCO NOTES
E-104	CATV NOTES
E-105	SANDWICH ISLES COMMUNICATIONS CONSTRUCTION NOTES
E-200	OVERALL SITE PLAN
E-201 TO E-205	ELECTRICAL DISTRIBUTION PLANS
E-206 TO E-210	STREET LIGHT PLANS
E-300	TYPICAL TRENCHING DETAILS AND CONDUIT SCHEDULE
E-301	TYPICAL DUCT SECTIONS
E-400	ELECTRICAL LAYOUT DETAILS
E-401 TO E-402	KIUC HANDHOLE DETAILS
E-403	CATV POWER SUPPLY DETAILS
E-404	STREET LIGHT DETAILS
E-405	STREET LIGHT EQUIPMENT DETAILS
E-500 TO E-501	STREET LIGHT ONE-LINE DIAGRAMS

ABBREVIATIONS

A.C.	ASPHALT CONCRETE		
AASHTO	AMERICAN ASSOCIATION OF STATE HIGHWAY AND TRANSPORTATION OFFICIALS	MAG	MAGNETIC
		MAX	MAXIMUM
AGGR	AGGREGATE	MECH	MECHANICAL
ALIGN	ALIGNMENT	MH	MANHOLE
APPROX	APPROXIMATE	MJ	MECHANICAL JOINT
ASTM	AMERICAN SOCIETY FOR TESTING AND MATERIAL	MIN	MINIMUM
		MON	MONUMENT
AZ	AZIMUTH	MPH	MILES PER HOUR
		MSL	MEAN SEA LEVEL
℄	BASELINE	MUTCD	MANUAL ON UNIFORM TRAFFIC CONTROL DEVICES
BM	BENCH MARK		
BMP	BEST MANAGEMENT PRACTICE		
BOT	BOTTOM	N	NORTH
BT	BACK TANGENT	N.D.	NOMINAL DIAMETER
BW	BOTTOM OF WALL	N/A	NOT APPLICABLE
BSW	BEGIN SWALE	NIC, N.I.C.	NOT IN CONTRACT
		NOS.	NUMBERS
℄	CENTERLINE	NSF	NATIONAL SANITATION FOUNDATION
CCH	CITY AND COUNTY OF HONOLULU	NTS	NOT TO SCALE
CI	CAST IRON		
CLR	CLEARANCE	O.C.	ON CENTER
COMM	COMMUNICATIONS	O/S	OFFSET
CONC	CONCRETE	O.A.	ON CENTER
CONST	CONSTRUCTION	OD	OUTSIDE DIAMETER
CU	CUBIC	OU	OVERHEAD UTILITY LINE
CY	CUBIC YARD		
		ℙ	PROPERTY LINE
Δ	DELTA	PC	POINT OF CURVE
°	DEGREE(S)	PE	PUSH-ON END
DHHL	DEPARTMENT OF HAWAIIAN HOMELANDS	PI	POINT OF INTERSECTION
DET	DETAIL	POC	POINT OF CONNECTION
DI	DUCTILE IRON	PRV	PRESSURE REDUCING VALVE
DIA	DIAMETER	PSI	POUNDS PER SQUARE INCH
DWG	DRAWING	PT	POINT OF TANGENT
DWGS	DRAWINGS	PVI	POINT OF VERTICAL INTERSECTION
DWS	DEPARTMENT OF WATER SUPPY		
DWY	DRIVEWAY	QTY	QUANTITY
E.F.	EACH FACE	R	RADIUS
E.W.	EACH WAY	REINF	REINFORCE, REINFORCING
EG	EXISTING GROUND	RM	ROOM
E/D	EXISTING DRAIN	ROW, R/W	RIGHT-OF-WAY
E, ELEC	ELECTRIC / ELECTRICITY	RPM	RAISED PAVEMENT MARKER
EL, ELEV	ELEVATION	RT	RIGHT
ESMT	EASEMENT		
ESW	END SWALE	S	SLOPE
EXIST	EXISTING	SD	STORM DRAIN
		SDMH	STORM DRAIN MANHOLE
FA	FIRE ALARM	S.F.	SQUARE FEET
FCMH	FLOW CONTROL MANHOLE	SHLDR	SHOULDER
FDC	FIRE DEPARTMENT CONNECTION	SHT	SHEET
FFE	FINISH FLOOR ELEVATION	SIG	SIGNAL
FG	FINISH GRADE	SMH	SEWER MANHOLE
FH	FIRE HYDRANT	SPEC	SPECIFICATION
FIN	FINISH, FINISHED	SQ	SQUARE
FL	FIRELINE / FLANGE JOINT	SST	STAINLESS STEEL
FOC	FACE OF CURB	ST	STREET
FRP	FIBERGLASS REINFORCED PLASTIC	STA	STATION
FT	FOOT, FEET	STD	STANDARD
GDI	GRATED DRAIN INLET	T	TANGENT DISTANCE
GP	GUARD POST	T&B	TOP & BOTTOM
G.I.	GALVANIZED IRON	T.O.	TURNOUT
GND	GROUND	TBM	TEMPORARY BENCH MARK
GW	GUY WIRE	TC	TOP FACE OF CURB
		GOVERN.	THICK
H, HORIZ	HORIZONTAL	TG	TOP OF GRATE
HAR	HAWAI'I ADMINISTRATIVE RULES	TMK	TAX MAP KEY
HDOT	HIGHWAYS DEPARTMENT OF TRANSPORTATION	TP	TOP OF PAVEMENT
		TRAV	TRAVERSE
HSS	HAWAI'I STANDARD SPECIFICATIONS	TS	TANGENT TO SPIRAL
HWY	HIGHWAY	TSB	TRAFFIC SIGNAL BOX
		TT	TOP OF TILE
ID	INSIDE DIAMETER	TW	TOP OF WALL
IN	INCHES	TYP.	TYPICAL
INV	INVERT		
IRR	IRRIGATION	UG	UNDERGROUND
		UP	UTILITY POLE
JT(S)	JOINT(S)		
		V	VELOCITY
K	ALGEBRAIC DIFFERENCE	VERT	VERTICAL
		VIF	VERIFY IN FIELD
L	LENGTH		
LB(S)	POUND(S)	W/	WITH
LT	LEFT	W	WEST
		YD	YARD

APPROVED:

FOR MANAGER AND CHIEF ENGINEER, DEPT. OF WATER COUNTY OF KAUA'I — DATE

RICHARD Y. SANTO
LICENSED PROFESSIONAL ENGINEER
NO. 8955-C
HAWAII USA

This work was prepared by me or under my supervision and I certify that to the best of my knowledge, the design is in accordance with the Professional Engineers, Architects, Surveyors, and Landscape Architects Laws. — 4/30/24 — expiration date of the license

NOTE: Contractor to check and verify dimensions at job before proceeding with work.

SSFM International
SSFM International, Inc.
501 Sumner Street
Suite 620
Honolulu, Hawaii 96817

REVISION	DATE	DESCRIPTION	MADE BY	APPROVED

PROJECT:
DEPARTMENT OF HAWAIIAN HOME LANDS
SITE AND INFRASTRUCTURE IMPROVEMENTS
FOR HANAPĒPĒ RESIDENTIAL LOTS, PHASE 2
TMK: (4) 1-8-007: 003 (PORTION) & (4) 2-8-007: 001 TO 050 (PORTION)
Hanapēpē, Waimea, Kaua'i, Hawai'i

INDEX OF DRAWINGS AND ABBREVIATIONS

THIS DOCUMENT CONTAINS INFORMATION PROPRIETARY TO SSFM INTERNATIONAL, INC., AND IS FURNISHED IN CONFIDENCE FOR THE LIMITED PURPOSE OF EVALUATION, BIDDING OR REVIEW. THIS DOCUMENT OR ITS CONTENTS MAY NOT BE USED FOR ANY OTHER PURPOSE AND MAY NOT BE REPRODUCED OR DISCLOSED TO OTHERS WITHOUT THE PRIOR WRITTEN CONSENT OF SSFM INTERNATIONAL, INC.

DATE
NOVEMBER 2022

SHEET NUMBER
T-2

2 OF 109 SHEETS

PRINTED: 11/14/22

W:_CIVIL 3D PROJECTS\2018_021.001 DHHL HANAPEPE RESIDENTIAL SUBDIVISION PHASE 2\01 CE DWG\T-2 INDEX OF DRAWINGS AND ABBREVIATIONS.DWG 11/11/2022 2:33 PM EBORNALES

NOTES FOR GENERAL CONSTRUCTION

1. ALL CONSTRUCTION WORK IS TO BE CONSTRUCTED IN ACCORDANCE WITH THE CURRENT VERSIONS OF THE PUBLICATIONS "HAWAI'I STANDARD SPECIFICATIONS FOR ROAD AND BRIDGE CONSTRUCTION", THE "HAWAI'I DEPARTMENT OF TRANSPORTATION HIGHWAYS DIVISION STANDARD PLANS", AND THE "STANDARD DETAILS FOR PUBLIC WORKS CONSTRUCTION, CITY AND COUNTY OF HONOLULU, AND THE COUNTIES OF KAUA'I, MAUI, AND HAWAI'I." THE STANDARD DETAILS ARE AVAILABLE AT THE COUNTY OF KAUA'I CLERK'S OFFICE.

2. APPROVAL BY THE COUNTY SHALL IN NO WAY RELIEVE THE DESIGN ENGINEER OF THEIR RESPONSIBILITIES AND PROFESSIONAL OBLIGATIONS. THEY SHALL BE HELD RESPONSIBLE FOR THE ADEQUACY OF THE DESIGN AND ACCURACY AND COMPLETENESS OF THE PLANS AND SPECIFICATIONS. CHANGES OR REVISIONS TO CORRECT ANY DEFICIENCIES SHALL BE MADE BY AND AT THE EXPENSE OF THE DESIGNER. SUCH CHANGES AND REVISIONS SHALL REQUIRE APPROVAL BY THE COUNTY.

3. NO GRADING BETWEEN 7 P.M. TO 7 A.M. ON ANY GIVEN DAY OR ON SATURDAYS, SUNDAYS, AND HOLIDAYS WITHOUT WRITTEN PERMISSION FROM THE COUNTY ENGINEER AND THE STATE DEPARTMENT OF HEALTH.

4. CONTRACTOR TO NOTIFY PUBLIC WORKS DEPARTMENT FIVE (5) BUSINESS DAYS PRIOR TO COMMENCING ANY GRADING WORK. WHEN COMPLETED AND READY FOR FINAL INSPECTION; NOTIFY PUBLIC WORKS DEPARTMENT INSPECTION SECTION.

5. CONSTRUCTION PLANS ARE VALID FOR A PERIOD OF ONE YEAR FROM THE DATE OF APPROVAL. IF CONSTRUCTION DOES NOT COMMENCE WITHIN THE ONE-YEAR TIME FROM THE DATE OF APPROVAL, THE CONSTRUCTION PLANS SHALL BE RESUBMITTED TO ALL REVIEWING AND APPROVING AGENCIES FOR REVIEW, APPROVAL, AND RECERTIFICATION OF THE PLAN.

5. ALL GRADING, GRUBBING, AND STOCKPILING WORK SHALL BE PERFORMED IN ACCORDANCE WITH THE COUNTY OF KAUA'I ORDINANCE NO. 808.

6. AFTER EACH RAINFALL EVENT, THE CONTRACTOR SHALL REMOVE ALL SILT AND DEBRIS RESULTING FROM HIS WORK AND DEPOSITED IN DRAINAGE FACILITIES, ROADWAYS, AND OTHER AREAS. THE COST INCURRED FOR ANY NECESSARY REMEDIAL ACTION BY THE COUNTY ENGINEER SHALL BE PAYABLE BY THE CONTRACTOR.

7. DURING CLEANING OPERATIONS, THE CONTRACTOR SHALL SUPPLY A WATER TRUCK FOR DUST CONTROL PURPOSES UNTIL THE VEGETATION HAS RE-ESTABLISHED ITSELF. EXCESS WATER, INCLUDING SILT AND DIRT, SHALL NOT BE ALLOWED TO RUN-OFF THE PROPERTY.

8. BENCHMARKS THAT ARE DISTURBED OR DESTROYED SHALL BE RESTORED UNDER A LICENSED LAND SURVEYOR'S DIRECTION. COPIES OF FIELD NOTES, DESCRIPTIONS AND NEW VALUES OF THE NEW BENCHMARK SHALL BE SENT TO THE DEPARTMENT OF PUBLIC WORKS SURVEY SECTION FOR REVIEW AND APPROVAL PRIOR TO FINAL ACCEPTANCE OF THE PROJECT.

9. THE CONTRACTOR SHALL BE RESPONSIBLE FOR ALL OVERTIME AND/OR NIGHT WORK PAYMENTS FOR THE COUNTY'S STAFF AND INSPECTION PERSONNEL INCLUDING CONSULTANTS, WHEN THE CONTRACT REQUIRES OVERTIME OR NIGHT WORK TO BE PERFORMED, OR DIRECTS THE CONTRACTOR TO WORK ADDITIONAL SHIFTS OR OVERTIME FOR COUNTY'S CONVENIENCE.

10. BEST MANAGEMENT PRACTICES (BMP'S) SHALL BE EMPLOYED AT ALL TIMES TO THE MAXIMUM EXTENT PRACTICABLE TO PREVENT DAMAGE BY SEDIMENTATION, EROSION OR DUST TO STREAMS, WATERCOURSES, NATURAL AREAS AND THE PROPERTY OF OTHERS.

11. SURVEYS, AND ALL CONSTRUCTION STAKE OUT FOR MASS GRADING, FINAL ROADWAY AND SHOULDER IMPROVEMENTS, AND UTILITIES (SEWER, DRAIN, WATER, ELECTRICAL, ETC.) SHALL BE DONE UNDER THE SUPERVISION OF A LAND SURVEYOR LICENSED IN THE STATE OF HAWAI'I. IF THE CONTRACTOR ELECTS TO PERFORM THE SURVEY AND CONSTRUCTION STAKE OUTS WITHOUT THE SUPERVISION OF A LAND SURVEYOR, THE CONTRACTOR SHALL SUBMIT FINAL AS-BUILT PLANS CERTIFIED BY A LAND SURVEYOR THAT ALL UTILITIES AND ALL GRADING WORK FOR FINAL ROAD AND SHOULDER ELEVATIONS WERE CONSTRUCTED IN THE LOCATION AND ELEVATIONS (INCLUDED BUT NOT LIMITED TO TOP AND INVERTS FOR UTILITIES) AS SHOWN ON THE AS-BUILT PLANS AND CERTIFIED BY THE DESIGN ENGINEER THAT THE AS-BUILT LOCATION AND ELEVATIONS FOR THE IMPROVEMENTS MEETS MINIMUM DESIGN STANDARDS AND REGULATORY REQUIREMENTS.

12. IF SYSTEM CONDITIONS REQUIRE NON-EMERGENCY NIGHTTIME WORK DURING THE AUTUMN SEABIRD FALL SEASON (SEPTEMBER 15 THROUGH DECEMBER 15), USE OF LIGHTING SHALL BE RESTRICTED BETWEEN 9:00 P.M. TO 4:30 A.M. IF LIGHTING OF THE WORK AREA IS REQUIRED IN SUCH SITUATION, ALL LIGHTS SHALL BE SHIELDED (MINIMUM LIGHT SPILL TOWARDS THE SKY) AND DIRECTED DOWNWARDS TO THE MAXIMUM EXTENT PRACTICABLE. MINIMUM REQUIREMENTS FOR LIGHTING BY HIOSH AND OSHA SHALL BE PROVIDED AND ASSURED BY THE CONTRACTOR. THE CONTRACTOR SHALL TRAIN ALL EMPLOYEES WORKING AT NIGHT (RECORDS RETAINED BY THE CONTRACTOR) ON HOW TO HANDLE ANY RETRIEVED DOWNED BIRDS AND SHALL HAVE APPROPRIATE EQUIPMENT AS APPROVED BY SAVE OUR SHEARWATERS (SOS) ON SITE TO HOLD AND TRANSPORT ANY RETRIEVED BIRDS TO AN SOS FACILITY. THIS REQUIREMENT DOES NOT ALLOW LIGHTING AS MAY BE RESTRICTED BY OTHER GOVERNMENT AGENCIES.

13. PRIOR TO STARTING ANY EXCAVATION ACTIVITIES, THE CONTRACTOR SHALL CONTACT THE HAWAI'I ONE CALL CENTER AT 1-866-423-7287.

14. PRIOR TO INSTALLATION OF ANY NEW SEWER LINES, DRAIN LINES, MANHOLES, AND STRUCTURES THAT WILL BE TRANSFERRED TO THE COUNTY OR REQUIRED FOR THE SUBDIVISION OF THE PROPERTY, THE CONTRACTOR SHALL HAVE ALL IMPROVEMENTS (MAINS, PIPES, APPURTENANCES AND STRUCTURES) SURVEYED AND STAKED OUT BY A LICENSED PROFESSIONAL LAND SURVEYOR AND THE CONTRACTOR SHALL EXPOSE, VERIFY, AND BACKFILL ALL EXISTING UNDERGROUND UTILITIES AND STRUCTURES IN CLOSE PROXIMITY TO CROSSINGS AND CONNECTIONS PRIOR TO EXCAVATION OF PIPELINE TRENCH. CONTRACTOR SHALL PROVIDE THE LICENSED SURVEYOR CUT SHEET AND PROBING INFORMATION TO THE PUBLIC WORKS ENGINEERING CONSTRUCTION ENGINEER FOR REVIEW AND APPROVAL BEFORE MOVING FORWARD WITH INSTALLATION VIA THE SUBMITTAL REVIEW PROCESS.

15. PRIOR TO INSTALLATION OF FINAL ROADWAY IMPROVEMENTS (SUBGRADE, BASE COURSE, AND FINAL CONCRETE OR AC PAVEMENT, CURBS, GUTTERS, SIDEWALK, ETC.) AND/OR ANY NEW RIGHT OF WAY IMPROVEMENTS THAT WILL BE TRANSFERRED TO THE COUNTY OR REQUIRED FOR THE SUBDIVISION OF THE PROPERTY, THE CONTRACTOR SHALL HAVE ALL IMPROVEMENTS SURVEYED AND STAKED OUT BY A LICENSED PROFESSIONAL LAND SURVEYOR AND THE CONTRACTOR SHALL EXPOSE, VERIFY, AND BACKFILL ALL EXISTING UNDERGROUND UTILITIES AND STRUCTURES IN CLOSE PROXIMITY TO CONNECTIONS PRIOR TO ESTABLISHING ROAD SUBGRADE. CONTRACTOR SHALL PROVIDE THE LICENSED SURVEYOR ROAD CENTERLINE (AND/OR CURB OFFSETS) CUT SHEET OF FINAL SUBGRADE TO THE PUBLIC WORKS ENGINEERING CONSTRUCTION ENGINEER FOR REVIEW AND APPROVAL BEFORE MOVING FORWARD WITH THE INSTALLATION VIA THE SUBMITTAL REVIEW PROCESS.

16. THE DEPARTMENT OF PUBLIC WORKS SHALL BE PROVIDED TWENTY (20) WORKING DAYS FOR ALL SUBMITTAL REVIEWS FROM THE TIME OF SUBMISSION BY THE CONTRACTOR.

17. THE DEPARTMENT OF PUBLIC WORKS SHALL HAVE ACCESS TO THE WORK AT ALL TIMES DURING CONSTRUCTION AND SHALL BE FURNISHED WITH EVERY REASONABLE FACILITY (INCLUDING BUT NOT LIMITED TO LAYOUT UNDER THE SUPERVISION OF A LAND SURVEYOR LICENSED IN THE STATE OF HAWAI'I) FOR ASCERTAINING THAT THE MATERIALS USED AND THE WORKMANSHIP ARE IN ACCORDANCE WITH THE REQUIREMENTS OF THE CHAPTER 9 SUBDIVISION ORDINANCE; ORDINANCE NO. 808, ARTICLE 7, GRADING, GRUBBING AND STOCKPILING; AND THE STANDARDS ESTABLISHED BY THE DEPARTMENT OF PUBLIC WORKS.

18. FOR GRADING WORK EXCEEDING ONE (1) ACRE, WITH EMBANKMENTS IN EXCESS OF FIVE HUNDRED (500) CUBIC YARDS, AND WITH A DEPTH OF MORE THAN FOUR (4) FEET, THE CONTRACTOR SHALL RETAIN THE SERVICES OF A GEOTECHNICAL ENGINEER FOR QUALITY CONTROL. CERTIFICATION FROM THE GEOTECHNICAL ENGINEER SHALL BE SUBMITTED TO THE DEPARTMENT OF PUBLIC WORKS AT THE COMPLETION OF THE GRADING WORK. THE GEOTECHNICAL ENGINEER SHALL CERTIFY THAT THE GRADING WORK MEETS THE REQUIREMENTS OF THE "HAWAI'I STANDARD SPECIFICATIONS FOR ROAD AND BRIDGE CONSTRUCTION, 2005" AND ITS AMENDMENTS; THE "STANDARD DETAILS FOR PUBLIC WORKS CONSTRUCTION, COUNTY OF KAUA'I, CITY AND COUNTY OF HONOLULU, COUNTY OF MAUI, AND THE COUNTY OF HAWAI'I DATED SEPTEMBER 1984" OR AS AMENDED; ORDINANCE NO. 808, ARTICLE 7, GRADING GRUBBING, AND STOCKPILING; AND THE APPROVED CONSTRUCTION PLANS. THE GEOTECHNICAL ENGINEER SHALL ALSO SUBMIT TEST RESULTS AS REQUESTED BY THE DEPARTMENT OF PUBLIC WORKS.

19. UPON COMPLETION OF CONSTRUCTION, THE CONTRACTOR WILL PREPARE AND CERTIFY AS-BUILT DRAWINGS THAT REPRESENT ALL CHANGES TO THE ORIGINAL APPROVED CONSTRUCTION PLANS. THE OWNER'S LICENSED DESIGN ENGINEER WILL CERTIFY THAT ALL OF THE CHANGES SHOWN ON THE AS-BUILT DRAWINGS HAVE BEEN APPROVED BY THE DESIGN ENGINEER AND MEET MINIMUM STANDARDS IN ACCORDANCE WITH THE REQUIREMENTS OF THE ORIGINAL APPROVED CONSTRUCTION PLANS. THE DEPARTMENT OF PUBLIC WORKS MAY REQUIRE EVERY REASONABLE FACILITY TO VERIFY ANY IMPROVEMENT ON THE FINAL AS-BUILT PLANS PRIOR TO THE CERTIFICATION BY THE OWNER'S ENGINEER, INCLUDING BUT NOT LIMITED TO HAVING A LAND SURVEYOR LICENSED IN THE STATE OF HAWAI'I CONFIRM AND CERTIFY THE FINAL LOCATION AND ELEVATIONS

NOTES FOR CONSTRUCTION WITHIN COUNTY ROW

1. ALL DAMAGED PAVEMENT SHALL BE RESTORED TO ITS ORIGINAL CONDITION IN ACCORDANCE WITH COUNTY OF KAUA'I, "HAWAI'I STANDARD SPECIFICATIONS FOR ROAD AND BRIDGE CONSTRUCTION, 2005" AND ITS AMENDMENTS IN THE "STANDARD DETAILS FOR PUBLIC WORKS CONSTRUCTION, SEPTEMBER 1984", AS AMENDED BY THE DEPARTMENT FOR PUBLIC WORKS, CITY AND COUNTY OF HONOLULU, AND THE COUNTIES FOR KAUA'I, MAUI, AND HAWAI'I, WITH 2" MINIMUM HOT MIXED ASPHALT CONCRETE PAVEMENT (STATE DESIGN MIX V) AND 8" MINIMUM BASE COURSE.

2. THE CONTRACTOR SHALL PROVIDE, INSTALL AND MAINTAIN ALL NECESSARY SIGNS, LIGHTS, FLARES, BARRICADES, MARKERS, CONES AND OTHER PROTECTIVE FACILITIES AND SHALL TAKE ALL NECESSARY PRECAUTIONS FOR THE PROTECTION AND FOR THE CONVENIENCE AND SAFETY OF THE PUBLIC TRAFFIC. ALL SUCH PROTECTIVE FACILITIES AND PRECAUTIONS TO BE TAKEN SHALL CONFORM WITH THE RULES AND REGULATIONS GOVERNING THE USE OF TRAFFIC CONTROL DEVICES AT WORK SITES ON OR ADJACENT TO PUBLIC STREETS AND HIGHWAYS ADOPTED BY THE HIGHWAY SAFETY COORDINATOR AND U.S. FEDERAL HIGHWAY ADMINISTRATION MANUAL ON UNIFORM TRAFFIC CONTROL DEVICES FOR STREETS AND HIGHWAYS DATED 2009 AND ITS AMENDMENTS.

3. THE CONTRACTOR SHALL, WHENEVER NECESSARY, PROPERLY SHEET AND BRACE ALL EXCAVATIONS TO RENDER IT SECURE AND SHALL REMOVE ALL SUCH SHEETING AND BRACING BEFORE COMPLETION OF THE BACKFILL FOR WATER MAINS. THE MINIMUM COVER REQUIREMENTS (FROM TOP OF PIPE TO FINISHED GRADE OVER PIPE) IS THREE (3) FEET.

4. A. A PERMIT SHALL BE OBTAINED BY THE CONTRACTOR FROM THE DEPARTMENT OF PUBLIC WORKS, COUNTY OF KAUA'I BEFORE WORK ON A PUBLIC STREET OR HIGHWAY MAY BEGIN. PERMIT FEES SHALL BE AT THE CONTRACTOR'S EXPENSE.

   B. DRIVEWAYS SHALL BE KEPT OPEN UNLESS OWNERS OF THE ABUTTING LOTS USING THESE (ROW) ARE OTHERWISE PROVIDED FOR SATISFACTORILY.

   C. ALL WORK INCLUDING REPAIR OF DAMAGED PAVEMENT AND SHOULDERS SHALL BE INSPECTED AND APPROVED BY THE DEPARTMENT OF PUBLIC WORKS. ALL UNAPPROVED WORK SHALL BE CONSIDERED UNACCEPTABLE AND SHALL BE REWORKED AND CORRECTED AS DIRECTED BY THE DEPARTMENT OF PUBLIC WORKS, AT THE CONTRACTOR'S EXPENSE.

   D. DAMAGED SHOULDERS SHALL BE RESTORED TO A CONDITION EQUAL TO OR BETTER THAN EXISTING CONDITION.

   E. WORK ON A PUBLIC STREET AREA MY BE PERFORMED ONLY BETWEEN THE HOURS OF 8:00 A.M. TO 3:30 P.M. MONDAY THROUGH FRIDAY, EXCEPT ON HOLIDAYS RECOGNIZED BY THE COUNTY OF KAUAI, UNLESS OTHERWISE PERMITTED IN WRITING BY THE COUNTY ENGINEER.

   F. DURING NON-WORKING HOURS, ALL TRENCHED SHALL BE COVERED WITH A SAFE NON-SKID BRIDGING MATERIAL AND ALL LANES SHALL BE OPENED TO PUBLIC VEHICULAR AND PEDESTRIAN TRAFFIC.

   G. NO MATERIAL AND/OR EQUIPMENT SHALL BE STOCKPILED OR OTHERWISE STORED WITHIN COUNTY RIGHT-OF-WAY EXCEPT AT LOCATIONS DESIGNATED IN WRITING AND APPROVED BY THE COUNTY ENGINEER.

   H. THE CONTRACTOR SHALL CONDUCT HIS OPERATIONS SO AS TO OFFER THE LEAST POSSIBLE OBSTRUCTIONS AND INCONVENIENCE TO THE PUBLIC AND HE SHALL HAVE UNDER CONSTRUCTION NO GREATER LENGTH OR AMOUNT OF WORK THAN HE CAN EXECUTE PROPERLY WITH DUE REGARD TO THE RIGHTS OF THE PUBLIC.

   I. ALL EXISTING DRAINAGE FLOW CONDITIONS SHALL BE MAINTAINED.

5. THE CONTRACTOR SHALL RETAIN THE SERVICES OF A GEOTECHNICAL ENGINEER FOR QUALITY CONTROL. CERTIFICATION FROM THE GEOTECHNICAL ENGINEER SHALL BE SUBMITTED TO THE DEPARTMENT OF PUBLIC WORKS AT THE COMPLETION OF THE CONSTRUCTION WORK. THE GEOTECHNICAL ENGINEER SHALL CERTIFY THAT THE CONSTRUCTION WORK MEETS THE "STANDARD SPECIFICATIONS". THE GEOTECHNICAL ENGINEER SHALL ALSO SUBMIT TEST RESULTS AS REQUESTED BY THE DEPARTMENT OF PUBLIC WORKS.

6. THE CONTRACTOR SHALL HOLD A PRE-CONSTRUCTION MEETING WITH THE CONSTRUCTION - DESIGN SECTIONS OF THE DEPARTMENT OF PUBLIC WORKS BEFORE COMMENCING ANY WORK.

7. THE CONTRACTOR SHALL EXERCISE EXTREME CAUTION TO PRESERVE BENCHMARKS (SURVEY MONUMENTS) WHENEVER THE CENTER OF A SURVEY MONUMENT IS LESS THAN THREE (3) FEET FROM THE EDGE OF CONSTRUCTION. THE CONTRACTOR SHALL RETAIN A LICENSED SURVEYOR TO REFERENCE THE LOCATION OF SAID SURVEY MONUMENT.

8. BENCHMARKS THAT ARE DISTURBED OR DESTROYED SHALL BE RESTORED UNDER A LICENSED LAND SURVEYOR'S DIRECTION. COPIES OF FIELD NOTES, DESCRIPTIONS AND NEW VALUES OF THE NEW BENCHMARK SHALL BE SENT TO THE DEPARTMENT OF PUBLIC WORKS SURVEY SECTION FOR REVIEW AND APPROVAL PRIOR TO FINAL ACCEPTANCE OF THE PROJECT.

9. THE CONTRACTOR SHALL BE RESPONSIBLE FOR ALL OVERTIME OR NIGHT WORK PAYMENTS FOR COUNTY'S STAFF AND INSPECTION PERSONNEL INCLUDING CONSULTANTS WHEN THE CONTRACT REQUIRES OVERTIME OR NIGHT WORK TO BE PERFORMED OR DIRECTS THE CONTRACTOR TO WORK ADDITIONAL SHIFTS OR OVERTIME FOR COUNTY'S CONVENIENCE.

10. IF SYSTEM CONDITIONS REQUIRE NON-EMERGENCY NIGHTTIME WORK DURING THE AUTUMN SEABIRD FALL SEASON (SEPTEMBER 15 THROUGH DECEMBER 15), USE OF LIGHTING SHALL BE RESTRICTED BETWEEN 9:00 P.M. TO 4:30 A.M. IF LIGHTING OF THE WORK AREA IS REQUIRED IN SUCH SITUATION, ALL LIGHTS SHALL BE SHIELDED (MINIMUM LIGHT SPILL TOWARDS THE SKY) AND DIRECTED DOWNWARDS TO THE MAXIMUM EXTENT PRACTICABLE. MINIMUM REQUIREMENTS FOR LIGHTING BY HIOSH AND OSHA SHALL BE PROVIDED AND ASSURED BY THE CONTRACTOR. THE CONTRACTOR SHALL TRAIN ALL EMPLOYEES WORKING AT NIGHT (RECORDS RETAINED BY THE CONTRACTOR) IN HOW TO HANDLE ANY RETRIEVED DOWNED BIRDS AND SHALL HAVE APPROPRIATE EQUIPMENT AS APPROVED BY SAVE OUR SHEARWATERS (SOS) ON SITE TO HOLD AND TRANSPORT ANY RETRIEVED BIRDS TO AN SOS FACILITY. THIS REQUIREMENT DOES NOT ALLOW LIGHTING AS MAY BE RESTRICTED BY OTHER GOVERNMENT AGENCIES.

HISTORICAL RESERVATION NOTES

1. SHOULD HISTORIC REMAINS SUCH AS ARTIFACTS, BURIALS, CONCENTRATIONS OF SHELL OR CHARCOAL BE ENCOUNTERED DURING CONSTRUCTION ACTIVITIES, WORK SHALL CEASE IMMEDIATELY IN THE IMMEDIATE VICINITY OF THE FIND AND THE FIND SHALL BE PROTECTED FROM FURTHER DAMAGE. THE CONTRACTOR SHALL CORDON OFF THE AREA AND IMMEDIATELY NOTIFY THE PLANNING DEPARTMENT AT (808) 241-4050 AND THE STATE HISTORIC PRESERVATION DIVISION AT (808) 692-8015, WHICH WILL ASSESS THE SIGNIFICANCE OF THE FIND AND RECOMMEND THE APPROPRIATE MITIGATION MEASURES, IF NECESSARY. IN ADDITION, IF HUMAN BURIALS ARE FOUND, THE CONTRACTOR SHALL IMMEDIATELY NOTIFY THE COUNTY OF KAUA'I POLICE DEPARTMENT.

CONSTRUCTION NOTES FOR TRAFFIC CONTROL PLANS

1. THE PERMITTEE SHALL MAKE ADJUSTMENTS AT INTERSECTIONS, DRIVEWAYS, BRIDGES, STRUCTURES, ETC., TO FIT FIELD CONDITIONS.

2. CONES OR DELINEATORS SHALL BE EXTENDED TO A POINT WHERE THEY ARE VISIBLE TO APPROACHING TRAFFIC.

3. TRAFFIC CONTROL DEVICES SHALL BE INSTALLED SUCH THAT THE SIGN OR DEVICE FARTHEST FROM THE WORK AREA SHALL BE PLACED FIRST. THE OTHERS SHALL THEN BE PLACED PROGRESSIVELY TOWARD THE WORK AREA.

4. REGULATORY AND WARNING SIGNS WITHIN THE CONSTRUCTION ZONE THAT ARE IN CONFLICT WITH THE TRAFFIC CONTROL PLANS SHALL BE REMOVED OR COVERED. ALL SIGNS SHALL BE RESTORED UPON COMPLETION OF THE WORK.

5. FLAGGERS AND/OR POLICE OFFICERS SHALL BE IN SIGHT OF EACH OTHER OR IN DIRECT COMMUNICATION AT ALL TIMES.

6. WHEN REQUIRED BY THE ISSUING OFFICE, THE PERMITTEE SHALL INSTALL A FLASHING ARROW SIGNAL AS SHOWN ON THE TRAFFIC CONTROL PLAN.

7. SIGN SPACING (D), TAPER LENGTHS (T) AND SPACING OF CONES OR DELINEATORS SHALL BE AS SHOWN IN TABLE 1, UNLESS OTHERWISE NOTED ON THE TRAFFIC CONTROL PLANS.

8. ALL TRAFFIC LANES SHALL BE A MINIMUM OF 10 FEET WIDE.

9. ALL CONSTRUCTION WARNING SIGNS SHALL BE PROMPTLY REMOVED OR COVERED WHENEVER THE MESSAGE IS NOT APPLICABLE OR NOT IN USE.

10. THE BACKS OF ALL SIGNS SHALL BE PROMPTLY REMOVED OR COVERED TO PRECLUDE THE DISPLAY OF INAPPLICABLE SIGN MESSAGES (I.E., WHEN SIGNS HAVE MESSAGES ON BOTH FACES), WHENEVER THE MESSAGES ARE NOT APPLICABLE OR NOT IN USE.

11. AT THE END OF EACH DAY'S WORK OR AS SOON AS THE WORK IS COMPLETED, THE PERMITTEE SHALL REMOVE ALL TRAFFIC CONTROL DEVICES NO LONGER NEEDED TO PERMIT FREE AND SAFE PASSAGE OF PUBLIC TRAFFIC. REMOVAL SHALL BE IN THE REVERSE ORDER OF INSTALLATION.

12. REPLACE PERMANENT PAVEMENT MARKINGS AND TRAFFIC SIGNS UPON COMPLETION OF EACH PHASE OF WORK.

13. POLICE OFFICERS/FLAGGERS SHALL BE PRESENT AT ALL TIMES.

14. WHEN REQUIRED BY THE COUNTY OF KAUA'I, AN ADVERTISEMENT SHALL BE PLACED IN THE NEWSPAPER BY THE CONTRACTOR FOR ANY LANE CLOSURE. THE ADVERTISEMENT SHALL BE MADE ONE (1) WEEK BEFORE ANY LANE CLOSURE AND SHALL CONTAIN THE FOLLOWING INFORMATION:

    A. MAP OF THE TRAFFIC CHANGE LIMITS;
    B. NOTICE OF STARTING AND ENDING DATES, TIME AND DURATION;
    C. MAP TO SHOW LANE CLOSURE;
    D. EXPLANATION OF THE LANE CLOSURE; "NOTICE TO MOTORIST & PEDESTRIANS"

    THE CONTRACTOR SHALL BE REQUIRED TO HAVE ANY LANE CLOSURE ANNOUNCED DAILY OVER THE RADIO TWO (2) DAYS BEFORE STARTING DATE UNTIL THE WORK IS COMPLETED. BOTH ADVERTISEMENTS IN THE NEWSPAPER AND OVER THE RADIO SHALL BE PAID FOR BY THE CONTRACTOR. THE CONTRACTOR SHALL ALSO NOTIFY THE HOSPITALS, POLICE, FIRE AND AMBULATORY SERVICES OF THE LANES CLOSURES.

15. ALL WORKERS WITHIN THE COUNTY R/W WHO ARE EXPOSED TO EITHER VEHICLES USING THE ROADWAY OR TO CONSTRUCTION EQUIPMENT SHALL WEAR HIGH VISIBILITY SAFETY APPAREL THAT MEETS THE PERFORMANCE CLASS 2 OR 3 REQUIREMENTS OF ANSI/ISEA 107-2004. "WORKERS" ARE DEFINED AS PEOPLE ON FOOT WHOSE DUTIES PLACE THEM WITHIN THE ROAD RIGHT-OF-WAY, SUCH AS, BUT NOT LIMITED TO CONSTRUCTION AND MAINTENANCE FORCES, EQUIPMENT OPERATORS, SURVEY CREW, UTILITY CREW, RESPONDERS TO INCIDENTS (I.E., EMT AND FIREMEN), AND LAW ENFORCEMENT PERSONNEL DIRECTING TRAFFIC, INVESTIGATING ACCIDENTS, HANDLING LANE CLOSURES AND ROADWAY CONSTRUCTION.

16. ALL TRAFFIC CONTROL DEVICES SHALL BE REFLECTORIZED WHEN USED AT NIGHT. CONES SHALL BE EQUIPPED WITH REFLECTORIZED COLLAR WHEN USED AT NIGHT. FLASHING LIGHTS SHALL BE USED WITH BARRICADES AND STEADY BURN LIGHTS WHEN USED IN A SERIES FOR CHANNELIZATION. FLAGGER STATIONS SHALL BE ADEQUATELY ILLUMINATED AT NIGHT.

17. CONTRACTOR TO PROVIDE ACCESS AND/OR DIRECTION SIGNS TO REROUTE PEDESTRIAN TRAFFIC.

18. THE CONTRACTOR SHALL MAKE EVERY EFFORT TO MINIMIZE THE USE AND DURATION OF STEEL PLATES. ALL STEEL PLATES SHALL HAVE A NON-SKID SURFACING. THE COUNTY MAY REQUIRE THE BACKFILLING AND PATCHING OF THE TRENCH DUE TO THE EXCESSIVE USE OF STEEL PLATES.

19. THE CONTRACTOR SHALL PROVIDE AN ADEQUATE NON-SLIP BRIDGING MATERIAL, INCLUDING SHORING OVER TRENCHES IN PAVEMENT AREAS. THE BRIDGING SHALL BE ABLE TO SUPPORT ALL TYPES OF VEHICULAR AND PEDESTRIAN TRAFFIC.

20. WHERE PEDESTRIAN WALKWAYS EXIST, THEY SHALL BE MAINTAINED IN A SAFE AND PASSABLE CONDITION OR OTHER FACILITIES FOR PEDESTRIANS SHALL BE PROVIDED. PASSAGES BETWEEN WALKWAYS AT INTERSECTIONS SHALL LIKEWISE BE PROVIDED.

21. CONTRACTORS SHALL PROVIDE SAFE PASSAGE TO ALL MOTORISTS TURNING OUT OF ENTRANCE TO MOI ROAD AT ALL TIMES. FURTHER, THE CONTRACTOR SHALL PROVIDE A FLAGGER/POLICE OFFICER AT THE INTERSECTIONS.

22. THE CONTRACT SHALL MAKE A FLYER SHOWING THE CHANGES IN TRAFFIC PATTERNS AND ESTIMATED TIMES OF USE. SUFFICIENT COPIES OF THE FLYER SHALL BE PROVIDED TO EACH BUSINESS FOR DISTRIBUTION TO ITS EMPLOYEES AND GUESTS.

TABLE 1 FOR TRAFFIC CONTROL PLAN

POSTED SPEED LIMIT (M.P.H.)	SIGN SPACING (D) FEET	TAPER LENGTH (T) (FEET)		LONGITUDINAL BUFFER SPACE (8) (FEET)	SPACING OF CONES OR DELINEATORS (FEET)		
		W=12' OR LESS*	W=GREATER THAN 12'*		TAPER	TANGENT	WORK AREA
20	250	200	W X 17	35	20	20	10
25	250	200	W X 17	55	25	25	10
30	250	250	W X 20	85	30	30	10
35	250	250	W X 20	120	35	35	10
40	500	350	W X 30	170	40	40	10
45	500	550	W X 45	220	45	45	10
50	1000	600	W X 50	280	50	50	10
55	1000	700	W X 55	335	55	55	10

* W = WIDTH OF LANE, SHOULDER OR OFFSET

RICHARD Y. SANTO
LICENSED PROFESSIONAL ENGINEER
NO. 8955-C
HAWAII USA

This work was prepared by me or under my supervision and construction of this project will be under my observation. (Observation of construction as defined in Chapter 16-115, Subchapter 1 Definitions of the Hawaii Administrative Rules, Professional Engineers, Architects, Surveyors, and Landscape Architects)

signature — 4/30/24 expiration date of the license

NOTE: Contractor to check and verify dimensions at job before proceeding with work.

SSFM International
SSFM International, Inc.
501 Sumner Street
Suite 620
Honolulu, Hawaii 96817

REVISION	DATE	DESCRIPTION	MADE BY	APPROVED

PROJECT:
DEPARTMENT OF HAWAIIAN HOME LANDS
SITE AND INFRASTRUCTURE IMPROVEMENTS
FOR HANAPĒPĒ RESIDENTIAL LOTS, PHASE 2
TMK: (4) 1-8-007: 003 (PORTION) & (4) 2-8-007: 001 TO 050 (PORTION)
Hanapēpē, Waimea, Kaua'i, Hawai'i

CIVIL NOTES - 1

THIS DOCUMENT CONTAINS INFORMATION PROPRIETARY TO SSFM INTERNATIONAL, INC., AND IS FURNISHED IN CONFIDENCE FOR THE LIMITED PURPOSE OF EVALUATION, BIDDING OR REVIEW. THIS DOCUMENT OR ITS CONTENTS MAY NOT BE USED FOR ANY OTHER PURPOSE AND MAY NOT BE REPRODUCED OR DISCLOSED TO OTHERS WITHOUT THE PRIOR WRITTEN CONSENT OF SSFM INTERNATIONAL, INC.

DATE
NOVEMBER 2022

SHEET NUMBER
C-001

PRINTED: 11/8/22

W:_CIVIL 3D PROJECTS\2018_021.001 DHHL HANAPEPE RESIDENTIAL SUBDIVISION PHASE 2\01 CE DWG\C-001 CIVIL NOTES - 1.DWG 11/8/2022 9:09 AM EBORNALES

PAVEMENT AND TRENCH RESTORATION NOTES

1. TRENCH REPAVING SHALL BE A MINIMUM 8–INCHES THICK BASE COURSE AND 2–INCHES MINIMUM ASPHALT CONCRETE (STATE MIX V). IF THE EXISTING PAVEMENT STRUCTURE IS GREATER IN THICKNESS AND QUALITY, THE REPAVING SHALL MATCH THE EXISTING PAVEMENT STRUCTURE.
2. PAVEMENT RESURFACING WORK SHALL INCLUDE 2–INCH THICKNESS OF EXISTING A.C. TO BE COLD PLANED AND CONSTRUCTION OF A MINIMUM OF 2–INCH OF NEW A.C. (STATE MIX V) LAYER.
3. ROAD RESTORATION FOR TRENCHES ALIGNED ALONG THE LONGITUDINAL DIRECTION SHALL INCLUDE PAVEMENT RESURFACING AS FOLLOWS:
   - A. ROADS WITH PAVEMENT WIDTHS OF LESS THAN 12 FEET WIDE SHALL BE REPAVED THE ENTIRE WIDTH.
   - B. ROADWAYS BETWEEN 12 FEET AND 28 FEET WIDE WITH NO STRIPING SHALL BE PAVED FOR HALF OF THE ROADWAY.
   - C. ROADWAYS WITH NO STRIPING AND PAVEMENT WIDTHS GREATER THAN 28 FEET SHALL HAVE A 12–FOOT WIDE TRAVEL WAY RESURFACED.
4. ROAD RESTORATION FOR TRENCHES ALIGNED PERPENDICULAR TO THE ROADWAY SHALL INCLUDE ROAD RESURFACING FOR A MINIMUM OF 6 FEET BEYOND THE TRENCH EDGES.
5. THE ENTIRE ROAD INTERSECTION SHALL BE RESURFACED WHENEVER TRENCH REPAVING IS REQUIRED WITHIN ANY PORTION OF AN INTERSECTION. THE LIMITS OF RESURFACING SHALL BE THE CURVE RETURNS OF THE ROADWAYS OF THE INTERSECTIONS.
6. ALL EXISTING PAVEMENT STRIPING DISTURBED BY THIS PROJECT SHALL BE RESTORED. THE STRIPING MATERIALS SHALL BE THERMOPLASTIC TAPE OR THERMOPLASTIC EXTRUSION. PAINTING IS NOT ACCEPTABLE.
7. THE LIMITS OF ROAD RESTORATION WORK MAY BE REVISED BY THE ENGINEERING DIVISION OF THE COUNTY DEPARTMENT OF PUBLIC WORKS DURING PROCESSING OF ROAD PERMITS FOR THIS PROJECT.

NOTES FOR SUBDIVISION CONSTRUCTION AND IMPROVEMENTS THAT WILL BE OWNED OR MAINTAINED BY THE COUNTY

1. THE OWNER AND/OR SUBDIVIDER WILL BE RESPONSIBLE TO ENSURE THAT ALL MATERIALS INCORPORATED IN THE CONSTRUCTION ARE IN ACCORDANCE WITH THE PUBLICATIONS "HAWAI'I STANDARD SPECIFICATIONS FOR ROAD AND BRIDGE CONSTRUCTION, 2005" AND ITS AMENDMENTS, AND THE "STANDARD DETAILS FOR PUBLIC WORKS CONSTRUCTION, COUNTY OF KAUA'I, CITY AND COUNTY OF HONOLULU, COUNTY OF MAUI, AND COUNTY OF HAWAI'I DATED SEPTEMBER 1984" OR AS AMENDED. THE OWNER'S LICENSED DESIGN ENGINEERS AND/OR LICENSED ENGINEERS PERFORMING THE CONSTRUCTION MANAGEMENT WILL BE RESPONSIBLE TO REVIEW AND APPROVE ALL CONSTRUCTION MATERIAL SUBMITTALS FROM THE CONTRACTOR PRIOR TO INSTALLATION. AT THE COMPLETION OF CONSTRUCTION, THE OWNER AND/OR SUBDIVIDER WILL SUBMIT A CERTIFICATION FROM THEIR LICENSED DESIGN ENGINEERS AND/OR LICENSED ENGINEERS PERFORMING THEIR CONSTRUCTION MANAGEMENT THAT ALL MATERIALS INCORPORATED IN THE PROJECT MET THE REQUIREMENTS OF "HAWAI'I STANDARD SPECIFICATIONS FOR ROAD AND BRIDGE CONSTRUCTION, 2005" AND ITS AMENDMENTS, AND THE "STANDARD DETAILS FOR PUBLIC WORKS CONSTRUCTION, COUNTY OF KAUA'I, CITY AND COUNTY OF HONOLULU, COUNTY OF MAUI, AND COUNTY OF HAWAI'I DATED SEPTEMBER 1984 OR AS AMENDED
2. THE CONTRACTOR WILL BE REQUIRED TO INFORM THE DEPARTMENT OF PUBLIC WORKS CONSTRUCTION SECTION OF ANY PROPOSED CHANGES OR DEVIATIONS TO THE APPROVED CONSTRUCTION PLANS PRIOR TO PROCEEDING WITH ANY WORK THAT HAS NOT BEEN APPROVED. ANY AND ALL DEVIATIONS FROM THE APPROVED CONSTRUCTION PLANS WILL NEED TO BE APPROVED BY THE DEPARTMENT OF PUBLIC WORKS AND ANY OTHER AGENCY THAT MAY HAVE JURISDICTION FOR THE RESPECTIVE WORK AS DETERMINED BY THE DEPARTMENT OF PUBLIC WORKS PRIOR TO CONSTRUCTION.
3. NO WORK ON ANY APPROVED CHANGES WILL BE INSPECTED UNTIL PLANS OF THE APPROVED CHANGES ARE PROVIDED TO THE DEPARTMENT OF PUBLIC WORKS CONSTRUCTION SECTION.
4. UPON COMPLETION OF CONSTRUCTION, THE CONTRACTOR WILL CERTIFY THAT THE AS–BUILT DRAWINGS REPRESENT ALL CHANGES TO THE ORIGINAL APPROVED CONSTRUCTION PLANS. THE OWNER'S LICENSED DESIGN ENGINEER WILL CERTIFY THAT ALL OF THE CHANGES SHOWN ON THE AS–BUILT DRAWINGS MEET MINIMUM STANDARDS IN ACCORDANCE WITH THE PUBLICATIONS "HAWAI'I STANDARD SPECIFICATIONS FOR ROAD AND BRIDGE CONSTRUCTION, 2005" AND ITS AMENDMENTS, THE "STANDARD DETAILS FOR PUBLIC WORKS CONSTRUCTION, COUNTY OF KAUA'I, CITY AND COUNTY OF HONOLULU, COUNTY OF MAUI, AND COUNTY OF HAWAI'I DATED SEPTEMBER 1984" AS WELL AS THE REQUIREMENTS OF THE ORIGINAL APPROVED CONSTRUCTION PLANS.
5. ALL SURVEY AND LAYOUT IS TO BE PERFORMED UNDER THE SUPERVISION OF A LAND SURVEYOR LICENSED IN THE STATE OF HAWAI'I.
6. THE CONTRACTOR SHALL RETAIN THE SERVICES OF A GEOTECHNICAL ENGINEER FOR QUALITY CONTROL. CERTIFICATION FROM THE GEOTECHNICAL ENGINEER SHALL BE SUBMITTED TO THE DEPARTMENT OF PUBLIC WORKS AT THE COMPLETION OF THE CONSTRUCTION WORK. THE GEOTECHNICAL ENGINEER SHALL CERTIFY THAT THE CONSTRUCTION WORK MEETS THE REQUIREMENTS OF THE "HAWAI'I STANDARD SPECIFICATIONS FOR ROAD AND BRIDGE CONSTRUCTION, 2005" AND ITS AMENDMENTS, AND THE "STANDARD DETAILS FOR PUBLIC WORKS CONSTRUCTION, COUNTY OF KAUA'I, CITY AND COUNTY OF HONOLULU, COUNTY OF MAUI, AND COUNTY OF HAWAI'I DATED SEPTEMBER 1984" OR AS AMENDED AND THE APPROVED CONSTRUCTION PLANS. THE GEOTECHNICAL ENGINEER SHALL ALSO SUBMIT TEST RESULTS AS REQUESTED BY THE DEPARTMENT OF PUBLIC WORKS.
7. ALL SIDEWALKS OR SHARED USE PATHS SHALL BE REINFORCED BY WELDED WIRE OR FIBER AS DETERMINED BY THE DEPARTMENT OF PUBLIC WORKS.

WATER POLLUTION AND EROSION CONTROL NOTES (COUNTY)

1. GENERAL:
   - A. THE CONTRACTOR IS REMINDED OF THE REQUIREMENTS OF SECTION 209 – WATER POLLUTION AND EROSION CONTROL AND SECTION 620 –DUST CONTROL IN THE "HAWAI'I STANDARD SPECIFICATIONS FOR ROAD AND BRIDGE CONSTRUCTION 2005," AND ITS AMENDMENTS. SECTION 209 DESCRIBES BUT IS NOT LIMITED TO SUBMITTAL REQUIREMENTS; SCHEDULING OF A WATER POLLUTION AND EROSION CONTROL CONFERENCE WITH THE COUNTY; CONSTRUCTION REQUIREMENTS; METHOD OF MEASUREMENT; AND BASIS OF PAYMENT. NO WORK SHALL COMMENCE WITHOUT A BMP PLAN APPROVED BY THE DEPARTMENT OF HEALTH.
   - B. THE CONTRACTOR SHALL FOLLOW THE GUIDELINES IN THE "INTERIM BEST MANAGEMENT PRACTICES MANUAL FOR CONSTRUCTION SITES FOR THE COUNTY OF KAUA'I, APRIL 2004" IN DEVELOPING, INSTALLING AND MAINTAINING THE BEST MANAGEMENT PRACTICES (BMP'S) FOR THE PROJECT. THE CONTRACTOR MAY SUBMIT ALTERNATE METHODS TO THE COUNTY FOR ACCEPTANCE.
   - C. THE CONTRACTOR SHALL KEEP A COPY OF THE APPROVED BMP PLAN, NOI, ETC. ON THE PROJECT SITE. THE BMP PLAN SHALL BE UPDATED TO REFLECT ANY CHANGES MADE DURING THE COURSE OF CONSTRUCTION FOR THE DURATION OF THE PROJECT.
   - D. THE ENGINEER MAY ASSESS LIQUIDATED DAMAGES OF UP TO $27,500 FOR NON–COMPLIANCE OF EACH BMP REQUIREMENT AND EACH REQUIREMENT STATED IN SECTION 209, FOR EVERY DAY ON NON–COMPLIANCE. THERE IS NO MAXIMUM LIMIT ON THE AMOUNT ASSESSED PER DAY.
   - E. THE ENGINEER WILL DEDUCT THE COST FROM THE PROGRESS PAYMENT FOR ALL CITATIONS RECEIVED BY THE DEPARTMENT FOR NON–COMPLIANCE, OR THE CONTRACTOR/OWNER SHALL REIMBURSE THE STATE AND/OR COUNTY FOR THE FULL AMOUNT OF THE OUTSTANDING COST INCURRED BY THE STATE AND/OR COUNTY.
2. WASTE DISPOSAL:
   - A. WASTE MATERIALS: ALL WASTE MATERIALS SHALL BE COLLECTED AND STORED IN A SECURELY LIDDED METAL DUMPSTER THAT DOES NOT LEAK. THE DUMPSTER SHALL MEET ALL LOCAL AND STATE SOLID WASTE MANAGEMENT REGULATIONS. ALL TRASH AND CONSTRUCTION DEBRIS FROM THE SITE SHALL BE DEPOSITED IN THE DUMPSTER. THE DUMPSTER SHALL BE EMPTIED AT A MINIMUM OF TWICE PER WEEK OR AS OFTEN AS IS DEEMED NECESSARY. NO CONSTRUCTION WASTE MATERIAL SHALL BE BURIED ONSITE. THE CONTRACTOR'S SUPERVISORY PERSONNEL SHALL BE INSTRUCTED REGARDING THE CORRECT PROCEDURE FOR WASTE DISPOSAL. NOTICES STATING THESE PRACTICES SHALL BE POSTED IN THE OFFICE TRAILER AND THE CONTRACTOR SHALL BE RESPONSIBLE FOR SEEING THAT THESE PROCEDURES ARE FOLLOWED.
   - B. HAZARDOUS WASTE: ALL HAZARDOUS WASTE MATERIALS SHALL BE DISPOSED OF IN THE MANNER SPECIFIED BY LOCAL OR STATE REGULATIONS OR BY THE MANUFACTURER. THE CONTRACTORS SITE PERSONNEL SHALL BE INSTRUCTED IN THESE PRACTICES AND SHALL BE RESPONSIBLE FOR SEEING THAT THESE PRACTICES ARE FOLLOWED.
   - C. SANITARY WASTE: ALL SANITARY WASTE SHALL BE COLLECTED FROM THE PORTABLE UNITS A MINIMUM OF ONCE PER WEEK, OR AS REQUIRED.
3. EROSION AND SEDIMENT CONTROL INSPECTION AND MAINTENANCE PRACTICES:
   - A. ALL CONTROL MEASURES SHALL BE INSPECTED AT LEAST ONCE EACH WEEK AND WITHIN 24 HOURS FOLLOWING ANY RAINFALL EVENT OF 0.5 INCHES OR GREATER.
   - B. ALL MEASURES SHALL BE MAINTAINED IN GOOD WORKING ORDER. IF REPAIR IS NECESSARY, IT SHALL BE INITIATED WITHIN 24 HOURS AFTER THE INSPECTION.
   - C. BUILT UP SEDIMENT SHALL BE REMOVED FROM SILT FENCE WHEN IT HAS REACHED ONE–THIRD THE HEIGHT OF THE FENCE.
   - D. SILT SCREEN OR FENCE SHALL BE INSPECTED FOR DEPTH OF SEDIMENT, TEARS, TO VERIFY THAT THE FABRIC IS SECURELY ATTACHED TO THE FENCE POSTS OR CONCRETE SLAB AND TO VERIFY THAT THE FENCE POSTS ARE FIRMLY IN THE GROUND.
   - E. TEMPORARY AND PERMANENT SEEDING AND PLANTING SHALL BE INSPECTED FOR BARE SPOTS, WASH OUTS AND HEATHY GROWTH.
   - F. THE CONTRACTOR SHALL SUBMIT TO THE COUNTY A MAINTENANCE INSPECTION REPORT PROMPTLY AFTER EACH WEEKLY INSPECTION.
   - G. THE CONTRACTOR SHALL SELECT A MINIMUM OF THREE PERSONNEL WHO SHALL BE RESPONSIBLE FOR INSPECTION, MAINTENANCE AND REPAIR ACTIVITIES AND FILLING OUT THE INSPECTION AND MAINTENANCE REPORT.
   - H. PERSONNEL SELECTED FOR THE INSPECTION AND MAINTENANCE RESPONSIBILITIES SHALL RECEIVE TRAINING FROM THE CONTRACTOR. THEY SHALL BE TRAINED IN ALL THE INSPECTION AND MAINTENANCE PRACTICES NECESSARY FOR KEEPING THE EROSION AND SEDIMENT CONTROLS USED ONSITE IN GOOD WORKING ORDER.
   - I. ALL SLOPES AND EXPOSED AREAS SHALL BE GRASSED AS FINAL GRADES HAVE BEEN ESTABLISHED. GRADING TO FINAL GRADE SHALL BE CONTINUOUS, AND ANY AREA IN WHICH WORK HAS BEEN INTERRUPTED OR DELAYED OR EXPOSED FOR MORE THAN 15 DAYS SHALL BE GRASSED IN ORDER TO PREVENT DUST EMISSION, EROSION AND SILT RUNOFF. AREAS WITH IMPORTED SOILS SHALL BE GRASSED NOT MORE THAN 5 WORKING DAYS AFTER THE FINAL GRADES HAVE BEEN ESTABLISHED.
   - J. TEMPORARY EROSION CONTROL SHALL NOT BE REMOVED BEFORE PERMANENT EROSION CONTROLS ARE IN–PLACE AND ESTABLISHED.
4. GOOD HOUSEKEEPING BEST MANAGEMENT PRACTICES:
   - A. MATERIALS POLLUTION PREVENTION PLAN:
     - a. APPLICABLE MATERIALS OR SUBSTANCES LISTED BELOW ARE EXPECTED TO BE PRESENT ONSITE DURING CONSTRUCTION. OTHER MATERIALS AND SUBSTANCES NOT LISTED BELOW SHALL BE ADDED TO THE INVENTORY OF THE CONSTRUCTION CONTRACTOR'S SITE–SPECIFIC BMP PLAN.

CONCRETE	FERTILIZERS
DETERGENTS	PETROLEUM BASED PRODUCTS
PAINTS (ENAMEL AND LATEX)	CLEANING SOLVENTS
METAL STUDS	WOOD
TAR	MASONRY BLOCK

     - b. MATERIAL MANAGEMENT PRACTICES SHALL BE USED TO REDUCE THE RISK OF SPILLS OR OTHER ACCIDENTAL EXPOSURE OF MATERIALS AND SUBSTANCES TO STORM WATER RUNOFF. AN EFFORT SHALL BE MADE TO STORE ONLY ENOUGH PRODUCTS AS IS REQUIRED TO DO THE JOB.
     - c. ALL MATERIALS STORED ONSITE SHALL BE STORED IN A NEAT, ORDERLY MANNER IN THEIR APPROPRIATE CONTAINERS AND IF POSSIBLE UNDER A ROOF OR OTHER ENCLOSURE.
     - d. PRODUCTS SHALL BE KEPT IN THEIR ORIGINAL CONTAINERS WITH THE ORIGINAL MANUFACTURES LABEL.
     - e. SUBSTANCES SHALL NOT BE MIXED WITH ONE ANOTHER UNLESS RECOMMENDED BY THE MANUFACTURER.
     - f. A PRODUCT SHALL BE USED UP COMPLETELY BEFORE DISPOSING OF THE CONTAINER.
     - g. MANUFACTURER'S RECOMMENDATIONS FOR PROPER USE AND DISPOSAL SHALL BE FOLLOWED.
     - h. THE CONTRACTOR SHALL CONDUCT A DAILY INSPECTION TO ENSURE PROPER USE AND DISPOSAL OF MATERIALS ONSITE.
   - B. HAZARDOUS MATERIAL POLLUTION PREVENTION PLAN:
     - a. PRODUCTS SHALL BE KEPT IN ORIGINAL CONTAINERS UNLESS THEY ARE NOT RESEALABLE.
     - b. ORIGINAL LABELS AND MATERIAL SAFETY DATA SHEETS (MSDS) SHALL BE RETAINED AND MADE AVAILABLE TO THE COUNTY UPON REQUEST.
     - c. SURPLUS PRODUCTS SHALL BE DISPOSED OF ACCORDING TO MANUFACTURER'S INSTRUCTIONS OR LOCAL AND STATE RECOMMENDED REGULATIONS.
   - C. ONSITE AND OFFSITE PRODUCTS SPECIFIC PLANS:

     THE FOLLOWING PRODUCTS SPECIFIC PRACTICES SHALL BE FOLLOWED ONSITE:
     - a. PETROLEUM BASED PRODUCTS: ALL ONSITE VEHICLES SHALL BE MONITORED FOR LEAKS AND RECEIVED REGULAR PREVENTIVE MAINTENANCE TO REDUCE THE CHANCE OF LEAKAGE. PETROLEUM PRODUCTS SHALL BE STORED IN TIGHTLY SEALED CONTAINERS WHICH ARE CLEARLY LABELED. ANY ASPHALT SUBSTANCES USED ONSITE SHALL BE APPLIED ACCORDING TO THE MANUFACTURER'S RECOMMENDATION.
     - b. FERTILIZERS: APPLY FERTILIZERS USED ONLY IN THE MINIMUM AMOUNTS RECOMMENDED BY THE MANUFACTURER. ONCE APPLIED, WORK FERTILIZER INTO THE SOIL TO LIMIT EXPOSURE TO STORM WATER. STORAGE SHALL BE KEPT IN A COVERED SHED. TRANSFER THE CONTENTS OF ANY PARTIALLY USED BAGS OF FERTILIZER TO A SEALABLE PLASTIC BIN TO AVOID SPILLS.
     - c. PAINTS: SEAL AND STORE ALL CONTAINERS WHEN NOT REQUIRED FOR USE. DO NOT DISCHARGE EXCESS PAINT TO THE ROADWAY DRAINAGE SYSTEM. DISPOSE PROPERLY ACCORDING TO THE MANUFACTURER'S INSTRUCTION OR STATE AND LOCAL REGULATIONS.
     - d. CONCRETE TRUCKS: WASH OUT OR DISCHARGE CONCRETE TRUCK DRUM WASH WATER ONLY AT A DESIGNATED SITE. DO NOT DISCHARGE WATER IN THE ROADWAY DRAINAGE SYSTEM OR WATERS OF THE UNITED STATES. CONTACT DRINKING WATER BRANCH, DEPARTMENT OF HEALTH AT (808) 586–4309 TO RECEIVE PERMISSION TO DESIGNATE A DISPOSAL SITE. CLEAN DISPOSAL SITE AS REQUIRED OR AS REPRESENTED BY THE OWNER'S REPRESENTATIVE.
   - D. SPILL CONTROL PLAN:
     - a. POST A SPILL PREVENTION PLAN TO INCLUDE MEASURES TO PREVENT AND CLEAN UP EACH SPILL.
     - b. THE CONTRACTOR SHALL BE THE PREVENTION AND CLEAN–UP COORDINATOR. DESIGNATE AT LEAST THREE SITE PERSONNEL WHO SHALL RECEIVE SPILL PREVENTION AND CLEANUP TRAINING. THESE INDIVIDUALS SHALL EACH BECOME RESPONSIBLE FOR A PARTICULAR PHASE OF PREVENTION AND CLEANUP. POST THE NAMES OF RESPONSIBLE SPILL PERSONNEL IN THE MATERIAL STORAGE AREA AND IN THE OFFICE TRAILER ONSITE.
     - c. CLEARLY POST MANUFACTURER'S RECOMMENDED METHODS FOR SPILL CLEANUP. MAKE SITE PERSONNEL AWARE OF THE PROCEDURES AND THE LOCATION OF INFORMATION AND CLEANUP SUPPLIES.
     - d. KEEP MATERIAL AND EQUIPMENT NECESSARY FOR SPILL CLEANUP IN THE MATERIAL STORAGE AREA ONSITE.
     - e. CLEAN UP ALL SPILLS IMMEDIATELY AFTER DISCOVERY.
     - f. KEEP THE SPILL AREA WELL VENTILATED. PERSONNEL SHALL WEAR APPROPRIATE PROTECTIVE CLOTHING TO PREVENT INJURY FROM CONTACT WITH HAZARDOUS SUBSTANCES.
     - g. REPORT SPILLS OF TOXIC HAZARDOUS MATERIAL TO THE APPROPRIATE STATE OR LOCAL GOVERNMENT AGENCY, REGARDLESS OF SIZE.
5. NATIONAL POLLUTANT DISCHARGE ELIMINATION SYSTEM (NPDES) REQUIREMENTS:
   - A. THE CONTRACTOR SHALL APPLY FOR, OBTAIN AND COMPLY WITH THE NATIONAL POLLUTANT DISCHARGE ELIMINATION SYSTEM (NPDES) REQUIREMENTS FOR KAUA'I DISTRICT PERMIT PROJECTS. THIS IS AVAILABLE AT THE KAUA'I DISTRICT OFFICE AT 3040 UMI STREET, SUITE 205. DUE TO POTENTIAL COSTS AND IMPACTS, THE CONTRACTOR NEEDS TO BE AWARE OF THESE REQUIREMENTS.
   - B. THE CONTRACTOR SHALL OBTAIN AND COMPLY WITH NATIONAL POLLUTANT DISCHARGE ELIMINATION SYSTEM (NPDES) PERMIT REQUIREMENTS FOR ALL PROJECTS WHICH WILL DISTURB ONE (1) ACRE OR MORE OF LAND. THE CONTRACTOR SHALL NOT START CONSTRUCTION UNTIL NOTICE OF GENERAL PERMIT COVERAGE (NGPC) IS RECEIVED FROM THE DEPARTMENT OF HEALTH, STATE OF HAWAI'I AND HAS SATISFIED ANY OTHER APPLICABLE REQUIREMENTS OF THE NPDES PERMIT PROGRAM.
   - C. THE CONTRACTOR SHALL COMPLETE AND SUBMIT A CONTRACTOR'S CERTIFICATION OF NPDES COMPLIANCE, INCLUDING COMPLETION OF THE BEST MANAGEMENT PRACTICE (BMP) CHECKLIST AND SUBMITTAL OF A WRITTEN BMP PLAN AND DRAWINGS, PRIOR TO ISSUANCE OF THE PERMIT TO PERFORM WORK UPON COUNTY ROADWAYS.

GRADING NOTES

TEMPORARY DUST CONTROL MEASURES FOR GRADING

1. THE GRADED OR PROJECT SITE THAT IS CLEARED OF VEGETATION SHALL BE KEPT DAMP WITH WATER CONTINUOUSLY FOR SEVEN (7) DAYS A WEEK. AT THE END OF EACH DAY, THE SITE SHALL BE SUFFICIENTLY DAMPENED WITH WATER ON A CONTINUAL BASIS SO THAT THE SITE WILL REMAIN MOISTENED DURING THE NIGHT.
2. THE CONTRACTOR SHALL CONDUCT HIS OPERATIONS SO THAT EXCAVATION, EMBANKMENT AND IMPORTED MATERIAL SHALL BE DAMPENED WITH WATER ON A CONTINUAL BASIS TO PREVENT DUST PROBLEMS.
3. IN APPLYING FOR A GRADING PERMIT, THE CONTRACTOR SHALL SUBMIT PLANS, SCHEDULES AND/OR WRITTEN MEASURES WHICH PROVIDES FOR DUST CONTROL. THE DUST CONTROL MEASURES SHALL CONTAIN POSITIVE STATEMENTS WHICH REQUIRE ACTIONS OR WORK THAT PREVENT DUST PROBLEMS. NO PERMIT WILL BE ISSUED UNLESS THE COUNTY IS ASSURED THAT DUST AND EROSION PROBLEMS WILL BE MINIMIZED.

TEMPORARY EROSION CONTROL MEASURES FOR GRADING

1. TEMPORARY VEGETATIVE COVER SHALL BE PLANTED WITHIN A PERIOD OF 30 CALENDAR DAYS AFTER THE SITE HAS BEEN GRADED OR BARED OF VEGETATION OR IF THE SITE WILL BE SUSPENDED FOR MORE THAN 30 CALENDAR DAYS.
2. TEMPORARY VEGETATIVE COVER SHALL CONSIST OF 40 LBS. COMMON RYE GRASS SEED PER ACRE, 400 LBS. PER ACRE 10–10–10 OR EQUIVALENT FERTILIZER WORKED INTO THE SEED BED BEFORE PLANTING. TEMPORARY SPRINKLER SYSTEMS IS TO BE INSTALLED CONCURRENTLY WITH ALL PLANTINGS. PLANTING AND MAINTENANCE OF GRASS SHALL CONFORM TO THE "HAWAI'I STANDARD SPECIFICATIONS FOR ROAD AND BRIDGE CONSTRUCTION, 2005" AND ITS AMENDMENTS.

PERMANENT EROSION CONTROL MEASURES FOR GRADING

1. THE CONTRACTOR SHALL GRASS THE ENTIRE PROJECT SITE, EXCEPT PAVED AREAS WITH BERMUDA GRASS SPRIGS. THE GRASS SHALL BE PLANTED, FERTILIZED, AND MAINTAINED IN ACCORDANCE WITH THE "HAWAI'I STANDARD SPECIFICATIONS FOR ROAD AND BRIDGE CONSTRUCTION, 2005" AND ITS AMENDMENTS.
2. THE CONTRACTOR SHALL GRASS ALL EXPOSED AREAS THAT HAVE BEEN CONSTRUCTED TO FINAL GRADES WITHIN A PERIOD OF 30 CALENDAR DAYS.
3. IN LIEU OF GRASS SPRIGS (NOTE 1), THE CONTRACTOR MAY USE HYDROMULCH SEEDING AND IRRIGATION SPRINKLER SYSTEM.

GRADING PHASES

1. WHEN GRADING WORK IS DONE IN PHASES, THE ENGINEER MUST ACCEPT THE COMPLETED PHASE PRIOR TO START OF WORK ON THE NEXT PHASE. EVEN AFTER A COMPLETED PHASE HAS BEEN ACCEPTED, THE GRASSING OR OTHER MEANS OF STABILIZATION MUST BE MAINTAINED UNTIL PROJECT COMPLETION.

RICHARD Y. SANTO
LICENSED PROFESSIONAL ENGINEER
NO. 8955–C
HAWAII USA

This work was prepared by me or under my supervision and construction of this project will be under my observation. (Observation of construction as defined in Chapter 16–115, Subchapter 1 Definitions of the Hawaii Administrative Rules, Professional Engineers, Architects, Surveyors, and Landscape Architects)

signature 4/30/24 expiration date of the license

NOTE: Contractor to check and verify dimensions at job before proceeding with work.

SSFM International
SSFM International, Inc.
501 Sumner Street
Suite 620
Honolulu, Hawaii 96817

REVISION	DATE	DESCRIPTION	MADE BY	APPROVED

PROJECT:
DEPARTMENT OF HAWAIIAN HOME LANDS
SITE AND INFRASTRUCTURE IMPROVEMENTS
FOR HANAPĒPĒ RESIDENTIAL LOTS, PHASE 2
TMK: (4) 1-8-007: 003 (PORTION) & (4) 2-8-007: 001 TO 050 (PORTION)
Hanapēpē, Waimea, Kaua'i, Hawai'i

CIVIL NOTES - 2

THIS DOCUMENT CONTAINS INFORMATION PROPRIETARY TO SSFM INTERNATIONAL, INC., AND IS FURNISHED IN CONFIDENCE FOR THE LIMITED PURPOSE OF EVALUATION, BIDDING OR REVIEW. THIS DOCUMENT OR ITS CONTENTS MAY NOT BE USED FOR ANY OTHER PURPOSE AND MAY NOT BE REPRODUCED OR DISCLOSED TO OTHERS WITHOUT THE PRIOR WRITTEN CONSENT OF SSFM INTERNATIONAL, INC.

DATE
NOVEMBER 2022

SHEET NUMBER
C-002

PRINTED: 11/8/22

W:_CIVIL 3D PROJECTS\2018_021.001 DHHL HANAPEPE RESIDENTIAL SUBDIVISION PHASE 2\01 CE DWG\C-002 CIVIL NOTES - 2.DWG 9/12/2022 10:11 AM FFORNALES

WATER CONSTRUCTION NOTES:

1. UNLESS OTHERWISE SPECIFIED, ALL MATERIALS AND CONSTRUCTION OF WATER FACILITIES AND APPURTENANCES SHALL BE IN ACCORDANCE WITH THE "WATER SYSTEM STANDARDS", 2002, AS ADOPTED BY THE DEPARTMENT OF WATER, COUNTY OF KAUA'I, INCLUDING ALL SUBSEQUENT AMENDMENTS AND ADDITIONS.

2. ALL REQUIRED PROJECT SUBMITTALS (MATERIALS, SHOP DRAWINGS, CHLORINATION PLAN, ETC.) SHALL BE APPROVED BY THE DEPARTMENT CONSTRUCTION MANAGEMENT DIVISION BEFORE A PRECONSTRUCTION CONFERENCE CAN BE SCHEDULED. ONCE ALL PROJECT SUBMITTALS HAVE BEEN APPROVED BY DOW CONSTRUCTION ENGINEER, THE DOW CONSTRUCTION ENGINEER WILL NOTIFY THE CONTRACTOR THAT A PRECONSTRUCTION CONFERENCE CAN BE ARRANGED. THE CONTRACTOR SHALL ARRANGE A PRECONSTRUCTION CONFERENCE AT LEAST TEN (10) CALENDAR DAYS BEFORE CONSTRUCTION AND SHALL NOTIFY THE DEPARTMENT OF WATER AT LEAST THREE (3) WORKING DAYS PRIOR TO START OF CONSTRUCTION.

3. THE CONTRACTOR SHALL SUBMIT THE NAMES AND TELEPHONE NUMBERS OF ITS AUTHORIZED JOB SUPERINTENDENT AND AT LEAST THREE (3) ADDITIONAL PERSONS TO CONTACT IN CASE OF AN EMERGENCY DURING NON-WORKING HOURS.

4. THE CONTRACTOR SHALL NOTIFY THE DEPARTMENT OF WATER AT LEAST 24 HOURS PRIOR TO ANY TRENCHING, PIPE LAYING, BACKFILLING, TESTING OR DISINFECTION ACTIVITIES TO INSURE THAT INSPECTION SERVICES WILL BE AVAILABLE.

5. ALL MATERIALS (PIPE, LUBRICANTS, PAINTS, SEALANTS, FORM OIL, CONCRETE ADMIXTURES, ETC.) IN DIRECT CONTACT WITH THE POTABLE WATER SHALL HAVE NATIONAL SANITATION FOUNDATION (NSF) CERTIFICATIONS. THE CONTRACTOR SHALL SUBMIT THESE CERTIFICATIONS TO THE DEPARTMENT OF WATER FOR REVIEW AND APPROVAL PRIOR TO ITS APPLICATION.

6. THE LOCATION OF EXISTING WATER MAINS AND APPURTENANCES SHOWN ON THE PLANS ARE APPROXIMATE ONLY. THE CONTRACTOR SHALL VERIFY THE EXACT LOCATIONS IN THE FIELD. EXCAVATION AROUND ANY EXISTING WATER MAIN SHALL BE DONE BY HAND.

7. THE CONTRACTOR SHALL PROVIDE UNOBSTRUCTED ACCESS TO EXISTING HYDRANTS, VALVES AND WATER METERS AT ALL TIMES.

8. THE CONTRACTOR SHALL SECURE ALL EXCAVATIONS IN ACCORDANCE WITH OSHA REGULATIONS.

9. THERE SHALL BE NO PHYSICAL CONNECTION BETWEEN A PUBLIC OR PRIVATE POTABLE WATER SYSTEM AND A NON-POTABLE WATER SYSTEM, SEWER, OR APPURTENANCE THERETO WHICH COULD PERMIT THE PASSAGE OF ANY SEWAGE OR POLLUTED WATER INTO THE POTABLE WATER SUPPLY.

10. TRENCH EXCAVATION, BACKFILLING IN LIFTS, AND REPAVING SHALL CONFORM TO THE "HAWAI'I STANDARD SPECIFICATIONS FOR ROAD AND BRIDGE CONSTRUCTION, 2005" AS AMENDED.

11. WARNING TAPE SHALL BE IN ACCORDANCE WITH DIVISION 200, SECTION 212.08 OF THE "WATER SYSTEM STANDARDS". THE WARNING TAPE SHALL BE FOUR MIL THICK, NON-METALLIC, ACID AND ALKALI RESISTANT POLYETHYLENE AND 6-INCHES WIDE WITH MINIMUM STRENGTH OF 1,750 PSI LENGTHWISE AND 1,500 PSI CROSSWISE. TAPE COLOR SHALL BE "SAFETY PRECAUTION BLUE" AND SHALL BEAR A CONTINUOUS PRINTED INSCRIPTION "CAUTION WATER LINE BURIED BELOW". INSCRIPTION SHALL BE 2-INCHES HIGH, BLACK TEXT.

12. ALL HYDRANTS SHALL RECEIVE A MINIMUM SSPC SP3 SURFACE PREPARATION AND COATED IN ACCORDANCE WITH DIVISION 200, SECTION 206.01 OF THE "WATER SYSTEM STANDARDS".

13. UNLESS OTHERWISE DIRECTED, PRIOR TO THE CONNECTION OF ANY PIPELINE AND/OR LATERALS TO THE EXISTING MAIN, THE PIPELINES/LATERALS INSTALLED SHALL BE CLEANED, PRESSURE TESTED, CHLORINATED, FLUSHED, AND SAMPLED IN ACCORDANCE WITH DIVISION 300, SECTIONS 302.27 TO 302.29 OF THE "WATER SYSTEM STANDARDS".

    A. WATER SAMPLES SHALL BE TESTED FOR TOTAL COLIFORMS BY A LABORATORY CERTIFIED BY THE STATE OF HAWAI'I TO PERFORM COLIFORM ANALYSIS. PRESENCE OF COLIFORM BACTERIA IS UNACCEPTABLE.

    B. IN ADDITION TO THE TEST FOR COLIFORMS, A SEPARATE TEST FOR HETEROTROPHIC PLATE COUNT (HPC) SHALL BE CONDUCTED. THE HPC COUNT SHALL BE LESS THAN 300 CFU/ML.

    C. PRIOR TO CHLORINATION, A WATER CHLORINATION AND SANITATION CONTRACTOR WITH A C-37D LICENSE SHALL SUBMIT A CHLORINATION PLAN WITH WATER SOURCE, INJECTION POINTS, SAMPLING POINTS AND PROCEDURE CLEARLY DEFINED FOR APPROVAL BY THE DOW.

    D. THE TESTED PIPELINES AND/OR LATERALS MUST BE CONNECTED TO THE EXISTING DOW SYSTEM WITHIN 14 CALENDAR DAYS OF PULLING THE FIRST DISINFECTION SAMPLE TESTED BY A CERTIFIED LABORATORY. THE DEPARTMENT OF WATER WILL REQUIRE THE CONTRACTOR TO REDO THE CLEANING, PRESSURE TESTING, AND/OR DISINFECTION OF THE WATERLINE AT THE CONTRACTOR'S EXPENSE IF THE CONNECTION IS NOT COMPLETED WITHIN THESE 14 CALENDAR DAYS.

14. POLYURETHANE FOAM "PIGS" SHALL BE "PUSHED" THROUGH THE LENGTH OF THE INSTALLED PIPELINE USING PRESSURIZED WATER.

15. ALL CONNECTIONS SHALL BE SCHEDULED IN COORDINATION WITH THE DEPARTMENT OF WATER.
    A. AN ADVANCE DEPOSIT IS REQUIRED FOR OPERATING VALVES, FLUSHING LINES AND NOTIFYING CONSUMERS AFFECTED BY A WATER SHUTDOWN DURING CONNECTIONS. THE CONTRACTOR WILL BE CHARGED THE ACTUAL COST.
    B. THE CONTRACTOR SHALL PLACE THE DEPOSIT PRIOR TO SCHEDULING THE CONNECTION DATE.
    C. SHUTDOWN CONNECTIONS SHALL BE SCHEDULED ON TUESDAYS THROUGH THURSDAYS. NO CONNECTIONS SHALL BE SCHEDULED ON MONDAYS, FRIDAYS, WEEKENDS AND HOLIDAYS, OR FROM DECEMBER 18 – JANUARY 8 OF EACH YEAR.
    D. ALL MATERIALS SHALL BE ON HAND AND APPROVED BY THE ENGINEER PRIOR TO SCHEDULING THE CONNECTION DATE.
    E. PUMPS USED TO DE-WATER THE CONNECTION AREA SHALL BE OPERATED IN THE PRESENCE OF THE ENGINEER PRIOR TO SCHEDULING THE CONNECTION DATE.
    F. ALL CONNECTIONS SHALL BE PERFORMED IN THE PRESENCE OF THE ENGINEER.
    G. NO LIVE TAPS SHALL BE SCHEDULED FROM DECEMBER 24 – DECEMBER 31 OF EACH YEAR

16. IN ORDER TO PREVENT DAMAGE TO THE POLYETHYLENE ENCASEMENT FROM EXCESSIVE HANDLING, THE POLYWRAP SHALL BE INSTALLED AROUND THE BARREL OF THE DUCTILE IRON PIPE AT ITS FINAL LOCATION ALONG THE TRENCHLINE. THE POLYETHYLENE ENCASED PIPE SHALL BE LIFTED USING A FABRIC TYPE SLING OR A SUITABLY PADDED CABLE OR CHAIN TO PREVENT DAMAGE TO THE POLYETHYLENE.

17. THE CONTRACTOR SHALL TAKE ALL NECESSARY COMPACTION TESTS WHILE THE WATERLINE TRENCH IS BEING BACKFILLED AND WHILE THE SUBBASE/BASECOURSE IS BEING PLACED. IF THE TEST RESULTS INDICATE THAT ADDITIONAL COMPACTION IS REQUIRED, THE CORRECTIVE WORK SHALL BE COMPLETED BEFORE ANY ADDITIONAL TRENCH EXCAVATION OR PLACING OF SUBBASE/ BASECOURSE IS ALLOWED.

    THE CONTRACTOR SHALL RETAIN THE SERVICES OF A REGISTERED GEOTECHNICAL ENGINEER FOR QUALITY CONTROL. THE COMPACTION TEST RESULTS SHALL BE CERTIFIED BY THE GEOTECHNICAL ENGINEER AND SUBMITTED TO THE DEPARTMENT OF WATER, STATE HIGHWAYS DIVISION (FOR WORK DONE WITHIN STATE R/W) AND THE DEPARTMENT OF PUBLIC WORKS (FOR WORK DONE WITHIN COUNTY R/W). THE GEOTECHNICAL ENGINEER SHALL CERTIFY THAT THE COMPACTION RESULTS MEET THE REQUIREMENTS OF THE CURRENT STANDARD SPECIFICATIONS FOR ROAD AND BRIDGE CONSTRUCTION.

18. THE CONTRACTOR SHALL CONNECT ALL EXISTING CONSUMER PIPING TO THE NEW SERVICE LATERALS. THE DEPARTMENT OF WATER WILL TRANSFER THE EXISTING WATER METERS ONLY.

19. ALL FITTINGS SHALL BE MECHANICAL JOINT (MJ) AT EACH END UNLESS OTHERWISE NOTED. "MEGALUG" RETAINER GLANDS SHALL BE USED WITH ALL MECHANICAL JOINT FITTINGS AND VALVES USED IN CONNECTING NEW WATER MAINS TO EXISTING WATER MAINS UNLESS OTHERWISE NOTED.

20. ALL WATER VALVES THAT WILL BE ABANDONED IN PLACE SHALL BE PLACED IN THE "CLOSED" POSITION. REMOVE TOP SECTION OF VALVE BOX AND CONCRETE SETTLEMENT SLAB. FILL REMAINDER OF VALVE BOX WITH CONCRETE. PLACE BACKFILL AND REPAIR PAVEMENT SECTION TO APPLICABLE STATE OR COUNTY STANDARDS. BACKFILL TO FINISH GRADE IN ROAD SHOULDER AREA.

21. THE CONTRACTOR SHALL OBTAIN ALL APPLICABLE DEPARTMENT OF HEALTH PERMITS PRIOR TO THE START OF CONSTRUCTION. PERMITS INCLUDE, BUT ARE NOT LIMITED TO, NATIONAL POLLUTION DISCHARGE ELIMINATION SYSTEM (NPDES) PERMITS FOR STORM WATER, HYDROSTATIC TEST, DEWATERING, AND FOR CONSTRUCTION ACTIVITIES, INCLUDING CLEARING, GRADING, AND EXCAVATION, THAT RESULT IN THE DISTURBANCE OF EQUAL TO OR GREATER THAN ONE (1) ACRE OF TOTAL LAND AREA.

    THE CONTRACTOR SHALL BE RESPONSIBLE FOR THE PROPER DISPOSAL OF STORM WATER DISCHARGES AND EFFLUENT ASSOCIATED WITH CONSTRUCTION ACTIVITIES, INCLUDING HYDROTESTING AND DISINFECTION OPERATIONS, TO SAFEGUARD PUBLIC HEALTH AND SAFETY IN ACCORDANCE WITH APPLICABLE DEPARTMENT OF HEALTH REQUIREMENTS. ALL PERMITS AND LICENSES FOR STORM WATER AND CONSTRUCTION WATER DISPOSAL, INCLUDING ALL APPLICATION, CHARGES, FEES, AND TAXES ARE THE RESPONSIBILITY OF THE CONTRACTOR.

22. THE CONTRACTOR IS RESPONSIBLE FOR DEWATERING TRENCH AS NECESSARY WHERE GROUNDWATER IS ENCOUNTERED. ALL ASSOCIATED COSTS FOR DEWATERING SHALL BE BORNE BY THE CONTRACTOR.

23. FOR DOW PROJECTS, THE USE OF KNOWN SEWER PUMP TRUCKS IS PROHIBITED FOR ANY USE, INCLUDING BUT NOT LIMITED TO DEWATERING AND TESTING OF NEW FACILITIES.

24. THE CONTRACTOR SHALL VERIFY OUTSIDE DIAMETER OF ALL EXISTING ASBESTOS-CEMENT (A.C.) WATERLINES TO BE CONNECTED. CONTRACTOR SHALL VERIFY USE OF PROPER GASKETS PRIOR TO CONNECTION. A.C. PIPE AND GASKET INFORMATION SHALL BE SUBMITTED TO ENGINEER FOR APPROVAL.

25. ALL REMOVAL, DISPOSAL AND CONNECTION WORK THAT INVOLVES ASBESTOS PIPE/MATERIAL SHALL BE DONE IN THE PRESENCE OF OR BY A LICENSED ASBESTOS CONTRACTOR.

    THE LICENSED ASBESTOS CONTRACTOR SHALL SUBMIT THEIR PLAN FOR ALL ASSOCIATED REMOVAL, DISPOSAL AND CONNECTION WORK FOR THE PROJECT TO DOW FOR REVIEW AND APPROVAL PRIOR TO CONDUCTING THE WORK.

26. ALL CONNECTIONS TO EXISTING A.C. PIPE SHALL BE AT THE NEAREST A.C. PIPE JOINT. A.C. PIPE SHALL BE REMOVED BY ENTIRE LENGTH(S) TO FACILITATE THE CONNECTION. CUTTING OF A.C. PIPE IS PROHIBITED.

27. THE CONTRACTOR SHALL FOLLOW ALL APPLICABLE OSHA, HIOSH AND FEDERAL REGULATIONS IN HANDLING AND DISPOSAL OF ASBESTOS-CEMENT PIPE. DISPOSAL OF THE PIPE SHALL BE AT AN APPROVED ASBESTOS MATERIAL DISPOSAL SITE.

28. ALL WATERWORKS BRASS FITTINGS SHALL BE IN COMPLIANCE WITH THE AMENDED SECTION 1417 OF THE SAFE DRINKING WATER ACT (SDWA) WHICH TAKES EFFECT ON JANUARY 4, 2014. THE AMENDMENT INCLUDES A CHANGE TO THE DEFINITION OF "LEAD-FREE" BY REDUCING LEAD CONTENT FROM 8% TO A WEIGHTED AVERAGE OF NOT MORE THAN 0.25% IN THE WETTED SURFACE MATERIAL. ALL WATERWORKS BRASS FITTINGS INSTALLED FOR POTABLE WATER SERVICE ON JANUARY 4, 2014 AND BEYOND SHALL CONFORM TO THE AMENDED DEFINITION OF "LEAD-FREE."

    AS INDICATED IN SECTION 211 OF THE "WATER SYSTEM STANDARDS" – BRASS PRODUCTS, ALL BRASS FITTINGS SHALL CONFORM TO NSF STANDARD 61 AND SECTION 1417 OF THE SAFE DRINKING WATER ACT (SDWA). IN ADDITION, ALL BRASS FITTINGS SHALL CONFORM TO NSF STANDARD 372.

29. CONTRACTOR SHALL INSTALL WATER FACILITIES ONLY AFTER REACHING FINAL SUBGRADE OR HIGHER. THE DEPARTMENT OF WATER WILL NOT ALLOW INSTALLATION OF ANY WATER FACILITIES UNTIL THE FINAL SUBGRADE LAYER AT MINIMUM HAS BEEN ACHIEVED.

30. PRIOR TO INSTALLATION OF NEW WATER LINES AND/OR FACILITIES, THE CONTRACTOR SHALL HAVE ALL FACILITIES SURVEYED AND STAKED OUT BY A LICENSED SURVEYOR AND THE CONTRACTOR SHALL EXPOSE, VERIFY, AND BACKFILL ALL EXISTING UNDERGROUND UTILITIES AND STRUCTURES IN CLOSE PROXIMITY TO CROSSINGS AND CONNECTIONS PRIOR TO EXCAVATION OF PIPELINE TRENCH. CONTRACTOR SHALL PROVIDE THE LICENSED SURVEYOR CUT SHEET AND THE PROBING INFORMATION TO THE DOW CONSTRUCTION ENGINEER FOR REVIEW AND APPROVAL BEFORE MOVING FORWARD WITH INSTALLATION VIA THE SUBMITTAL REVIEW PROCESS.

31. THE DEPARTMENT SHALL BE PROVIDED TWENTY (20) WORKING DAYS FOR ALL SUBMITTAL REVIEWS FROM THE TIME OF SUBMISSION BY THE CONTRACTOR.

APPROVED:

FOR MANAGER AND CHIEF ENGINEER, DEPT. OF WATER   DATE
COUNTY OF KAUA'I

RICHARD Y. SANTO
LICENSED PROFESSIONAL ENGINEER
NO. 8955-C
HAWAII USA

This work was prepared by me or under my supervision and construction of this project will be under my observation. (Observation of construction as defined in Chapter 16-115, Subchapter 1 Definitions of the Hawaii Administrative Rules, Professional Engineers, Architects, Surveyors, and Landscape Architects)

signature   4/30/24 expiration date of the license

NOTE: Contractor to check and verify dimensions at job before proceeding with work.

SSFM International
SSFM International, Inc.
501 Sumner Street
Suite 620
Honolulu, Hawai'i 96817

REVISION	DATE	DESCRIPTION	MADE BY	APPROVED

PROJECT:
DEPARTMENT OF HAWAIIAN HOME LANDS
SITE AND INFRASTRUCTURE IMPROVEMENTS
FOR HANAPĒPĒ RESIDENTIAL LOTS, PHASE 2
TMK: (4) 1-8-007: 003 (PORTION) & (4) 2-8-007: 001 TO 050 (PORTION)
Hanapēpē, Waimea, Kaua'i, Hawai'i

CIVIL NOTES - 3

THIS DOCUMENT CONTAINS INFORMATION PROPRIETARY TO SSFM INTERNATIONAL, INC., AND IS FURNISHED IN CONFIDENCE FOR THE LIMITED PURPOSE OF EVALUATION, BIDDING OR REVIEW. THIS DOCUMENT OR ITS CONTENTS MAY NOT BE USED FOR ANY OTHER PURPOSE AND MAY NOT BE REPRODUCED OR DISCLOSED TO OTHERS WITHOUT THE PRIOR WRITTEN CONSENT OF SSFM INTERNATIONAL, INC.

DATE
NOVEMBER 2022

SHEET NUMBER
C-003

PRINTED: 11/8/22
W:_CIVIL 3D PROJECTS\2018_021.001 DHHL HANAPEPE RESIDENTIAL SUBDIVISION PHASE 2\01 CE DWG\C-003 CIVIL NOTES - 3.DWG 10/26/2022 10:25 AM EBORNALES

SEWER NOTES

1. ALL SEWER CONSTRUCTION SHALL BE PERFORMED IN ACCORDANCE WITH THE COUNTY OF KAUA'I "SEWER DESIGN STANDARDS," DATED JUNE 1973 AND THE HAWAI'I STANDARD SPECIFICATION FOR ROAD, BRIDGE AND PUBLIC WORKS CONSTRUCTION, 1994".

2. IN THE EVENT THAT ANY CHANGE IN ALIGNMENT OR GRADE FOR THE PROPOSED SEWERS ARE REQUIRED DUE TO UNFORESEEN CONFLICT WITH OTHER UTILITIES, THE CONTRACTOR SHALL NOTIFY THE OWNER'S REPRESENTATIVE WHO IN TURN WILL BE RESPONSIBLE FOR THE REQUIRED CHANGES.

3. THE CONTRACTOR SHALL VERIFY THE LOCATION AND INVERT OF ALL EXISTING UTILITIES WHETHER SHOWN OR NOT SHOWN AS REQUIRED.

4. CRUSHED ROCK CRADLE IS PERMITTED WHERE SOIL IS STABLE. IN AREAS OF UNSTABLE SOIL, THE MAKER OF THE PLANS AND THE CONSTRUCTION ENGINEER WILL DETERMINE THE PIPE SUPPORT REQUIRED.

5. THE UNDERGROUND PIPES, CABLES OR DUCTLINES KNOWN TO EXIST BY THE ENGINEER FROM HIS RESEARCH OF RECORDS ARE INDICATED ON THE PLANS. THE CONTRACTOR SHALL VERIFY THE LOCATION AND DEPTH OF THE FACILITIES, INCLUDING AND AFFECTING SEWER LINES, IN THE PRESENCE OF THE WASTEWATER INSPECTOR AND EXERCISE PROPER CARE IN EXCAVATING THE AREA. THE CONTRACTOR SHALL BE RESPONSIBLE AND SHALL PAY FOR ALL DAMAGED UTILITIES.

6. SEWER LATERALS SHALL BE CLEAR OF AND NOT CONFLICTING WITH ANY OTHER UTILITY. MINIMUM HORIZONTAL AND VERTICAL CLEARANCE SHALL BE STRICTLY OBSERVED AND FOLLOWED.

7. SLOPE FOR SEWER LATERALS SHALL BE A MINIMUM OF 1.00% PER KAUA'I COUNTY CODE SEC. 25-9.3 UNLESS OTHERWISE SPECIFIED ON THE PLANS.

8. THE CONTRACTOR SHALL BE RESPONSIBLE FOR ANY SEWAGE SPILLS CAUSED DURING CONSTRUCTION. THE CONTRACTOR SHALL NOTIFY THE STATE DEPARTMENT OF HEALTH AND UTILIZE APPROPRIATE SAMPLING AND ANALYZING PROCEDURES. THE CONTRACTOR SHALL BE RESPONSIBLE FOR ALL PUBLIC NOTIFICATIONS AND PRESS RELEASES.

9. THE CONTRACTOR SHALL INSTALL "RAINSTOPPER" MANHOLE INSERTS IN ALL SEWER MANHOLES WITH TYPE "SA" FRAME AND COVER.

10. S4C PIPE CRADLE SEALS SHALL BE INSTALLED 10 FEET FROM ALL SEWER MANHOLES TO PREVENT SOIL MIGRATION. SEE DETAIL 7/C-507.

11. CONFINED SPACE

    FOR ENTRY BY CITY PERSONNEL, INCLUDING INSPECTORS, INTO A PERMIT REQUIRED CONFINED SPACE AS DEFINED IN 29 CFR PART 1910.146(B), THE CONTRACTOR SHALL BE RESPONSIBLE FOR PROVIDING:

    - ALL SAFETY EQUIPMENT REQUIRED BY THE CONFINED SPACE REGULATIONS APPLICABLE TO ALL PARTIES OTHER THAN THE CONSTRUCTION INDUSTRY, TO INCLUDE, BUT NOT LIMITED TO, THE FOLLOWING:

      A. FULL BODY HARNESSES FOR UP TO TWO PERSONNEL.
      B. LIFELINE AND ASSOCIATED CLIPS.
      C. INGRESS/EGRESS AND FALL PROTECTION EQUIPMENT.
      D. TWO-WAY RADIOS (WALKIE-TALKIES) IF OUT OF LINE-OF-SIGHT.
      E. EMERGENCY (ESCAPE) RESPIRATOR (10 MINUTE DURATION).
      F. CELLULAR TELEPHONE TO CALL FOR EMERGENCY ASSISTANCE.
      G. CONTINUOUS GAS DETECTOR (CALIBRATED) TO MEASURE OXYGEN, HYDROGEN SULFIDE, CARBON.
      H. PERSONAL MULTI-GAS DETECTOR TO BE CARRIED BY INSPECTOR.

    - CONTINUOUS FORCED AIR VENTILATION ADEQUATE TO PROVIDE SAFE ENTRY CONDITIONS.

    - ONE ATTENDANT/RESCUE PERSONNEL TOPSIDE (TWO, IF CONDITIONS WARRANT IT).

12. WHEN CONNECTING TO A LIVE SEWER LINE, THE CONTRACTOR SHALL ABIDE BY ALL CONDITIONS THAT THE STATE DEPARTMENT OF HEALTH SETS FORTH TO MITIGATE ANY WASTEWATER SPILL THAT MAY OCCUR. THE CONTRACTOR SHALL INFORM THE CITY INSPECTOR FIVE (5) WORKING DAYS PRIOR TO THE ACTUAL CONNECTION. THE CONTRACTOR SHALL BE RESPONSIBLE FOR ANY FINES AND PENALTIES DUE TO ANY SPILLS RESULTING FROM THE CONNECTION.

13. NO RUNGS SHALL BE INSTALLED INSIDE NEW SEWER MANHOLES.

14. THE CONTRACTOR SHALL MAINTAIN VISIBILITY AND MAINTENANCE ACCESS TO LIVE SEWER MANHOLE LOCATIONS AT ALL TIMES, INCLUDING DURING NON-WORK HOURS AND PAVING OPERATIONS.

15. DHHL WILL NEED TO ENTER INTO AN AGREEMENT WITH THE COUNTY ON EACH INCREMENTAL PHASE THAT WILL REQUIRE SEWER SERVICE.

16. ALL COUNTY WASTEWATER FEES (INCLUDING WTCA AND SCC FEES) WILL NEED TO BE PAID OR SATISFIED BEFORE ANY SEWER SERVICE CONNECTION CAN BE MADE.

17. UPON FINAL INSPECTION, THE DESIGN ENGINEER WILL PROVIDE SIGNED "AS-BUILT PLANS" CERTIFYING THAT ALL SEWER CONSTRUCTION WORK WILL BE INSPECTED, TESTED AND INSTALLED AS PER APPROVED CONSTRUCTION PLANS AND SPECIFICATIONS. THE COUNTY WASTEWATER DIVISION WILL RESERVE THE RIGHT FRO RANDOM INSPECTIONS AND FINAL ACCEPTANCE OF CONSTRUCTION. THE WASTEWATER DIVISION SHALL HAVE ACCESS TO THE WORK AT ALL TIMES DURING ITS CONSTRUCTION AND SHALL BE FURNISHED WITH EVERY REASONABLE FACILITY FOR ASCERTAINING THAT THE MATERIALS USED AND THE WORKMANSHIP ARE IN ACCORDANCE WITH THE STANDARDS ESTABLISHED BY THE DIVISION.

18. THE CONDITIONS OF THE SEWER ORDINANCE SEC. 25-7.4 ACCEPTANCE NEED TO BE MET, SHOULD THE SEWER IMPROVEMENTS BE CONVEYED TO THE COUNTY.

19. THE CONTRACTOR SHALL PROVIDE RECORDED SEWER CAMERA INSPECTION OF THE FINAL COMPLETED GRAVITY SEWER LINES TO THE COUNTY WASTEWATER DIVISION BEFORE FINAL ACCEPTANCE IS GRANTED.

20. A FINAL CERTIFIED "AS-BUILT" WITH ALL TOP AND INVERT ELEVATIONS FOR ALL SEWER IMPROVEMENTS WILL BE SUBMITTED TO THE WASTEWATER DIVISION.

21. THE CONTRACTOR SHALL PROVIDE TWO STAND-BY (SPARE) PUMPS FOR THE EXISTING SEWER PUMP STATIONS ON KAUMUALI'I ROAD AS PART OF THE CONSTRUCTION CONTRACT. THE CONTRACTOR SHALL COORDINATE WITH THE COUNTY ON THE PUMPS (I.E., MANUFACTURER AND SIZE).

SEWER PUMP REPLACEMENT NOTES:

1. THE CONTRACTOR SHALL PROVIDE A BACKUP OPEN TRAILER-MOUNTED CENTRIFUGAL SOLIDS-HANDLING PUMP AND DIESEL ENGINE INCLUSIVE OF A 60-GALLON FUEL TANK FOR THE EXISTING RIVERSIDE SEWER PUMP STATION (SPS) NO. 1 AND A BACKUP OPEN SKID-MOUNTED CENTRIFUGAL SOLIDS-HANDLING PUMP AND DIESEL ENGINE INCLUSIVE OF A 150-GALLON FUEL TANK FOR THE FIRE STATION SPS NO. 2).

2. THE BACKUP 4-INCH PUMP FOR THE RIVERSIDE SPS NO. 1 SHALL BE THE GODWIIN CD103M OPEN ISUZU 4LE2T, T4F, 60-GALLON FUEL TANK, TRAILER-MOUNTED AND PRIME GUARD OR APPROVED EQUAL.

3. THE BACKUP 6-INCH PUMP FOR THE FIRE STATION SPS NO. 2 SHALL BE THE GODWIIN CD160M OPEN JOHN DEERE 4045HFC04, T4F, 150-GALLON FUEL TANK, SKID-MOUNTED AND PRIME GUARD OR APPROVED EQUAL.

4. EXISTING PUMPS INFORMATION:

   A. SPS NO. 1: 4-INCH GODWIN PUMP, TYPE CD: 103M DRI-PRIME PUMP, SERIAL NO.: 18647839/04.

   B. SPS NO. 2: 6-INCH GODWIN PUMP, TYPE: CD: 160M DR-PRI PUMP, SERIAL NO.: 19086496/01.

5. THE SEWER PUMPS SHALL BE STORED IN THE COUNTY'S WAREHOUSE OR AS DIRECTED BY THE WASTEWATER DIVISION.

6. CONTACT INFORMATION FOR THE COUNTY OF KAUAI, PUBLIC WORKS IS AS FOLLOWS:
   WASTEWATER DIVISION
   3190 NININI POINT STREET
   LĪHUʻE, KAUA1, HI 96766
   PHONE: 808-652-0982
   EMAIL: JNAKASHIMA@KAUAI.GOV

7. REFER TO SPECIFICATION SECTION 02530 - SANITARY SEWER SYSTEM.

ENVIRONMENTAL NOTES FOR GRADING

1. IN ACCORDANCE WITH CHAPTER 11-60.1, AIR POLLUTION CONTROL, TITLE 11, HAWAI'I ADMINISTRATIVE RULES, THE PROPERTY OWNER/DEVELOPER SHALL BE RESPONSIBLE FOR ENSURING THAT EFFECTIVE CONTROL MEASURES ARE PROVIDED TO MINIMIZE OR PREVENT ANY VISIBLE DUST EMISSION CAUSED BY THE CONSTRUCTION WORK FROM IMPACTING THE SURROUNDING AREAS INCLUDING THE OFF-SITE ROADWAYS USED TO ENTER/EXIT THE PROJECT. THESE MEASURES INCLUDE BUT ARE NOT LIMITED TO THE USE OF WATER WAGONS, SPRINKLER SYSTEMS, DUST FENCES, ETC.

2. IN ACCORDANCE WITH CHAPTER 11-55, WATER POLLUTION CONTROL AND CHAPTER 11-54, WATER QUALITY STANDARDS, TITLE 11, HAWAI'I ADMINISTRATIVE RULES, THE PROPERTY OWNER/DEVELOPER SHALL BE RESPONSIBLE FOR ENSURING THAT THE BEST MANAGEMENT PRACTICE (BMP) TO MINIMIZE OR PREVENT THE DISCHARGE OF SEDIMENTS, DEBRIS AND OTHER WATER POLLUTANT INTO STATE WATERS ARE PROVIDED AT ALL TIMES.

3. IN ACCORDANCE WITH CHAPTER 11-58, SOLID WASTE MANAGEMENT CONTROL, TITLE 11, HAWAI'I ADMINISTRATIVE RULES, THE PROPERTY OWNER/DEVELOPER SHALL BE RESPONSIBLE FOR ENSURING THAT GRUB MATERIAL, DEMOLITION WASTE AND CONSTRUCTION WASTE GENERATED BY THE PROJECT ARE DISPOSED OF IN A MANNER OR AT A SITE APPROVED BY THE STATE DEPARTMENT OF HEALTH. DISPOSAL OF ANY OF THESE WASTES BY BURNING IS PROHIBITED.

4. THE CONTRACTOR SHALL BE RESPONSIBLE FOR OBTAINING AND PAYING FOR ALL APPLICABLE PERMITS FROM THE DEPARTMENT OF HEALTH INCLUDING BUT NOT LIMITED TO NATIONAL POLLUTANT DISCHARGE ELIMINATION SYSTEM (NPDES), NOTICE OF INTENT AND GENERAL PERMIT FOR STORM WATER, HYDROSTATIC TEST AND DEWATERING DISCHARGES PRIOR TO COMMENCING CONSTRUCTION. NPDES PERMIT SHALL BE REQUIRED PRIOR TO GRADING OR GRUBBING WORK OVER AN AREA OF ONE ACRE OR MORE.

5. AFTER EACH RAINFALL EVENT, THE CONTRACTOR SHALL REMOVE ALL SILT AND DEBRIS RESULTING FROM HIS WORK AND DEPOSITED IN DRAINAGE FACILITIES, ROADWAYS AND OTHER AREAS. THE COST INCURRED FOR ANY NECESSARY REMEDIAL ACTION BY THE COUNTY ENGINEER SHALL BE PAYABLE BY THE CONTRACTOR.

6. BEST MANAGEMENT PRACTICES (BMP'S) SHALL BE EMPLOYED AT ALL TIMES TO THE MAXIMUM EXTENT PRACTICABLE TO PREVENT DAMAGE BY SEDIMENTATION, EROSION OR DUST TO STREAMS, WATERCOURSE, NATURAL AREAS AND THE PROPERTY OF OTHERS.

7. IN ACCORDANCE WITH CHAPTER 11-46, COMMUNITY NOISE, HAWAI'I ADMINISTRATIVE RULES, THE PROPERTY OWNER/DEVELOPER SHALL BE RESPONSIBLE FOR PROVIDING EFFECTIVE CONTROL MEASURES TO MINIMIZE OR PREVENT CONSTRUCTION RELATED NOISE FROM IMPACTING THE RESIDENTS IN THE IMMEDIATE AREA. IF REQUIRED, NOISE REDUCTION MEASURES SHALL BE IMPLEMENTED BY THE CONTRACTOR DURING THE CONSTRUCTION WORK.

8. THE PROPERTY MAY HARBOR RODENTS WHICH WILL BE DISPERSED TO THE SURROUNDING AREAS WHEN THE SITE IS CLEARED. IN ACCORDANCE WITH CHAPTER 11-26, ENTITLED VECTOR CONTROL OF TITLE 11, HAR, THE APPLICANT SHALL ASCERTAIN THE PRESENCE OR ABSENCE OF RODENTS ON THE PROPERTY. SHOULD THE PRESENCE OF RODENTS BE DETERMINED, THE APPLICANT SHALL ERADICATE THE RODENTS PRIOR TO CLEARING THE SITE.

9. A COPY OF THE PLANS, CONSTRUCTION SCHEDULE AND/OR WRITTEN MEASURES THAT IS REQUIRED TO BE SUBMITTED BY THE CONTRACTOR (DUST CONTROL MEASURES/PLANS) SHOULD ALSO BE SENT TO THE DEPARTMENT OF HEALTH FOR MONITORING PURPOSES.

DEPARTMENT OF HEALTH (DOH) NOTES:

1. SANITATION
   A. NOISE WILL BE GENERATED DURING THE DEMOLITION AND CONSTRUCTION PHASE OF THIS PROJECT. THE APPLICABLE MAXIMUM PERMISSIBLE SOUND LEVELS AS STATED IN TITLE 11, HAR CHAPTER 11-46, "COMMUNITY NOISE CONTROL", SHALL NOT BE EXCEEDED UNLESS A NOISE PERMIT IS OBTAINED FROM THE DEPARTMENT OF HEALTH

   B. ANY WASTE THAT IS GENERATED BY THE PROJECT SHALL BE DISPOSED OF AT A SOLID WASTE DISPOSAL FACILITY THAT COMPLIES WITH THE APPLICABLE PROVISIONS OF TITLE 11, HAR, CHAPTER 11-58.1 "SOLID WASTE MANAGEMENT CONTROL", THE OPEN BURNING OF ANY OF THESE WASTES ON OR OFF-SITE IS PROHIBITED.

   C. ACCORDING TO HAR §11-26-35, NO PERSON, FIRM, OR CORPORATION SHALL DEMOLISH OR CLEAR ANY STRUCTURE, PLACE, OR VACANT LOT WITHOUT FIRST ASCERTAINING THE PRESENCE OR ABSENCE OF RODENTS THAT MAY ENDANGER PUBLIC HEALTH BY DISPERSAL FROM SUCH PREMISES. SHOULD ANY SUCH INSPECTION REVEAL THE PRESENCE OF RODENTS, THE RODENTS SHALL BE ERADICATED BEFORE DEMOLISHING OR CLEARING THE STRUCTURE, SITE, OR VACANT LOT. A DEMOLITION OR LAND CLEARING PERMIT IS REQUIRED WITH A APPLICATION FEE OR $25 DUE AT FILING.

2. WASTEWATER
   A. THIS SUBDIVISION IS DESIGNED FOR REGULATED PUBLIC SEWER SYSTEM CONNECTION ONLY, INDIVIDUAL WASTEWATER SYSTEMS CANNOT BE USED.

3. CLEAN AIR
   A. ACTIVITIES MUST COMPLY WITH THE PROVISIONS OF HAWAI'I ADMINISTRATIVE RULES, §11-60.1-33 ON FUGITIVE DUST WHEN APPLICABLE.

4. CLEAN WATER
   A. ANY PROJECT AND ITS POTENTIAL IMPACTS TO STATE WATERS MUST MEET THE STATE'S:
      i. ANTI-DEGRADATION POLICY, WHICH REQUIRES THAT THE EXISTING USES AND THE LEVEL OF WATER QUALITY NECESSARY TO PROTECT THE EXISTING USES OF THE RECEIVING STATE WATER BE MAINTAINED AND PROTECTED;
      ii. DESIGNATED USES, AS A DETERMINED BY THE CLASSIFICATION OF THE RECEIVING STATE WATERS;
      iii. AND WATER QUALITY CRITERIA [HAWAI'I ADMINISTRATIVE RULES (HAR), CHAPTER 11-54].

   B. A SECTION 401 WATER QUALITY CERTIFICATION (WQC) IS REQUIRED IF YOUR PROJECT/ACTIVITY:
      - REQUIRES A FEDERAL PERMIT, LICENSE, CERTIFICATE, APPROVAL, REGISTRATION, OR STATUTORY EXEMPTION; AND
      - MAY RESULT IN A DISCHARGE INTO STATE WATERS. THE TERM "DISCHARGE" IS DEFINED IN CLEAN WATER ACT, SUBSECTIONS 502(16), 502(12), AND 502(6). EXAMPLES OF "DISCHARGE" INCLUDE, BUT ARE NOT LIMITED TO, ALLOWING THE FOLLOWING POLLUTANTS TO ENTER STATE WATERS FROM THE SURFACE OR IN-WATER: SOLID WASTE, ROCK/SAND/DIRT, HEAT, SEWAGE, CONSTRUCTION DEBRIS, ANY UNDERWATER WORK, CHEMICALS, FUGITIVE DUST/SPRAY PAINT, AGRICULTURAL WASTES, BIOLOGICAL MATERIALS, INDUSTRIAL WASTES, CONCRETE/SEALANT/EPOXY, AND WASHING/CLEANING EFFLUENT.

      DETERMINE IF YOUR PROJECT/ACTIVITY REQUIRES A FEDERAL PERMIT, LICENSE, CERTIFICATE, APPROVAL, REGISTRATION, OR STATUTORY EXEMPTION BY CONTRACTING THE APPROPRIATE FEDERAL AGENCIES (E.G. DEPARTMENT OF THE ARMY (DA), U.S. ARMY CORPS OF ENGINEERS (COE), PACIFIC OCEAN DIVISION HONOLULU DISTRICT OFFICE (POH) TEL:808-835-4303; U.S. ENVIRONMENTAL PROTECTION AGENCY TEL; 415-947-8021; FEDERAL ENERGY REGULATORY COMMISSION TEL: 866-208-3372; U.S. COASTAL GUARD OFFICE OF BRIDGE PROGRAMS TEL: 202-372-1511).

   C. ACCORDING TO STATE LAW, ALL DISCHARGES RELATE TO THE PROJECT CONSTRUCTION OR OPERATION ACTIVITIES, WHETHER OR NOT NPDES PERMIT COVERAGE AND/OR SECTION 401 WQC ARE REQUIRED, MUST COMPLY WITH THE STATE'S WATER QUALITY STANDARDS.

RICHARD Y. SANTO
LICENSED PROFESSIONAL ENGINEER
NO. 8955-C
HAWAII USA

This work was prepared by me or under my supervision and construction of this project will be under my observation. (Observation of construction as defined in Chapter 16-115, Subchapter 1 Definitions of the Hawaii Administrative Rules, Professional Engineers, Architects, Surveyors, and Landscape Architects)
signature 4/30/24 expiration date of the license

NOTE: Contractor to check and verify dimensions at job before proceeding with work.

SSFM International
SSFM International, Inc.
501 Sumner Street
Suite 620
Honolulu, Hawaii 96817

REVISION	DATE	DESCRIPTION	MADE BY	APPROVED

PROJECT:
DEPARTMENT OF HAWAIIAN HOME LANDS
SITE AND INFRASTRUCTURE IMPROVEMENTS
FOR HANAPĒPĒ RESIDENTIAL LOTS, PHASE 2
TMK: (4) 1-8-007: 003 (PORTION) & (4) 2-8-007: 001 TO 050 (PORTION)
Hanapēpē, Waimea, Kauaʻi, Hawaiʻi

CIVIL NOTES - 4

THIS DOCUMENT CONTAINS INFORMATION PROPRIETARY TO SSFM INTERNATIONAL, INC., AND IS FURNISHED IN CONFIDENCE FOR THE LIMITED PURPOSE OF EVALUATION, BIDDING OR REVIEW. THIS DOCUMENT OR ITS CONTENTS MAY NOT BE USED FOR ANY OTHER PURPOSE AND MAY NOT BE REPRODUCED OR DISCLOSED TO OTHERS WITHOUT THE PRIOR WRITTEN CONSENT OF SSFM INTERNATIONAL, INC.

DATE
NOVEMBER 2022

SHEET NUMBER
C-004

PRINTED: 11/8/22

W:_CIVIL 3D PROJECTS\2018_021.001 DHHL HANAPEPE RESIDENTIAL SUBDIVISION PHASE 2\01 CE DWG\C-004 CIVIL NOTES - 4.DWG 10/26/2022 10:33 AM EBORNALES

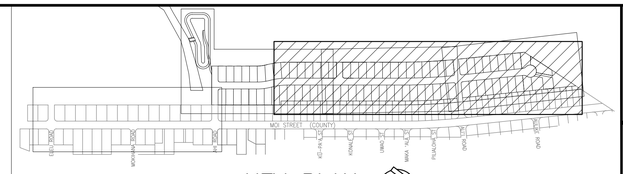

KEY PLAN
NOT TO SCALE

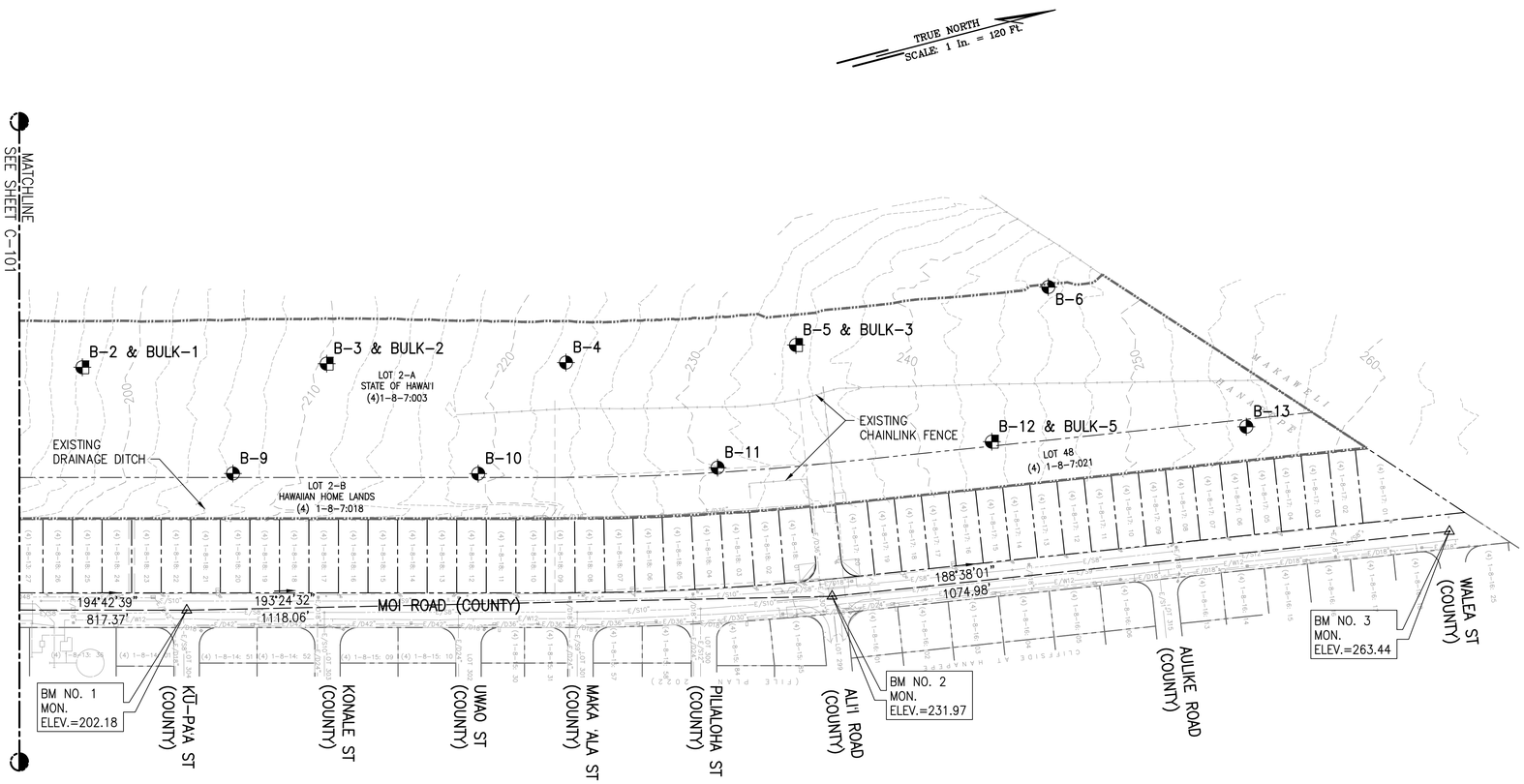

EXISTING CONDITION PLAN – 1

SCALE: 1" = 120'

NOTES:

1. ALL VISIBLE UTILITY STRUCTURES HAVE BEEN LOCATED IN THE FIELD, HOWEVER, CONNECTION OF UNDERGROUND UTILITY LINES AS SHOWN ARE UNVERIFIED AND COMPILED FROM EXISTING DATA.
2. UNDERGROUND UTILITIES SHOWN HEREON ARE FOR INFORMATION ONLY, HAVING BEEN OBTAINED FROM THE BEST AVAILABLE SOURCES BUT FROM OTHERS NOT CONNECTED WITH THIS COMPANY. THEREFORE, NO GUARANTEE IS MADE ON THE ACCURACY OR COMPLETENESS OF SAID INFORMATION.

LEGEND:

- PROPERTY LINE
- 260 EXIST MAJOR CONTOUR
- EXIST MINOR CONTOUR
- E/D18" EXIST DRAINLINE
- E/S8" EXIST SEWERLINE
- E/W8" EXIST WATERLINE
- E/EL EXIST ELEC. LINE
- EXIST CHAIN LINK FENCE
- PROJECT LIMITS
- APPROXIMATE BORING LOCATION
- APPROXIMATE INFILTRATION TEST LOCATION
- APPROXIMATE BULK SAMPLE LOCATION

GRAPHIC SCALE:

100' 50' 0 100' 200'

SCALE: 1" = 120'

RICHARD Y. SANTO
LICENSED PROFESSIONAL ENGINEER
NO. 8955-C
HAWAII USA

This work was prepared by me or under my supervision and construction of this project will be under my direction. (Discretion of construction as defined in Chapter 14-115, Subchapter 2, Definitions of the Hawaii Administrative Rules, Professional Engineers, Architects, Surveyors, and Landscape Architects)

4/30/24
signature
expiration date of the license

NOTE: Contractor to check and verify dimensions at job before proceeding with work.

SSFM International
SSFM International, Inc.
501 Sumner Street
Suite 620
Honolulu, Hawaii 96817

REVISION	DATE	DESCRIPTION	MADE BY	APPROVED

PROJECT:
DEPARTMENT OF HAWAIIAN HOME LANDS
SITE AND INFRASTRUCTURE IMPROVEMENTS
FOR HANAPĒPĒ RESIDENTIAL LOTS, PHASE 2
TMK: (4) 1-8-007: 003 (PORTION) & (4) 2-8-007: 001 TO 050 (PORTION)
Hanapēpē, Waimea, Kaua'i, Hawai'i

EXISTING CONDITION PLAN - 1

THIS DOCUMENT CONTAINS INFORMATION PROPRIETARY TO SSFM INTERNATIONAL, INC., AND IS FURNISHED IN CONFIDENCE FOR THE LIMITED PURPOSE OF EVALUATION, BIDDING OR REVIEW. THIS DOCUMENT OR ITS CONTENTS MAY NOT BE USED FOR ANY OTHER PURPOSE AND MAY NOT BE REPRODUCED OR DISCLOSED TO OTHERS WITHOUT THE PRIOR WRITTEN CONSENT OF SSFM INTERNATIONAL, INC.

DATE
NOVEMBER 2022

SHEET NUMBER
C-100

7 OF 109 SHEETS

W:_CIVIL 3D PROJECTS\2018_021.001 DHHL HANAPEPE RESIDENTIAL SUBDIVISION PHASE 2\01 CE DWG\C-100 - C-101 EXISTING CONDITION PLANS.DWG 11/14/2022 11:13 AM
FRORNALES

PRINTED: 11/14/22

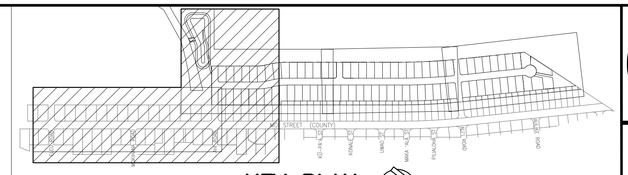

KEY PLAN
NOT TO SCALE

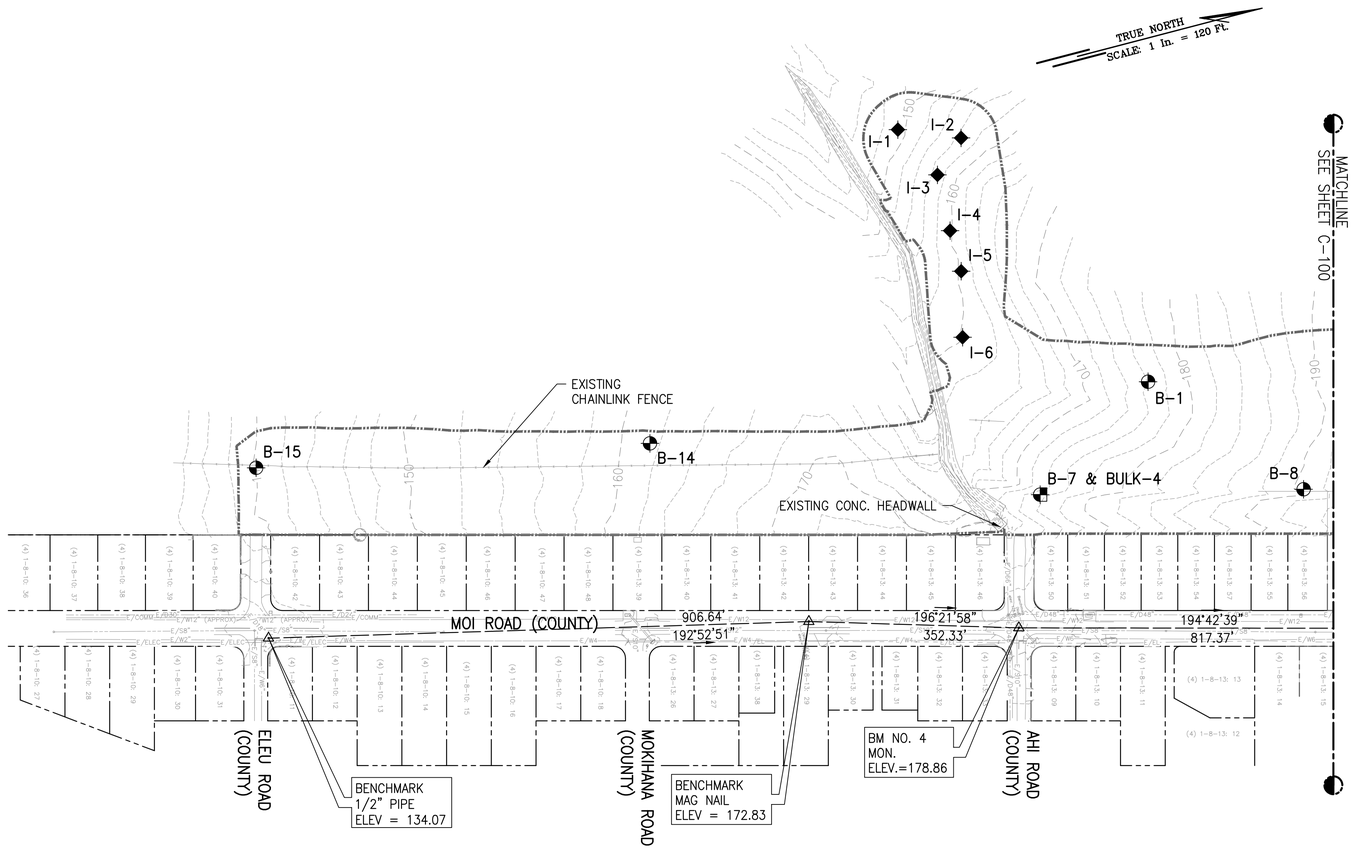

EXISTING CONDITION PLAN – 2
SCALE: 1" = 120'

NOTES:

1. ALL VISIBLE UTILITY STRUCTURES HAVE BEEN LOCATED IN THE FIELD, HOWEVER, CONNECTION OF UNDERGROUND UTILITY LINES AS SHOWN ARE UNVERIFIED AND COMPILED FROM EXISTING DATA.
2. UNDERGROUND UTILITIES SHOWN HEREON ARE FOR INFORMATION ONLY, HAVING BEEN OBTAINED FROM THE BEST AVAILABLE SOURCES BUT FROM OTHERS NOT CONNECTED WITH THIS COMPANY. THEREFORE, NO GUARANTEE IS MADE ON THE ACCURACY OR COMPLETENESS OF SAID INFORMATION.

LEGEND:

- PROPERTY LINE
- 260 EXIST MAJOR CONTOUR
- EXIST MINOR CONTOUR
- E/D18" EXIST DRAINLINE
- E/S8" EXIST SEWERLINE
- E/W8" EXIST WATERLINE
- E/EL EXIST ELEC. LINE
- EXIST CHAIN LINK FENCE
- PROJECT LIMITS
- APPROXIMATE BORING LOCATION
- APPROXIMATE INFILTRATION TEST LOCATION
- APPROXIMATE BULK SAMPLE LOCATION

GRAPHIC SCALE:
100' 50' 0 100' 200'
SCALE: 1" = 120'

RICHARD Y. SANTO
LICENSED PROFESSIONAL ENGINEER
NO. 8955-C
HAWAII USA

This work was prepared by me or under my supervision and construction of this project will be under my observation. (Discretion of construction as defined in Chapter 16-115, Subsection 16-115, Definition of the Hawaii Administrative Rules, Professional Engineers, Architects, Surveyors, and Landscape Architects)
4/30/24
signature
expiration date of the license

NOTE: Contractor to check and verify dimensions at job before proceeding with work.

SSFM International
SSFM International, Inc.
501 Sumner Street
Suite 620
Honolulu, Hawaii 96817

REVISION	DATE	DESCRIPTION	MADE BY	APPROVED

PROJECT:
DEPARTMENT OF HAWAIIAN HOME LANDS
SITE AND INFRASTRUCTURE IMPROVEMENTS
FOR HANAPĒPĒ RESIDENTIAL LOTS, PHASE 2
TMK: (4) 1-8-007: 003 (PORTION) & (4) 2-8-007: 001 TO 050 (PORTION)
Hanapēpē, Waimea, Kaua'i, Hawai'i

EXISTING CONDITION PLAN - 2

THIS DOCUMENT CONTAINS INFORMATION PROPRIETARY TO SSFM INTERNATIONAL, INC., AND IS FURNISHED IN CONFIDENCE FOR THE LIMITED PURPOSE OF EVALUATION, BIDDING OR REVIEW. THIS DOCUMENT OR ITS CONTENTS MAY NOT BE USED FOR ANY OTHER PURPOSE AND MAY NOT BE REPRODUCED OR DISCLOSED TO OTHERS WITHOUT THE PRIOR WRITTEN CONSENT OF SSFM INTERNATIONAL, INC.

DATE
NOVEMBER 2022

SHEET NUMBER
C-101
8 OF 109 SHEETS

PRINTED: 11/14/22

W:_CIVIL 3D PROJECTS\2018_021.001 DHHL HANAPEPE RESIDENTIAL SUBDIVISION PHASE 2\01 CE DWG\C-100 - C-101 EXISTING CONDITION PLANS.DWG 11/14/2022 11:09 AM
FBORNALES

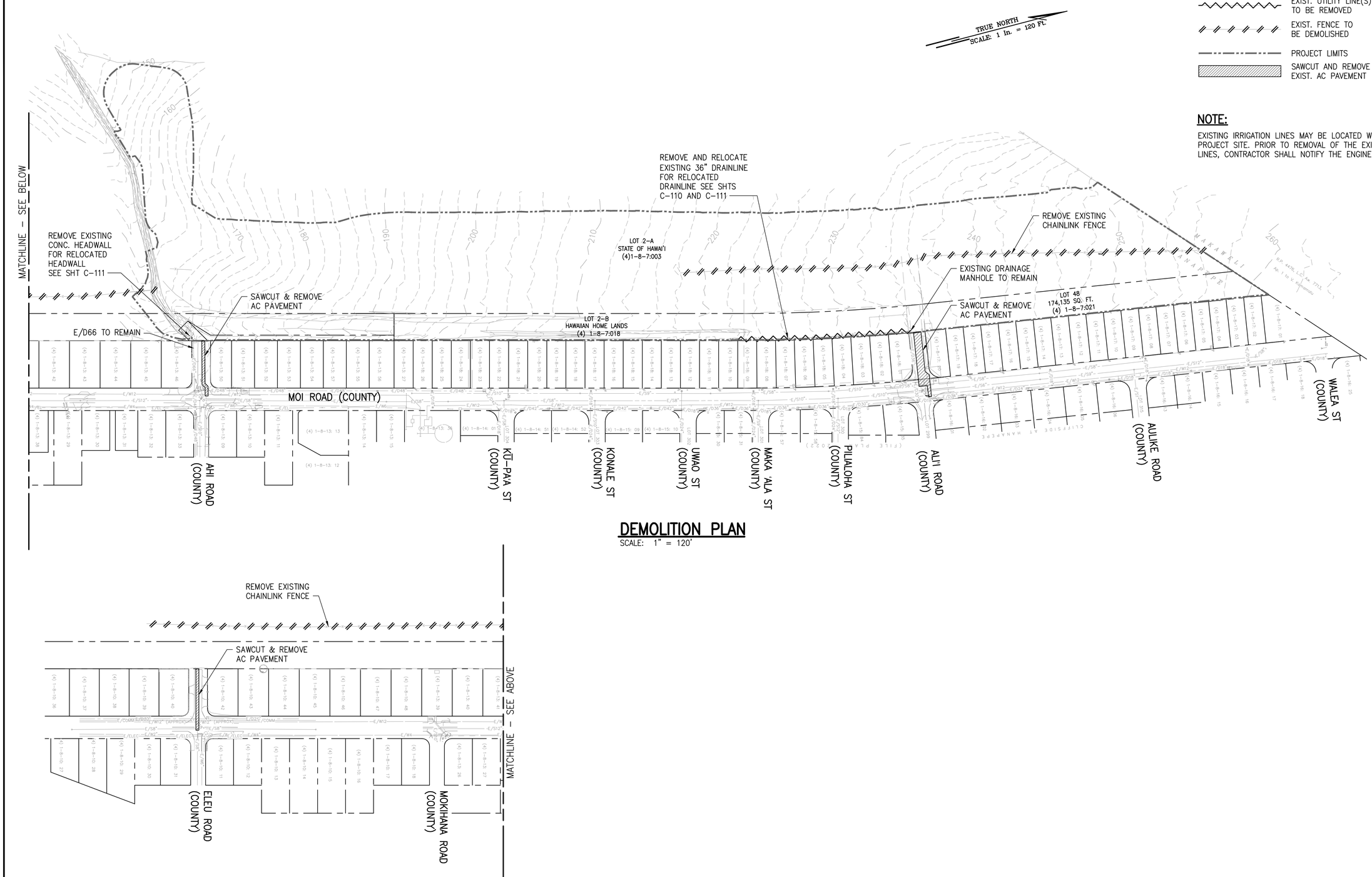

DEMOLITION PLAN
SCALE: 1" = 120'

GRAPHIC SCALE:
100' 50' 0 100' 200'
SCALE: 1" = 120'

RICHARD Y. SANTO
LICENSED PROFESSIONAL ENGINEER
NO. 8955-C
HAWAII USA

This work was prepared by me or under my supervision for the exclusive use of SSFM International, Inc. and its clients. Unauthorized use of this work for any other purpose is prohibited. No warranties (Express, Implied or Statutory) including but not limited to Professional Engineering Judgments, Services, and Instruments of Service (whether written or electronic) are made by SSFM International, Inc. 4/30/24
Signature Date
My license renewal date is April 30, 2024
Pages or sheets covered by this seal: All pages of the Grading, Drainage, and Erosion Control Plans
NOTE: Contractor to check and verify dimensions at job before proceeding with work.

SSFM International
SSFM International, Inc.
501 Sumner Street
Suite 620
Honolulu, Hawaii 96817

REVISION	DATE	DESCRIPTION	MADE BY	APPROVED

PROJECT:
DEPARTMENT OF HAWAIIAN HOME LANDS
SITE AND INFRASTRUCTURE IMPROVEMENTS
FOR HANAPĒPĒ RESIDENTIAL LOTS, PHASE 2
TMK: (4) 1-8-007: 003 (PORTION) & (4) 2-8-007: 001 TO 050 (PORTION)
Hanapēpē, Waimea, Kaua'i, Hawai'i

DEMOLITION PLAN

THIS DOCUMENT CONTAINS INFORMATION PROPRIETARY TO SSFM INTERNATIONAL, INC., AND IS FURNISHED IN CONFIDENCE FOR THE LIMITED PURPOSE OF EVALUATION, BIDDING OR REVIEW. THIS DOCUMENT OR ITS CONTENTS MAY NOT BE USED FOR ANY OTHER PURPOSE AND MAY NOT BE REPRODUCED OR DISCLOSED TO OTHERS WITHOUT THE PRIOR WRITTEN CONSENT OF SSFM INTERNATIONAL, INC.

DATE
NOVEMBER 2022

SHEET NUMBER
C-102
9 OF 109 SHEETS

PRINTED: 11/10/22

W:_CIVIL 3D PROJECTS\2018_021.001 DHHL HANAPEPE RESIDENTIAL SUBDIVISION PHASE 2\01 CE DWG\C-102 DEMOLITION PLAN.DWG 11/8/2022 9:57 AM EBORNALES

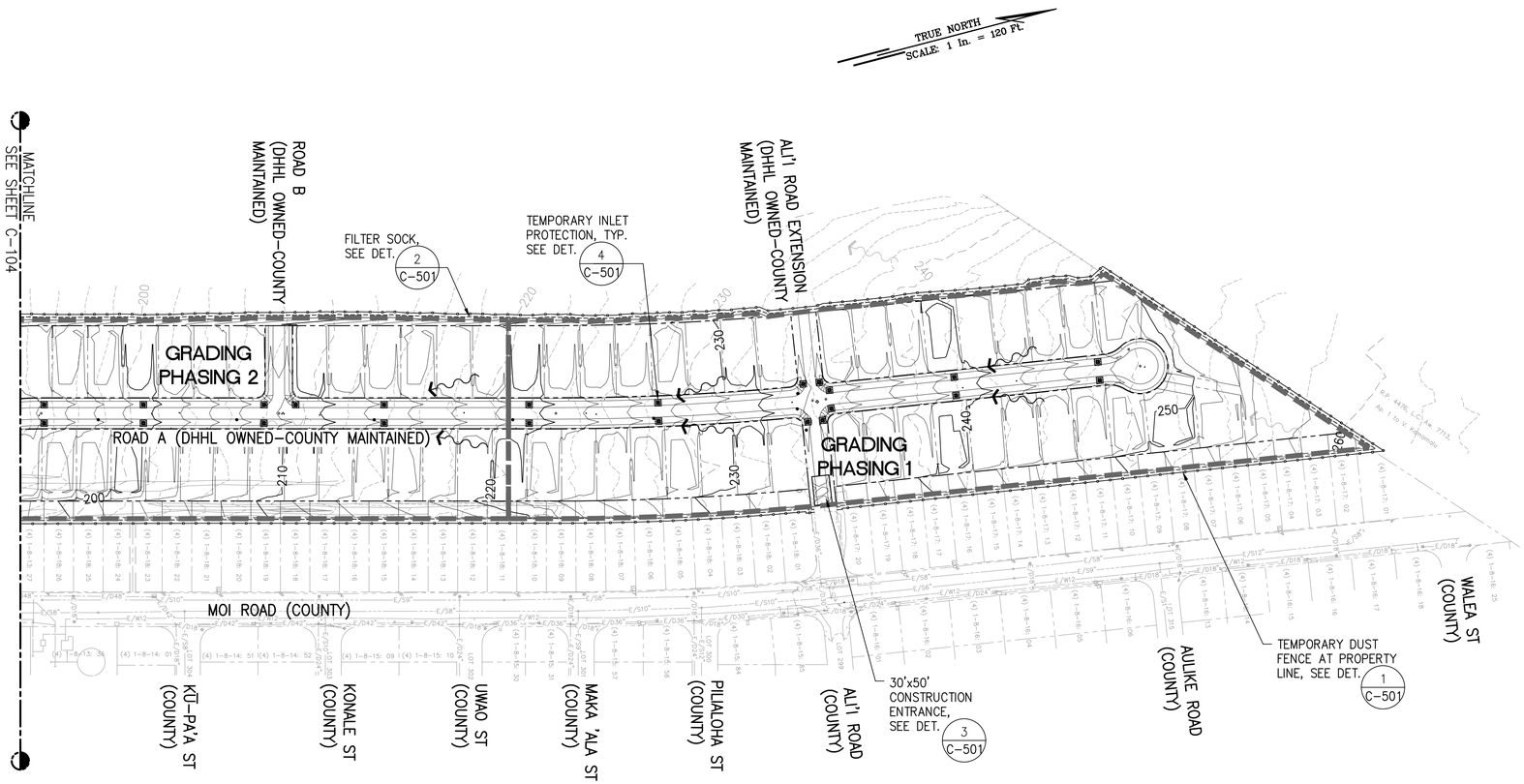

OVERALL EROSION AND SEDIMENT CONTROL PLAN – 1

SCALE: 1" = 120'

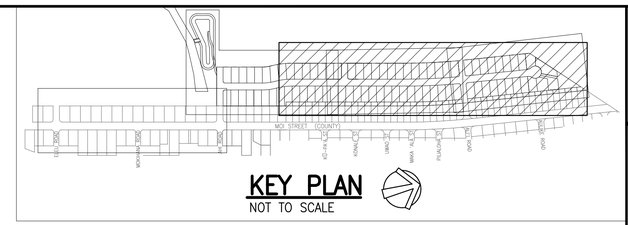

KEY PLAN

NOT TO SCALE

LEGEND:

- CONSTRUCTION INGRESS/EGRESS
- PROPERTY LINE
- 705 EXISTING CONTOURS
- 705 PROPOSED CONTOURS
- LIMITS OF GRADING AND DISTURBANCE
- FILTER SOCK PERIMETER CONTROL
- TEMPORARY CONSTRUCTION FENCE
- GRADING PHASING LIMITS
- TEMPORARY INLET PROTECTION
- EXISTING RUNOFF DIRECTION
- PROPOSED RUNOFF DIRECTION

NOTES:

1. FOR DETAILED EROSION AND SEDIMENT CONTROL PLAN, SEE SHEETS C–115 AND C–116.
2. BMP PLAN IS CONCEPTUAL IN NATURE. CONTRACTOR TO ADJUST PLAN AS REQUIRED FOR PHASING OF PROJECT.
3. FOR GRADING PHASING PLAN, SEE SHEET C–109.

GRAPHIC SCALE:

100' 50' 0 100' 200'

SCALE: 1" = 120'

RICHARD Y. SANTO
LICENSED PROFESSIONAL ENGINEER
NO. 8955-C
HAWAII USA

This work was prepared by me or under my supervision and is protected by the laws of the United States copyright (Title 17, United States Code Sections 101 et seq.). Unauthorized use of this work may violate copyright laws, and subject the violator to liability. 4/30/24
Registered Professional Engineer
State of Hawaii
Signature

NOTE: Contractor to check and verify dimensions at job before proceeding with work.

SSFM International
SSFM International, Inc.
501 Sumner Street
Suite 620
Honolulu, Hawaii 96817

REVISION	DATE	DESCRIPTION	MADE BY	APPROVED

PROJECT:
DEPARTMENT OF HAWAIIAN HOME LANDS
SITE AND INFRASTRUCTURE IMPROVEMENTS
FOR HANAPĒPĒ RESIDENTIAL LOTS, PHASE 2
TMK: (4) 1-8-007: 003 (PORTION) & (4) 2-8-007: 001 TO 050 (PORTION)
Hanapēpē, Waimea, Kaua'i, Hawai'i

OVERALL EROSION AND SEDIMENT CONTROL PLAN - 1

THIS DOCUMENT CONTAINS INFORMATION PROPRIETARY TO SSFM INTERNATIONAL, INC., AND IS FURNISHED IN CONFIDENCE FOR THE LIMITED PURPOSE OF EVALUATION, BIDDING OR REVIEW. THIS DOCUMENT OR ITS CONTENTS MAY NOT BE USED FOR ANY OTHER PURPOSE AND MAY NOT BE DISCLOSED OR APPEAR TO BE DISCLOSED TO OTHERS WITHOUT THE PRIOR WRITTEN CONSENT OF SSFM INTERNATIONAL, INC.

DATE
NOVEMBER 2022

SHEET NUMBER
C-103
10 OF 109 SHEETS

W:_CIVIL 3D PROJECTS\2018_021.001 DHHL HANAPEPE RESIDENTIAL SUBDIVISION PHASE 2\01 CE DWG\C-103 - C-104 OVERALL EROSION AND SEDIMENT CONTROL PLANS.DWG 11/10/2022 11:41 AM EBORNALES

PRINTED: 11/14/22

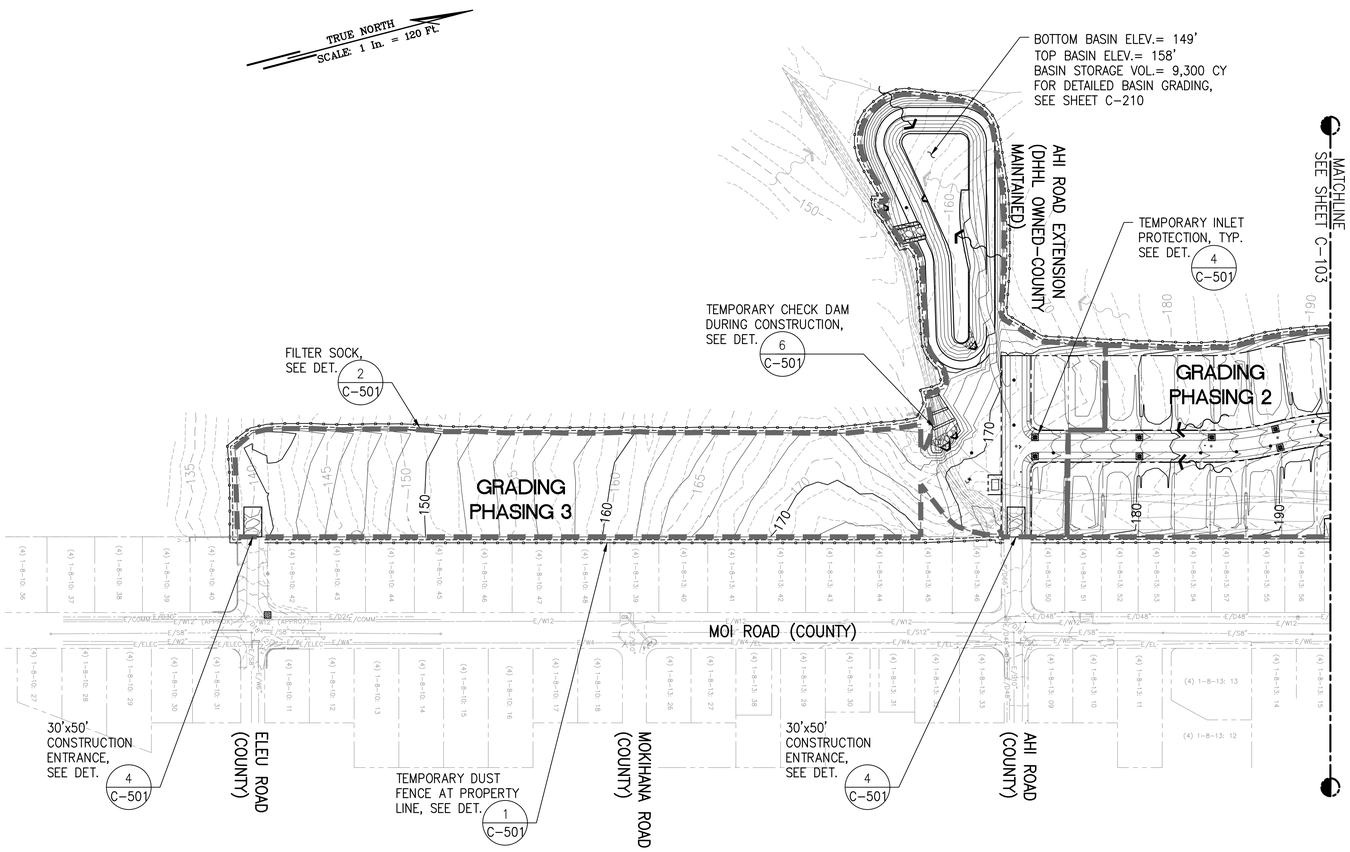

OVERALL EROSION AND SEDIMENT CONTROL PLAN – 2

SCALE: 1" = 120'

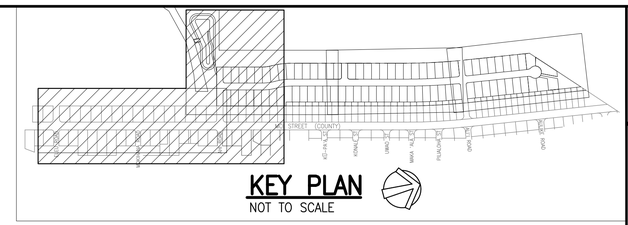

LEGEND:

- CONSTRUCTION INGRESS/EGRESS
- PROPERTY LINE
- 705 EXISTING CONTOURS
- 705 PROPOSED CONTOURS
- LIMITS OF GRADING AND DISTURBANCE
- FILTER SOCK PERIMETER CONTROL
- TEMPORARY CONSTRUCTION FENCE
- GRADING PHASING LIMITS
- TEMPORARY INLET PROTECTION
- TEMPORARY CHECK DAM
- EXISTING RUNOFF DIRECTION
- PROPOSED RUNOFF DIRECTION

NOTES:

1. FOR DETAILED EROSION AND SEDIMENT CONTROL PLAN, SEE SHEETS C-115 AND C-116.
2. BMP PLAN IS CONCEPTUAL IN NATURE. CONTRACTOR TO ADJUST PLAN AS REQUIRED FOR PHASING OF PROJECT.
3. FOR GRADING PHASING PLAN, SEE SHEET C-109.

GRAPHIC SCALE:

100' 50' 0 100' 200'

SCALE: 1" = 120'

RICHARD Y. SANTO
LICENSED PROFESSIONAL ENGINEER
NO. 8955-C
HAWAII USA

This work was prepared by me or under my supervision and I certify that to the best of my knowledge, the design is in accordance with the Professional Engineers, Architects, Surveyors, and Landscape Architects Laws. 4/30/24 My registration expires at the end of the license period.

NOTE: Contractor to check and verify dimensions at job before proceeding with work.

SSFM International
SSFM International, Inc.
501 Sumner Street
Suite 620
Honolulu, Hawaii 96817

REVISION	DATE	DESCRIPTION	MADE BY	APPROVED

PROJECT:
DEPARTMENT OF HAWAIIAN HOME LANDS
SITE AND INFRASTRUCTURE IMPROVEMENTS
FOR HANAPĒPĒ RESIDENTIAL LOTS, PHASE 2
TMK: (4) 1-8-007: 003 (PORTION) & (4) 2-8-007: 001 TO 050 (PORTION)
Hanapēpē, Waimea, Kaua'i, Hawai'i

OVERALL EROSION AND SEDIMENT CONTROL PLAN - 2

THIS DOCUMENT CONTAINS INFORMATION PROPRIETARY TO SSFM INTERNATIONAL, INC., AND IS FURNISHED IN CONFIDENCE FOR THE LIMITED PURPOSE OF EVALUATION, BIDDING OR REVIEW. THIS DOCUMENT OR ITS CONTENTS MAY NOT BE USED FOR ANY OTHER PURPOSE AND MAY NOT BE DISCLOSED OR LOANED TO OTHERS WITHOUT THE PRIOR WRITTEN CONSENT OF SSFM INTERNATIONAL, INC.

DATE
NOVEMBER 2022

SHEET NUMBER
C-104
11 OF 109 SHEETS

W:_CIVIL 30 PROJECTS\2018_021.001 DHHL HANAPEPE RESIDENTIAL SUBDIVISION PHASE 2\01 CE DWG\C-103 - C-104 OVERALL EROSION AND SEDIMENT CONTROL PLANS.DWG 11/10/2022 11:41 AM EBORNALES

PRINTED: 11/14/22

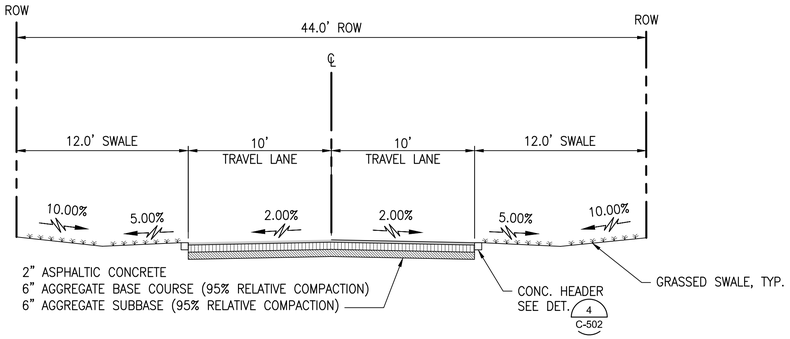

4 C-105 TYPICAL SECTION – ALI'I ROAD EXTENSION

NOT TO SCALE

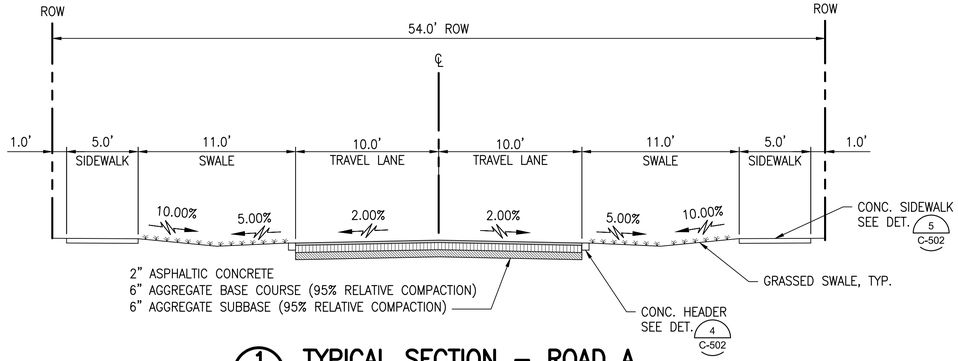

1 C-105 TYPICAL SECTION – ROAD A

NOT TO SCALE

NOTE:

FINAL PAVEMENT SECTION TO BE PROVIDED BY GEOTECHNICAL REPORT.

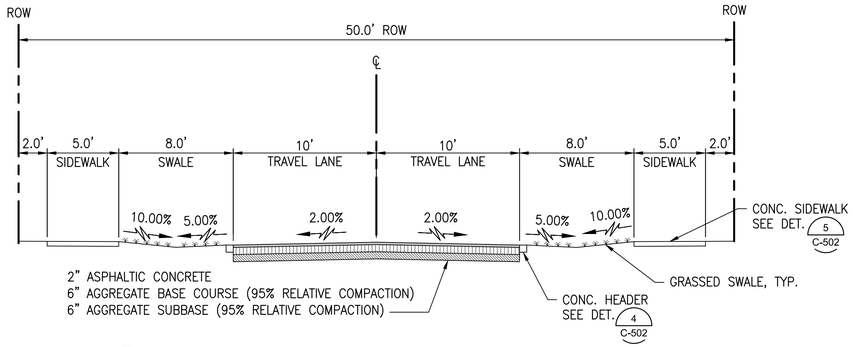

5 C-105 TYPICAL SECTION – AHI ROAD EXTENSION

NOT TO SCALE

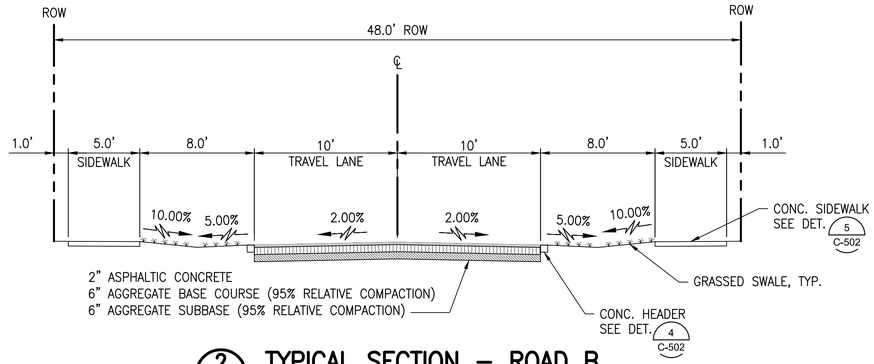

2 C-105 TYPICAL SECTION – ROAD B

NOT TO SCALE

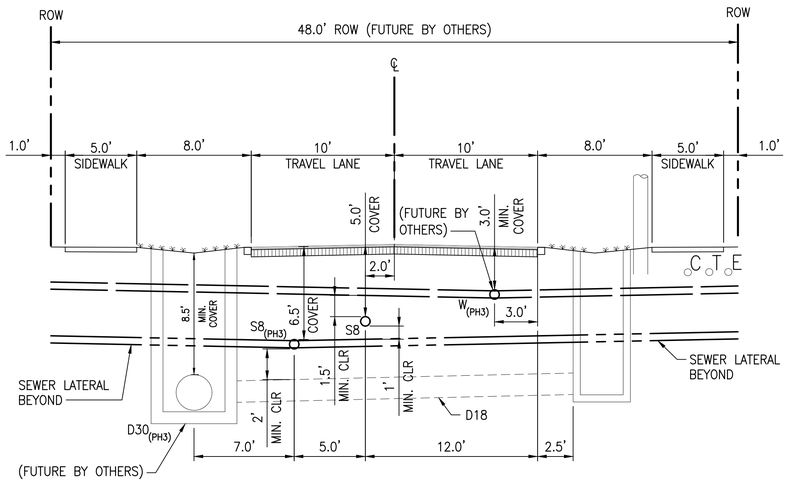

6 C-105 TYPICAL UTILITY SECTION FUTURE ROAD

NOT TO SCALE

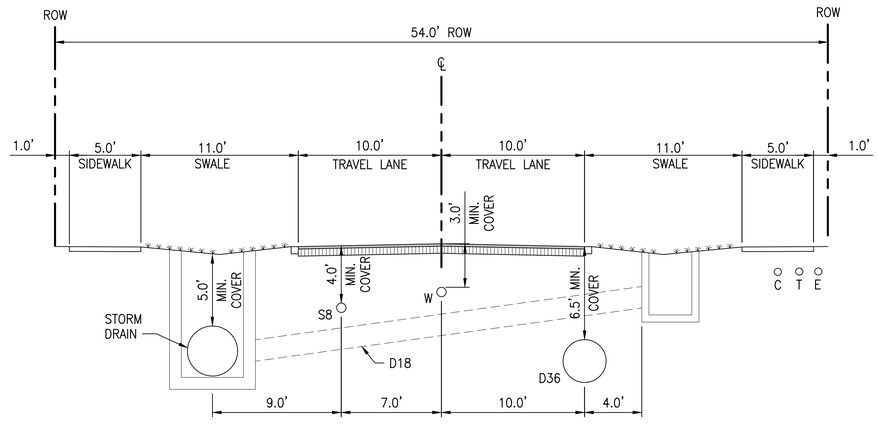

3 C-105 TYPICAL UTILITY LOCATION WITHIN ROW

NOT TO SCALE

RICHARD Y. SANTO
LICENSED PROFESSIONAL ENGINEER
NO. 8955-C
HAWAII USA

This work was prepared by me or under my supervision and I am a duly licensed professional engineer under the laws of the State of Hawaii. (Errors, Omissions, and Limitations Attached)

4/30/24
Expiration date of the license

NOTE: Contractor to check and verify dimensions at job before proceeding with work.

SSFM International, Inc.
501 Sumner Street
Suite 620
Honolulu, Hawaii 96817

REVISION	DATE	DESCRIPTION	MADE BY	APPROVED

PROJECT:
DEPARTMENT OF HAWAIIAN HOME LANDS
SITE AND INFRASTRUCTURE IMPROVEMENTS
FOR HANAPĒPĒ RESIDENTIAL LOTS, PHASE 2
TMK: (4) 1-8-007: 003 (PORTION) & (4) 2-8-007: 001 TO 050 (PORTION)
Hanapēpē, Waimea, Kaua'i, Hawai'i

TYPICAL SECTIONS

THIS DOCUMENT CONTAINS INFORMATION PROPRIETARY TO SSFM INTERNATIONAL, INC., AND IS FURNISHED IN CONFIDENCE FOR THE LIMITED PURPOSE OF EVALUATION, BIDDING OR REVIEW. THIS DOCUMENT OR ITS CONTENTS MAY NOT BE USED FOR ANY OTHER PURPOSE AND MAY NOT BE DISCLOSED OR LOANED TO OTHERS WITHOUT THE PRIOR WRITTEN CONSENT OF SSFM INTERNATIONAL, INC.

DATE
NOVEMBER 2022

SHEET NUMBER
C-105

12 OF 109 SHEETS

W:_CIVIL 3D PROJECTS\2018_021.001 DHHL HANAPEPE RESIDENTIAL SUBDIVISION PHASE 2\01 CE DWG\C-105 TYPICAL SECTIONS.DWG 11/10/2022 11:01 AM EBORNALES

LEGEND:

- PROPERTY LINE
- ASPHALTIC CONCRETE PAVEMENT
- CONCRETE SIDEWALK/DRIVEWAY
- GRASSED SWALE

NOTE:

FOR TIES FROM CONTROL BENCHMARKS ALONG MOI ROAD TO ROAD BASELINE STATIONS, SEE SHEETS C-117 AND C-118.

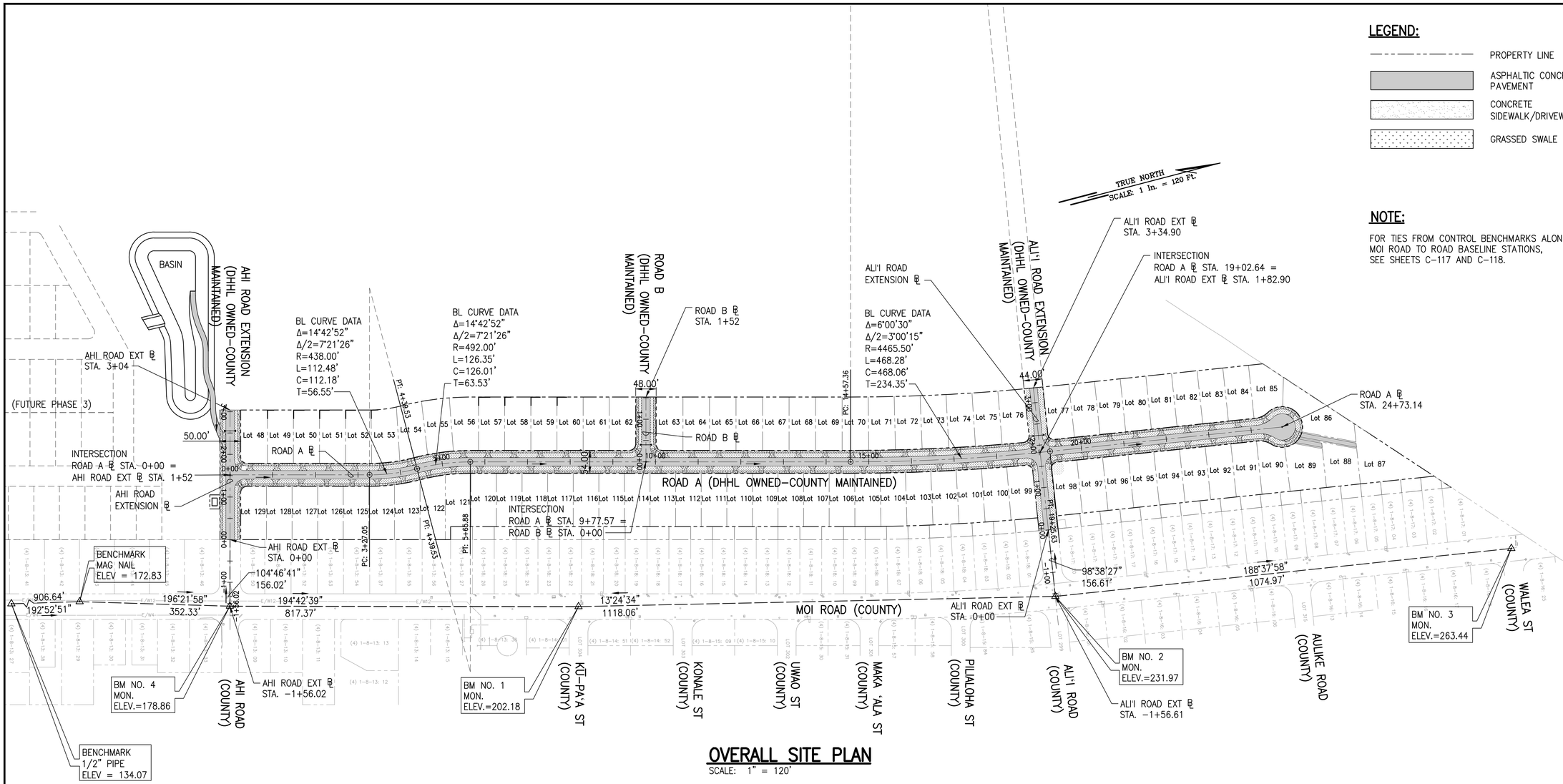

OVERALL SITE PLAN

SCALE: 1" = 120'

GRAPHIC SCALE:

100' 50' 0 100' 200'

SCALE: 1" = 120'

RICHARD Y. SANTO LICENSED PROFESSIONAL ENGINEER NO. 8955-C HAWAII USA

This work was prepared by me or under my supervision and construction of this project will be under my direction. Dissemination of construction as defined in Chapter 16-115, Subsidiary Definitions of the Hawaii Administrative Rules, Professional Engineers, Architects, Surveyors, and Landscape Architects.

Signature 4/30/24 expiration date of the license

NOTE: Contractor to check and verify dimensions at job before proceeding with work.

SSFM International
SSFM International, Inc.
501 Sumner Street
Suite 620
Honolulu, Hawaii 96817

REVISION	DATE	DESCRIPTION	MADE BY	APPROVED

PROJECT:
DEPARTMENT OF HAWAIIAN HOME LANDS
SITE AND INFRASTRUCTURE IMPROVEMENTS
FOR HANAPĒPĒ RESIDENTIAL LOTS, PHASE 2
TMK: (4) 1-8-007: 003 (PORTION) & (4) 2-8-007: 001 TO 050 (PORTION)
Hanapēpē, Waimea, Kaua'i, Hawai'i

OVERALL SITE PLAN

THIS DOCUMENT CONTAINS INFORMATION PROPRIETARY TO SSFM INTERNATIONAL, INC., AND IS FURNISHED IN CONFIDENCE FOR THE LIMITED PURPOSE OF EVALUATION, BIDDING OR REVIEW. THIS DOCUMENT OR ITS CONTENTS MAY NOT BE USED FOR ANY OTHER PURPOSE AND MAY NOT BE REPRODUCED OR DISCLOSED TO OTHERS WITHOUT THE PRIOR WRITTEN CONSENT OF SSFM INTERNATIONAL, INC.

DATE
NOVEMBER 2022

SHEET NUMBER
C-106

W:_CIVIL 3D PROJECTS\2018_021.001 DHHL HANAPEPE RESIDENTIAL SUBDIVISION PHASE 2\01 CE DWG\C-106 OVERALL SITE PLAN.DWG 11/10/2022 8:15 AM EBORNALES

PRINTED: 11/10/22

OVERALL GRADING PLAN – 1

SCALE: 1" = 120'

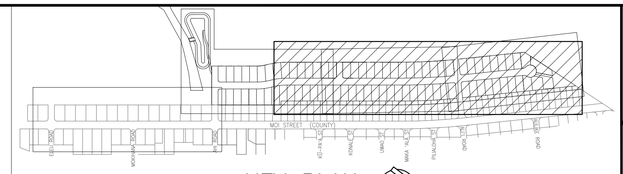

KEY PLAN

NOT TO SCALE

LEGEND:

- PROPERTY LINE
- EXISTING CONTOURS
- PROPOSED CONTOURS
- EXIST. DRAINLINE
- DRAINLINE
- LIMITS OF GRADING AND DISTURBANCE
- GRATED DRAIN INLET (GDI)
- STORM DRAIN MANHOLE (SDMH)
- SEWER MANHOLE (SMH)
- FIRE HYDRANT

EARTHWORK SUMMARY:

AREA TO BE GRADED	1,209,700 SF (27.77 AC)
AREA TO BE DISTURBED	1,209,700 SF (27.77 AC)
EXCAVATION	33,700 CY (CUT)
EMBANKMENT	41,750 CY (FILL)
NET	8,050 CY (FILL)

QUANTITIES SHOWN ARE FOR THE COUNTY GRADING PERMIT PURPOSE ONLY AND DO NOT INCLUDE TRENCH OR STRUCTURAL EXCAVATION AND BACKFILL. THE CONTRACTOR SHALL VERIFY ALL EARTHWORKS QUANTITIES FOR THEIR BIDDING PURPOSES.

NOTES:

1. FOR DETAILED GRADING AND DRAINAGE PLANS, SEE SHEETS C-121 AND C-126
2. FOR GRADING SECTIONS, SEE SHEETS C-301 AND C-302

GRAPHIC SCALE:

100' 50' 0 100' 200'

SCALE: 1" = 120'

RICHARD Y. SANTO
LICENSED PROFESSIONAL ENGINEER
NO. 8955-C
HAWAII USA

This work was prepared by me or under my supervision and contribution of this project to be under my observation. (Discretion of construction as defined in Chapter 16-115, Subsidiary Rules, Definitions of the Hawaii Administrative Rules, Professional Engineers, Architects, Surveyors, and Landscape Architects)

4/30/24
signature
expiration date of the license

NOTE: Contractor to check and verify dimensions at job before proceeding with work.

SSFM International
SSFM International, Inc.
501 Sumner Street
Suite 620
Honolulu, Hawaii 96817

REVISION	DATE	DESCRIPTION	MADE BY	APPROVED

PROJECT:
DEPARTMENT OF HAWAIIAN HOME LANDS
SITE AND INFRASTRUCTURE IMPROVEMENTS
FOR HANAPĒPĒ RESIDENTIAL LOTS, PHASE 2
TMK: (4) 1-8-007: 003 (PORTION) & (4) 2-8-007: 001 TO 050 (PORTION)
Hanapēpē, Waimea, Kaua'i, Hawai'i

OVERALL GRADING PLAN - 1

THIS DOCUMENT CONTAINS INFORMATION PROPRIETARY TO SSFM INTERNATIONAL, INC., AND IS FURNISHED IN CONFIDENCE FOR THE LIMITED PURPOSE OF EVALUATION, BIDDING OR REVIEW. THIS DOCUMENT OR ITS CONTENTS MAY NOT BE USED FOR ANY OTHER PURPOSE AND MAY NOT BE REPRODUCED OR DISCLOSED TO OTHERS WITHOUT THE PRIOR WRITTEN CONSENT OF SSFM INTERNATIONAL, INC.

DATE
NOVEMBER 2022

SHEET NUMBER
C-107

W:_CIVIL 3D PROJECTS\2018_021.001 DHHL HANAPEPE RESIDENTIAL SUBDIVISION PHASE 2\01 CE DWG\C-107 - C-108 OVERALL GRADING PLANS.DWG 11/10/2022 11:43 AM EBORNALES

PRINTED: 11/10/22

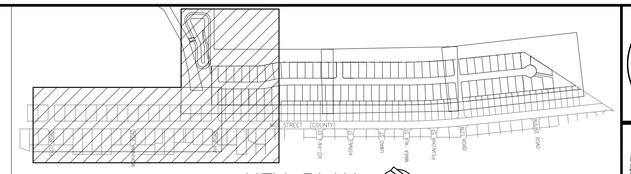

KEY PLAN
NOT TO SCALE

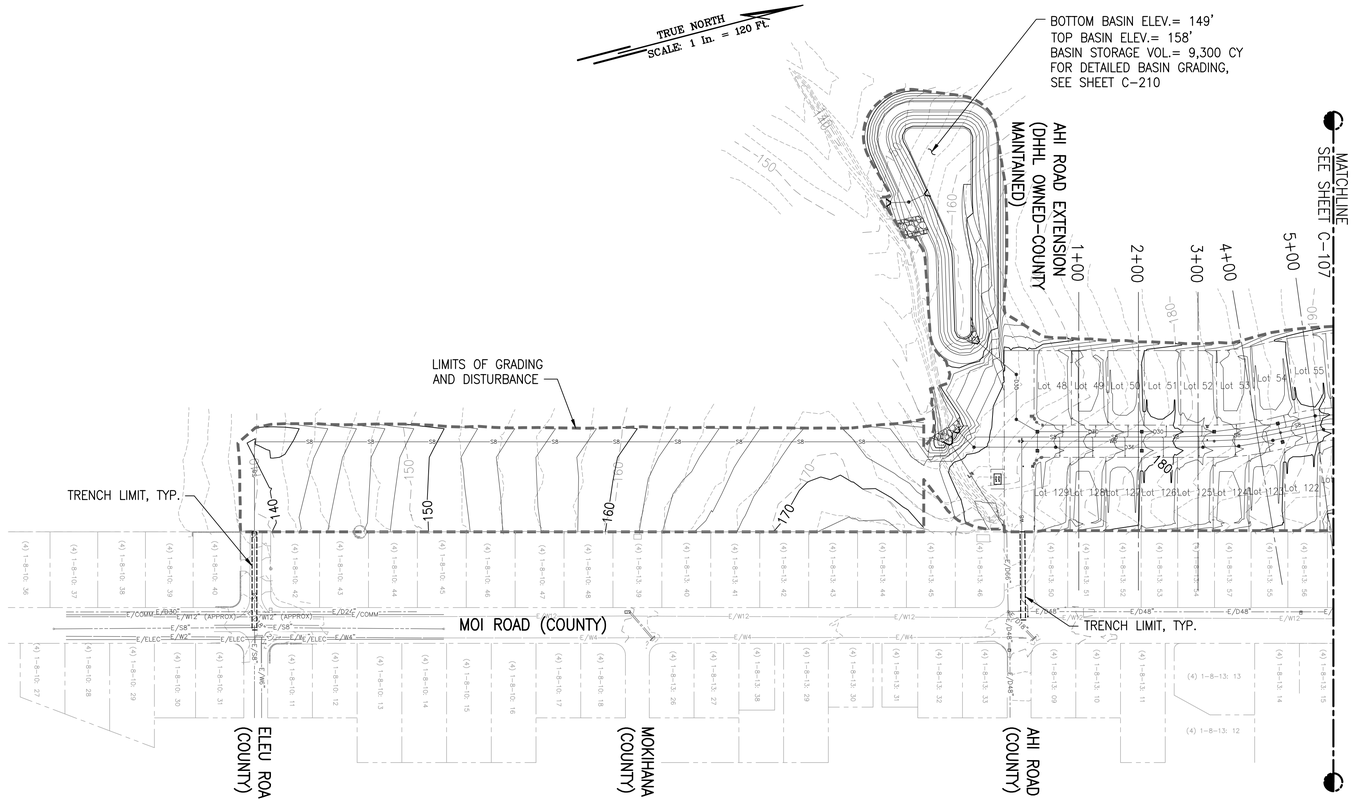

OVERALL GRADING PLAN – 2

SCALE: 1" = 120'

LEGEND:

- PROPERTY LINE
- EXISTING CONTOURS
- PROPOSED CONTOURS
- EXIST. DRAINLINE
- DRAINLINE
- LIMITS OF GRADING AND DISTURBANCE
- GRATED DRAIN INLET (GDI)
- STORM DRAIN MANHOLE (SDMH)
- SEWER MANHOLE (SMH)
- FIRE HYDRANT

NOTES:

1. FOR DETAILED GRADING AND DRAINAGE PLANS, SEE SHEETS C-121 AND C-126
2. FOR GRADING SECTIONS, SEE SHEETS C-301 AND C-302

GRAPHIC SCALE:

100' 50' 0 100' 200'

SCALE: 1" = 120'

RICHARD Y. SANTO
LICENSED PROFESSIONAL ENGINEER
NO. 8955-C
HAWAII USA

This work was prepared by me or under my supervision and construction of this project will be under my observation. (Discretion of construction as defined in Chapter 14-115, Subsection 2, Definitions of the Hawaii Administrative Rules, Professional Engineers, Architects, Surveyors, and Landscape Architects)

Signature 4/30/24 expiration date of the license

NOTE: Contractor to check and verify dimensions at job before proceeding with work.

SSFM International
SSFM International, Inc.
501 Sumner Street
Suite 620
Honolulu, Hawaii 96817

REVISION	DATE	DESCRIPTION	MADE BY	APPROVED

PROJECT:
DEPARTMENT OF HAWAIIAN HOME LANDS
SITE AND INFRASTRUCTURE IMPROVEMENTS
FOR HANAPĒPĒ RESIDENTIAL LOTS, PHASE 2
TMK: (4) 1-8-007: 003 (PORTION) & (4) 2-8-007: 001 TO 050 (PORTION)
Hanapēpē, Waimea, Kaua'i, Hawai'i

OVERALL GRADING PLAN - 2

THIS DOCUMENT CONTAINS INFORMATION PROPRIETARY TO SSFM INTERNATIONAL, INC., AND IS FURNISHED IN CONFIDENCE FOR THE LIMITED PURPOSE OF EVALUATION, BIDDING OR REVIEW. THIS DOCUMENT OR ITS CONTENTS MAY NOT BE USED FOR ANY OTHER PURPOSE AND MAY NOT BE REPRODUCED OR DISCLOSED TO OTHERS WITHOUT THE PRIOR WRITTEN CONSENT OF SSFM INTERNATIONAL, INC.

DATE
NOVEMBER 2022

SHEET NUMBER
C-108

W:_CIVIL 3D PROJECTS\2018_021.001 DHHL HANAPEPE RESIDENTIAL SUBDIVISION PHASE 2\01 CE DWG\C-107 - C-108 OVERALL GRADING PLANS.DWG 11/10/2022 11:48 AM EBORNALES

PRINTED: 11/10/22

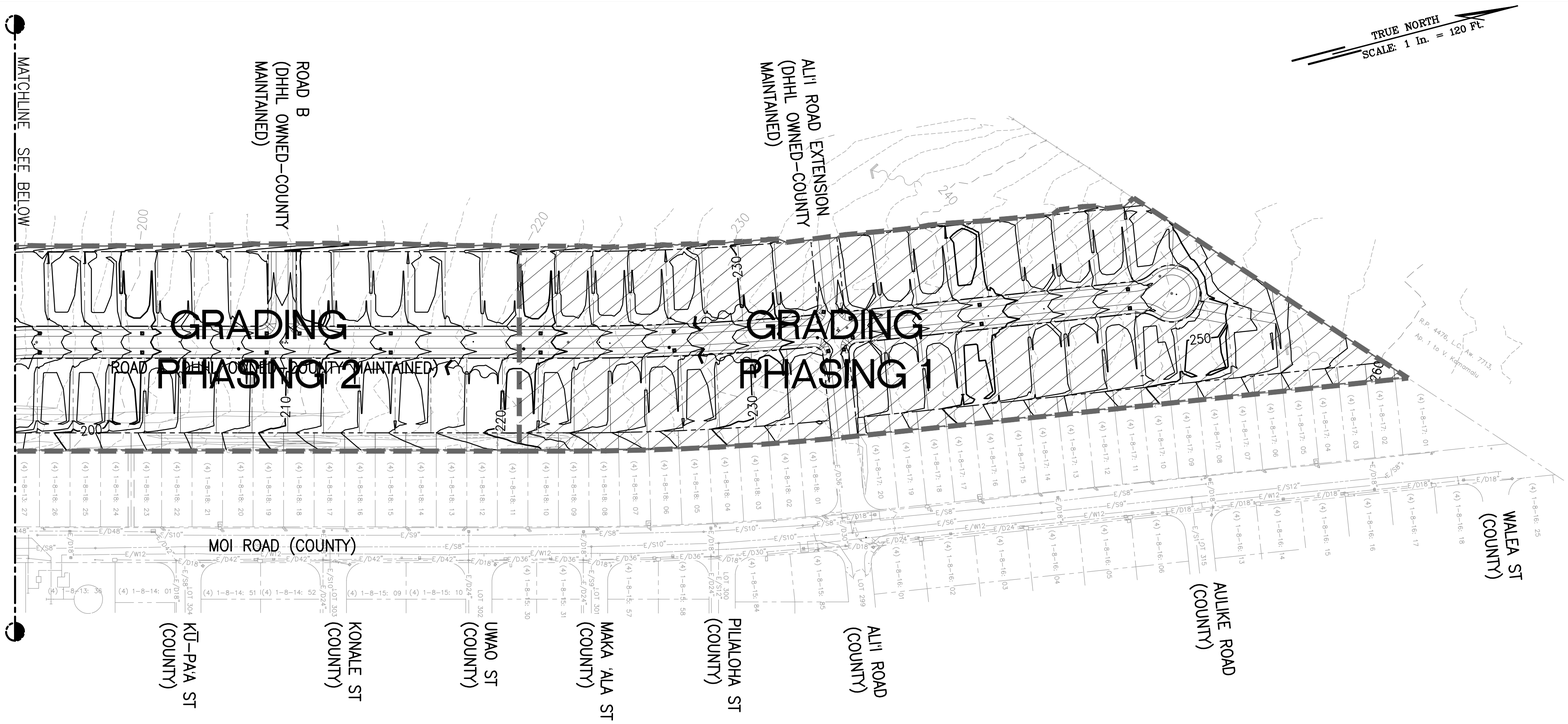

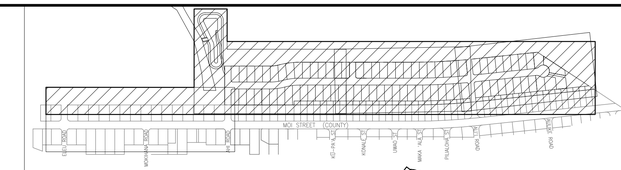

KEY PLAN
NOT TO SCALE

LEGEND:

- PROPERTY LINE
- RIGHT-OF-WAY
- EXISTING MAJOR CONTOUR
- EXISTING MINOR CONTOUR
- PROPOSED MAJOR CONTOUR
- PROPOSED MINOR CONTOUR
- LIMITS OF GRADING
- GRADING PHASING LIMITS
- GRADING PHASE 1 (9.85 ACRES)
- GRADING PHASE 2 (9.74 ACRES)
- GRADING PHASE 3 (8.18 ACRES)

NOTE:

GRADING AND GRUBBING SHALL BE DONE IN PHASES AND LIMITED TO 10 ACRES MAXIMUM PER PHASE. CONTRACTOR TO ADJUST BMP PLAN AS REQUIRED FOR PHASING PROJECT.

APPROXIMATE EARTHWORK			
GRADING PHASE	AREA (ACRES)	CUT (CY)	FILL (CY)
1	9.85	13,920±	4,950±
2	9.74	3,340±	20,020±
3	8.18	16,440±	16,780±

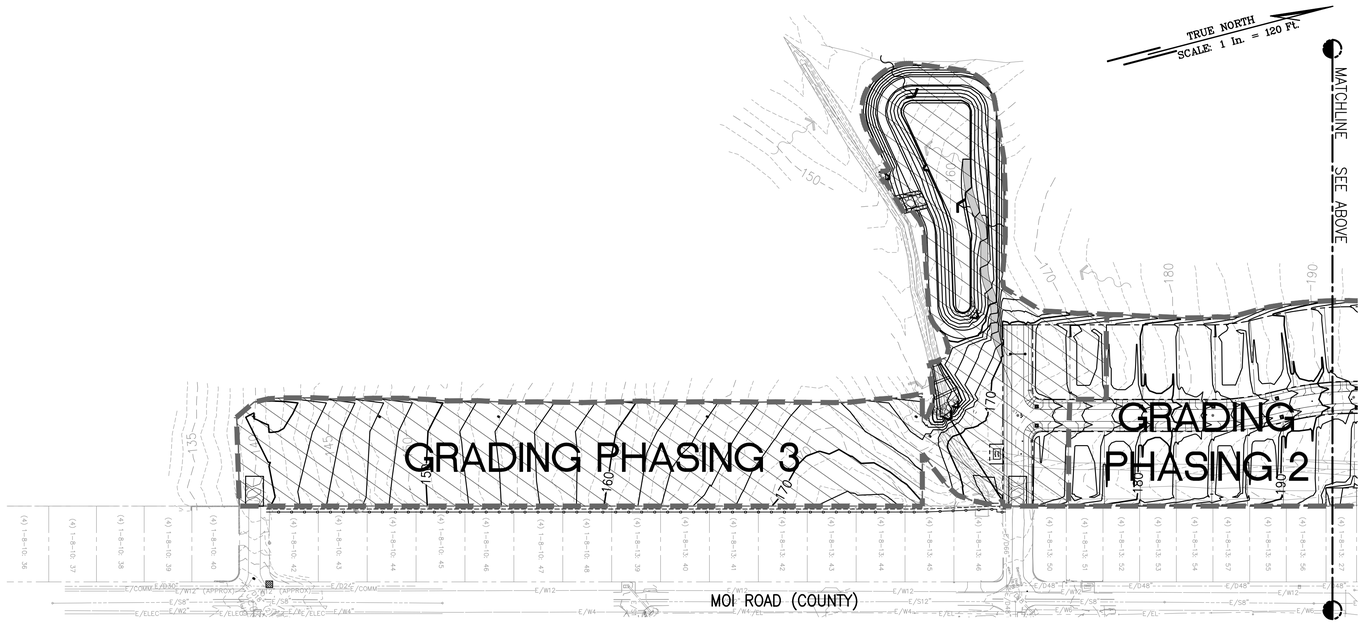

GRADING PHASING PLAN
SCALE: 1" = 120'

GRAPHIC SCALE:
100' 50' 0 100' 200'
SCALE: 1" = 120'

RICHARD Y. SANTO
LICENSED PROFESSIONAL ENGINEER
NO. 8955-C
HAWAII USA

This work was prepared by me or under my supervision and contribution of this project will be under my observation. (Dissemination of construction as defined in Chapter 14-115, Submission Definitions of the Hawaii Administrative Rules, Professional Engineers, Architects, Surveyors, and Landscape Architects)
Signature 4/30/24 expiration date of the license
NOTE: Contractor to check and verify dimensions at job before proceeding with work.

SSFM International
SSFM International, Inc.
501 Sumner Street
Suite 620
Honolulu, Hawaii 96817

REVISION	DATE	DESCRIPTION	MADE BY	APPROVED

PROJECT:
DEPARTMENT OF HAWAIIAN HOME LANDS
SITE AND INFRASTRUCTURE IMPROVEMENTS
FOR HANAPĒPĒ RESIDENTIAL LOTS, PHASE 2
TMK: (4) 1-8-007: 003 (PORTION) & (4) 2-8-007: 001 TO 050 (PORTION)
Hanapēpē, Waimea, Kaua'i, Hawai'i

GRADING PHASING PLAN

THIS DOCUMENT CONTAINS INFORMATION PROPRIETARY TO SSFM INTERNATIONAL, INC., AND IS FURNISHED IN CONFIDENCE FOR THE LIMITED PURPOSE OF EVALUATION, BIDDING OR REVIEW. THIS DOCUMENT OR ITS CONTENTS MAY NOT BE USED FOR ANY OTHER PURPOSE AND MAY NOT BE REPRODUCED OR DISCLOSED TO OTHERS WITHOUT THE PRIOR WRITTEN CONSENT OF SSFM INTERNATIONAL, INC.

DATE
NOVEMBER 2022

SHEET NUMBER
C-109
16 OF 109 SHEETS

W:_CIVIL 3D PROJECTS\2018_021.001 DHHL HANAPEPE RESIDENTIAL SUBDIVISION PHASE 2\01 CE DWG\C-109 GRADING PHASES PLAN.DWG 11/14/2022 1:27 PM BBROWN

PRINTED: 11/14/22

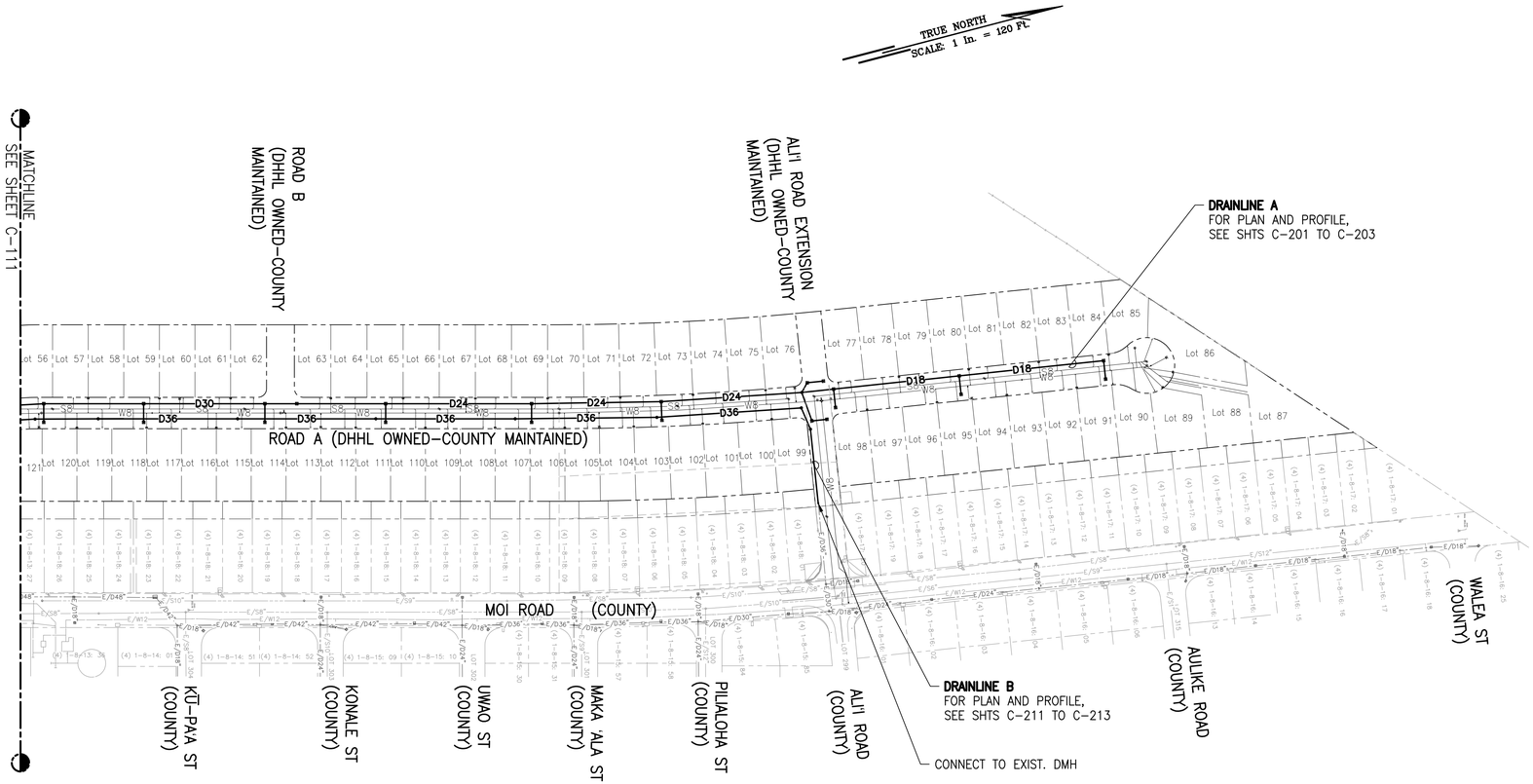

OVERALL DRAINAGE PLAN – 1

SCALE: 1" = 120'

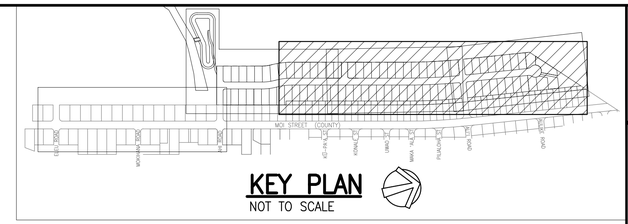

LEGEND:

- PROPERTY LINE
- LOT LINE
- EXIST. DRAINLINE
- EXIST. SEWERLINE
- EXIST. WATERLINE
- DRAINLINE
- SEWERLINE
- WATERLINE
- GRATED DRAIN INLET (GDI)
- STORM DRAIN MANHOLE (SDMH)
- SEWER MANHOLE (SMH)
- FIRE HYDRANT

GRAPHIC SCALE:

100' 50' 0 100' 200'

SCALE: 1" = 120'

RICHARD Y. SANTO
LICENSED PROFESSIONAL ENGINEER
NO. 8955-C
HAWAII USA

This work was prepared by me or under my supervision and is not to be used in whole or in part for any construction. Drawings, Specifications, Plans, Reports, and Other Documents Prepared by Professional Engineers, Architects, Surveyors, and Landscape Architects)

4/30/24
Date of Signature
Expiration Date of the License

NOTE: Contractor to check and verify dimensions at job before proceeding with work.

SSFM International
SSFM International, Inc.
501 Sumner Street
Suite 620
Honolulu, Hawaii 96817

REVISION	DATE	DESCRIPTION	MADE BY	APPROVED

PROJECT:
DEPARTMENT OF HAWAIIAN HOME LANDS
SITE AND INFRASTRUCTURE IMPROVEMENTS
FOR HANAPĒPĒ RESIDENTIAL LOTS, PHASE 2
TMK: (4) 1-8-007: 003 (PORTION) & (4) 2-8-007: 001 TO 050 (PORTION)
Hanapēpē, Waimea, Kaua'i, Hawai'i

OVERALL DRAINAGE PLAN - 1

THIS DOCUMENT CONTAINS INFORMATION PROPRIETARY TO SSFM INTERNATIONAL, INC., AND IS FURNISHED IN CONFIDENCE FOR THE LIMITED PURPOSE OF EVALUATION, BIDDING OR REVIEW. THIS DOCUMENT OR ITS CONTENTS MAY NOT BE USED FOR ANY OTHER PURPOSE AND MAY NOT BE REPRODUCED OR DISCLOSED TO OTHERS WITHOUT THE PRIOR WRITTEN CONSENT OF SSFM INTERNATIONAL, INC.

DATE
NOVEMBER 2022

SHEET NUMBER
C-110
17 OF 109 SHEETS

PRINTED: 11/10/22

W:_CIVIL 3D PROJECTS\2018_021.001 DHHL HANAPEPE RESIDENTIAL SUBDIVISION PHASE 2\01 CE DWG\C-110 - C-111 OVERALL DRAINAGE PLANS.DWG 11/10/2022 1:06 PM EBORNALES

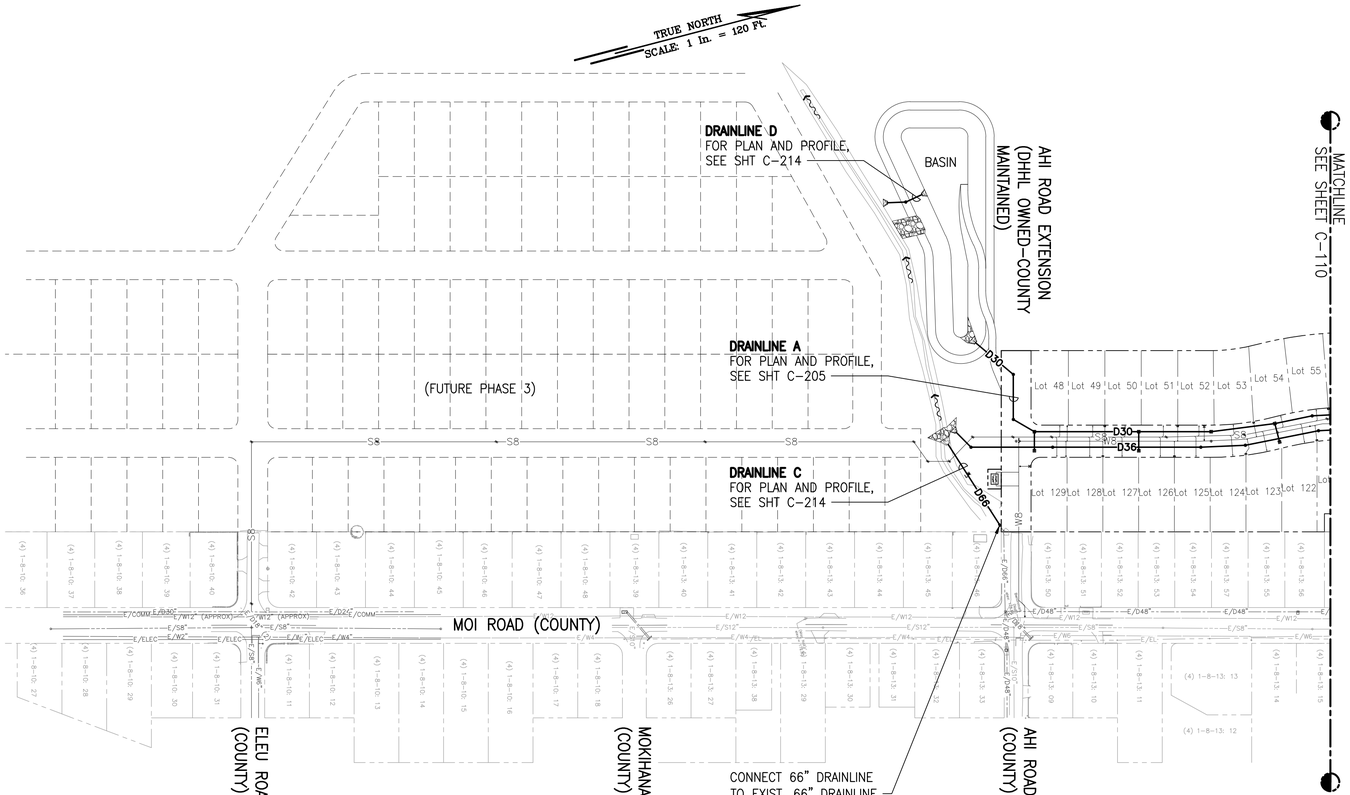

OVERALL DRAINAGE PLAN – 2

SCALE: 1" = 120'

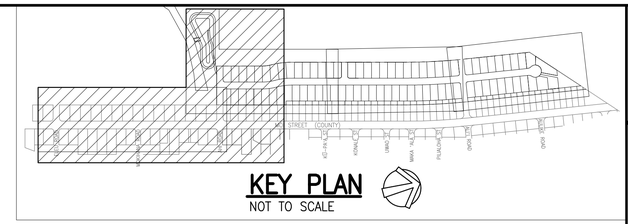

LEGEND:

- PROPERTY LINE
- LOT LINE
- EXIST. DRAINLINE
- EXIST. SEWERLINE
- EXIST. WATERLINE
- DRAINLINE
- SEWERLINE
- WATERLINE
- GRATED DRAIN INLET (GDI)
- STORM DRAIN MANHOLE (SDMH)
- SEWER MANHOLE (SMH)
- FIRE HYDRANT

GRAPHIC SCALE:

100' 50' 0 100' 200'

SCALE: 1" = 120'

RICHARD Y. SANTO
LICENSED PROFESSIONAL ENGINEER
NO. 8955-C
HAWAII USA

This work was prepared by me or under my supervision and is the property of SSFM International, Inc. and may not be used in whole or in part without the written consent of SSFM. Professional Engineers, Architects, Surveyors, and Landscape Architects

4/30/24
Expiration date of the license

NOTE: Contractor to check and verify dimensions at job before proceeding with work.

SSFM International
SSFM International, Inc.
501 Sumner Street
Suite 620
Honolulu, Hawaii 96817

REVISION	DATE	DESCRIPTION	MADE BY	APPROVED

PROJECT:
DEPARTMENT OF HAWAIIAN HOME LANDS
SITE AND INFRASTRUCTURE IMPROVEMENTS
FOR HANAPĒPĒ RESIDENTIAL LOTS, PHASE 2
TMK: (4) 1-8-007: 003 (PORTION) & (4) 2-8-007: 001 TO 050 (PORTION)
Hanapēpē, Waimea, Kaua'i, Hawai'i

OVERALL DRAINAGE PLAN - 2

THIS DOCUMENT CONTAINS INFORMATION PROPRIETARY TO SSFM INTERNATIONAL, INC., AND IS FURNISHED IN CONFIDENCE FOR THE LIMITED PURPOSE OF EVALUATION, BIDDING OR REVIEW. THIS DOCUMENT OR ITS CONTENTS MAY NOT BE USED FOR ANY OTHER PURPOSE AND MAY NOT BE REPRODUCED OR DISCLOSED TO OTHERS WITHOUT THE PRIOR WRITTEN CONSENT OF SSFM INTERNATIONAL, INC.

DATE
NOVEMBER 2022

SHEET NUMBER
C-111
18 OF 109 SHEETS

W:_CIVIL 3D PROJECTS\2018_021.001 DHHL HANAPEPE RESIDENTIAL SUBDIVISION PHASE 2\01 CE DWG\C-110 – C-111 OVERALL DRAINAGE PLANS.DWG 11/10/2022 1:06 PM EBORNALES

PRINTED: 11/10/22

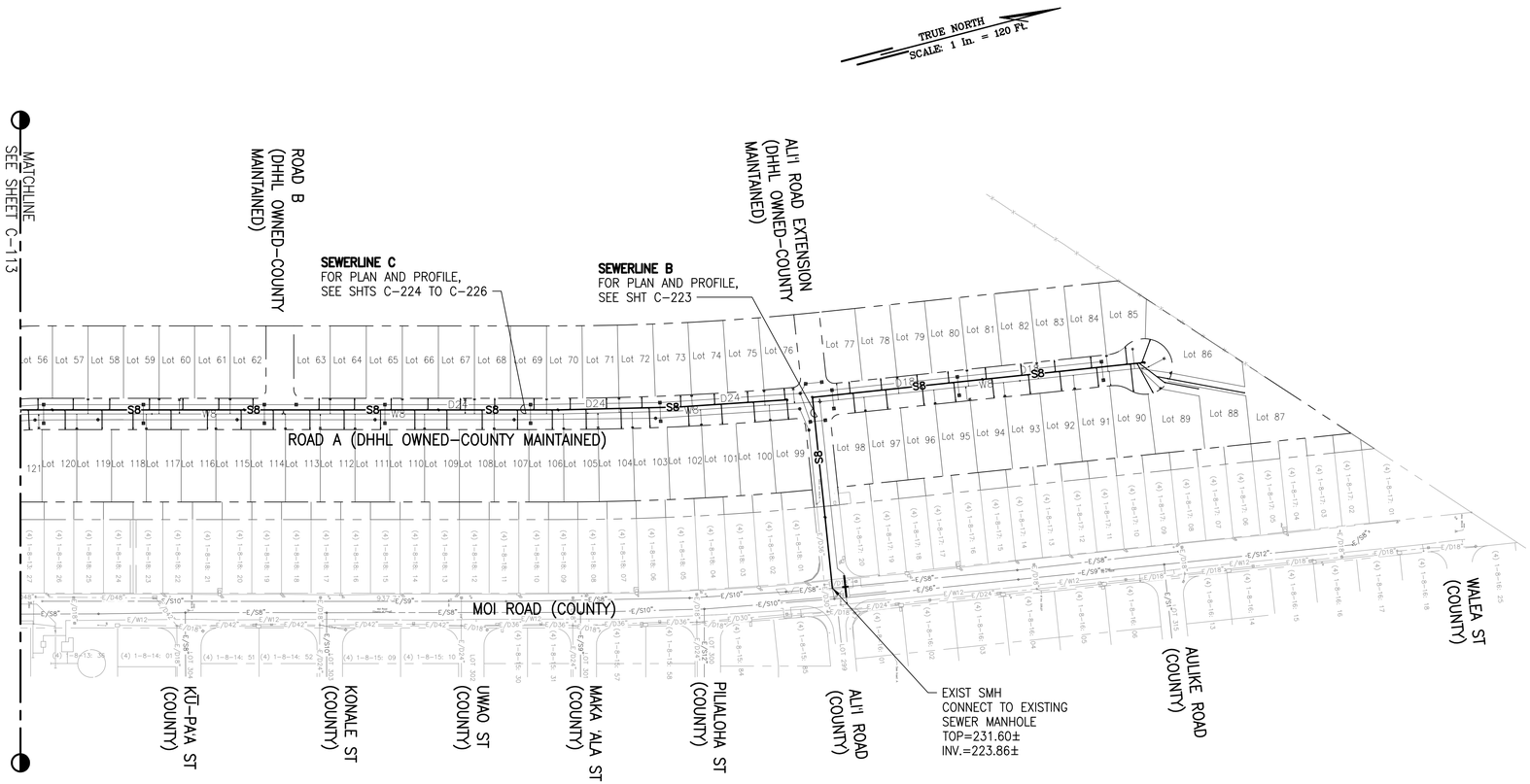

OVERALL SEWER PLAN – 1

SCALE: 1" = 120'

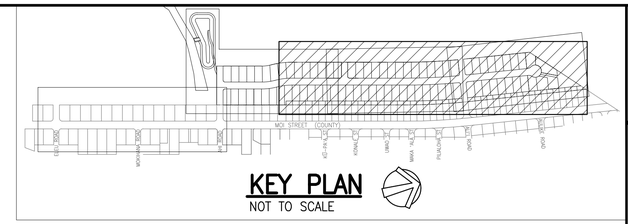

KEY PLAN

NOT TO SCALE

LEGEND:

- PROPERTY LINE
- LOT LINE
- EXIST. DRAINLINE
- EXIST. SEWERLINE
- EXIST. WATERLINE
- DRAINLINE
- SEWERLINE
- WATERLINE
- GRATED DRAIN INLET (GDI)
- STORM DRAIN MANHOLE (SDMH)
- SEWER MANHOLE (SMH)
- FIRE HYDRANT

NOTES:

1. THE CONTRACTOR SHALL PROVIDE TWO STAND-BY (SPARE) PUMPS FOR THE EXISTING SEWER PUMP STATIONS ON KAUMUALI'I ROAD AS PART OF THE CONSTRUCTION CONTRACT. THE CONTRACTOR SHALL COORDINATE WITH THE COUNTY ON THE PUMPS. SEE SHEET NO. C-003 "SEWER REPLACEMENT NOTES" AND SPECIFICATION SECTION 02530 "SANITARY SEWER SYSTEM".
2. FOR TIES FROM CONTROL POINT BENCHMARKS ALONG MOI ROAD TO SEWERLINE POINT OF CONNECTION, SEE SHEETS C-221 TO C-223

GRAPHIC SCALE:

100' 50' 0 100' 200'

SCALE: 1" = 120'

RICHARD Y. SANTO
LICENSED PROFESSIONAL ENGINEER
NO. 8955-C
HAWAII USA

This work was prepared by me or under my supervision and was prepared for the use of the Client. Use, reuse, or modification of this work by any person or entity other than the Client for any purpose or project other than the specific purpose intended by the Client will be at the Client's sole risk and without liability to the Professional Engineer, Architects, Surveyors, and Landscape Architects). 4/30/24
Signature

NOTE: Contractor to check and verify dimensions at job before proceeding with work.

SSFM International
SSFM International, Inc.
501 Sumner Street
Suite 620
Honolulu, Hawaii 96817

REVISION	DATE	DESCRIPTION	MADE BY	APPROVED

PROJECT:
DEPARTMENT OF HAWAIIAN HOME LANDS
SITE AND INFRASTRUCTURE IMPROVEMENTS
FOR HANAPĒPĒ RESIDENTIAL LOTS, PHASE 2
TMK: (4) 1-8-007: 003 (PORTION) & (4) 2-8-007: 001 TO 050 (PORTION)
Hanapēpē, Waimea, Kaua'i, Hawai'i

OVERALL SEWER PLAN - 1

THIS DOCUMENT CONTAINS INFORMATION PROPRIETARY TO SSFM INTERNATIONAL, INC., AND IS FURNISHED IN CONFIDENCE FOR THE LIMITED PURPOSE OF EVALUATION, BIDDING OR REVIEW. THIS DOCUMENT OR ITS CONTENTS MAY NOT BE USED FOR ANY OTHER PURPOSE AND MAY NOT BE PROVIDED OR DISCLOSED TO OTHERS WITHOUT THE PRIOR WRITTEN CONSENT OF SSFM INTERNATIONAL, INC.

DATE
NOVEMBER 2022

SHEET NUMBER
C-112

19 OF 109 SHEETS

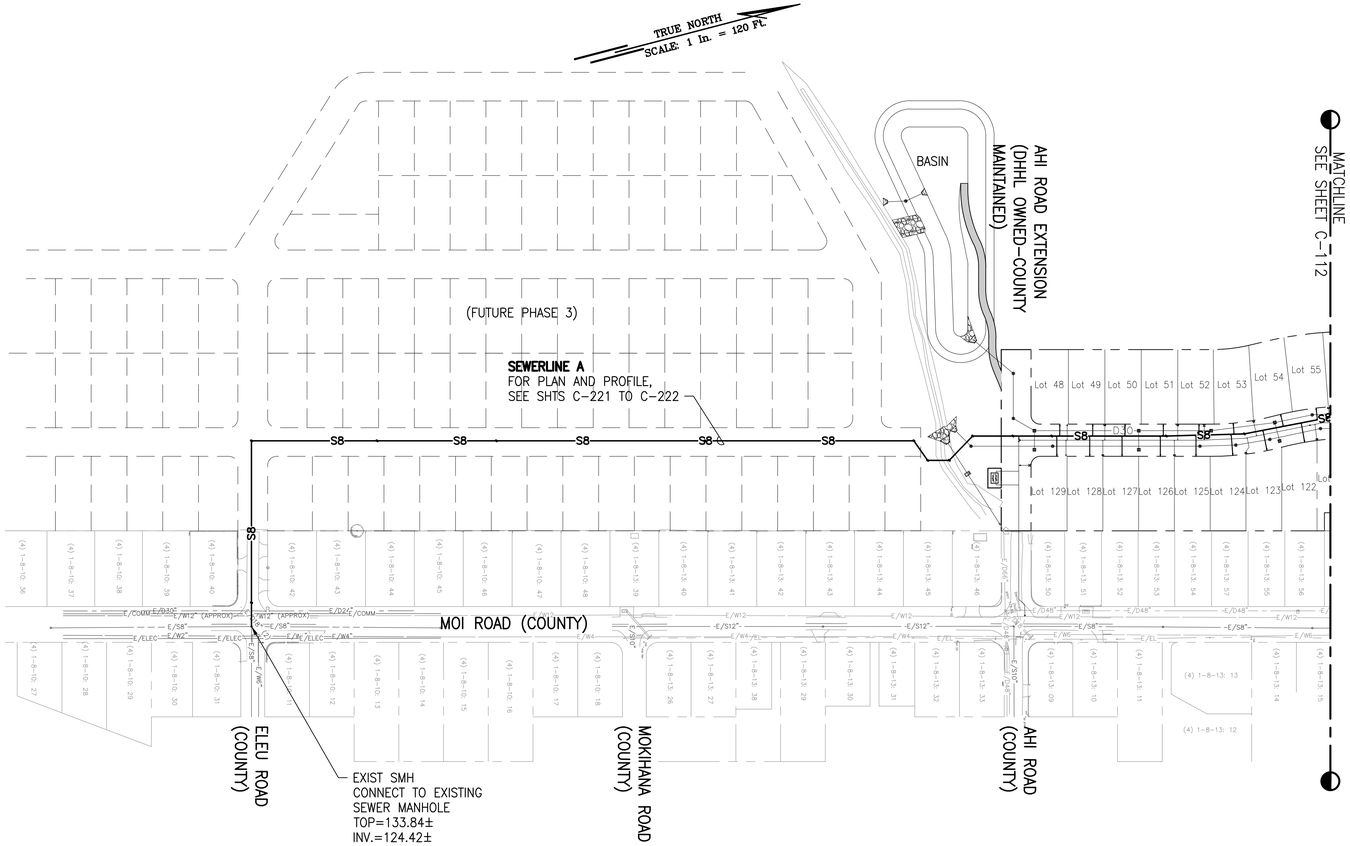

OVERALL SEWER PLAN – 2

SCALE: 1" = 120'

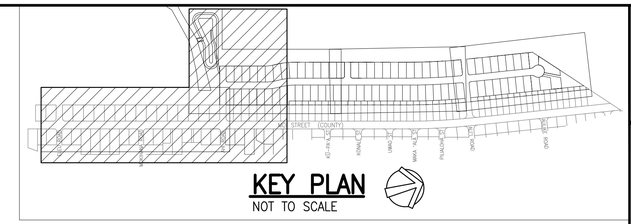

LEGEND:

- PROPERTY LINE
- LOT LINE
- EXIST. DRAINLINE
- EXIST. SEWERLINE
- EXIST. WATERLINE
- DRAINLINE
- SEWERLINE
- WATERLINE
- GRATED DRAIN INLET (GDI)
- STORM DRAIN MANHOLE (SDMH)
- SEWER MANHOLE (SMH)
- FIRE HYDRANT

NOTES:

1. THE CONTRACTOR SHALL PROVIDE TWO STAND-BY (SPARE) PUMPS FOR THE EXISTING SEWER PUMP STATIONS ON KAUMUALI'I ROAD AS PART OF THE CONSTRUCTION CONTRACT. THE CONTRACTOR SHALL COORDINATE WITH THE COUNTY ON THE PUMPS. SEE SHEET NO. C-003 "SEWER REPLACEMENT NOTES" AND SPECIFICATION SECTION 02530 "SANITARY SEWER SYSTEM".
2. FOR TIES FROM CONTROL POINT BENCHMARKS ALONG MOI ROAD TO SEWERLINE POINT OF CONNECTION, SEE SHEETS C-221 TO C-223

GRAPHIC SCALE:

100' 50' 0 100' 200'

SCALE: 1" = 120'

RICHARD Y. SANTO
LICENSED PROFESSIONAL ENGINEER
NO. 8955-C
HAWAII USA

This work was prepared by me or under my supervision and I certify that to the best of my knowledge, information and belief, the work was done in accordance with the applicable Standards of Professional Engineering Practice, Services, and Limitations Act(s). 4/30/24
Signature Date
My license expires on the end of the 4th month following the month of the license date.

NOTE: Contractor to check and verify dimensions at job before proceeding with work.

SSFM International, Inc.
501 Sumner Street
Suite 620
Honolulu, Hawaii 96817

REVISION	DATE	DESCRIPTION	MADE BY	APPROVED

PROJECT:
DEPARTMENT OF HAWAIIAN HOME LANDS
SITE AND INFRASTRUCTURE IMPROVEMENTS
FOR HANAPĒPĒ RESIDENTIAL LOTS, PHASE 2
TMK: (4) 1-8-007: 003 (PORTION) & (4) 2-8-007: 001 TO 050 (PORTION)
Hanapēpē, Waimea, Kaua'i, Hawai'i

OVERALL SEWER PLAN - 2

THIS DOCUMENT CONTAINS INFORMATION PROPRIETARY TO SSFM INTERNATIONAL, INC., AND IS FURNISHED IN CONFIDENCE FOR THE LIMITED PURPOSE OF EVALUATION, BIDDING OR REVIEW. THIS DOCUMENT OR ITS CONTENTS MAY NOT BE USED FOR ANY OTHER PURPOSE AND MAY NOT BE REPRODUCED OR DISCLOSED TO OTHERS WITHOUT THE PRIOR WRITTEN CONSENT OF SSFM INTERNATIONAL, INC.

DATE
NOVEMBER 2022

SHEET NUMBER
C-113
20 OF 109 SHEETS

W:_CIVIL 3D PROJECTS\2018_021.001 DHHL HANAPEPE RESIDENTIAL SUBDIVISION PHASE 2\01 CE DWG\C-112 - C-113 OVERALL SEWER PLANS.DWG 11/10/2022 1:18 PM EBORNALES

PRINTED: 11/10/22

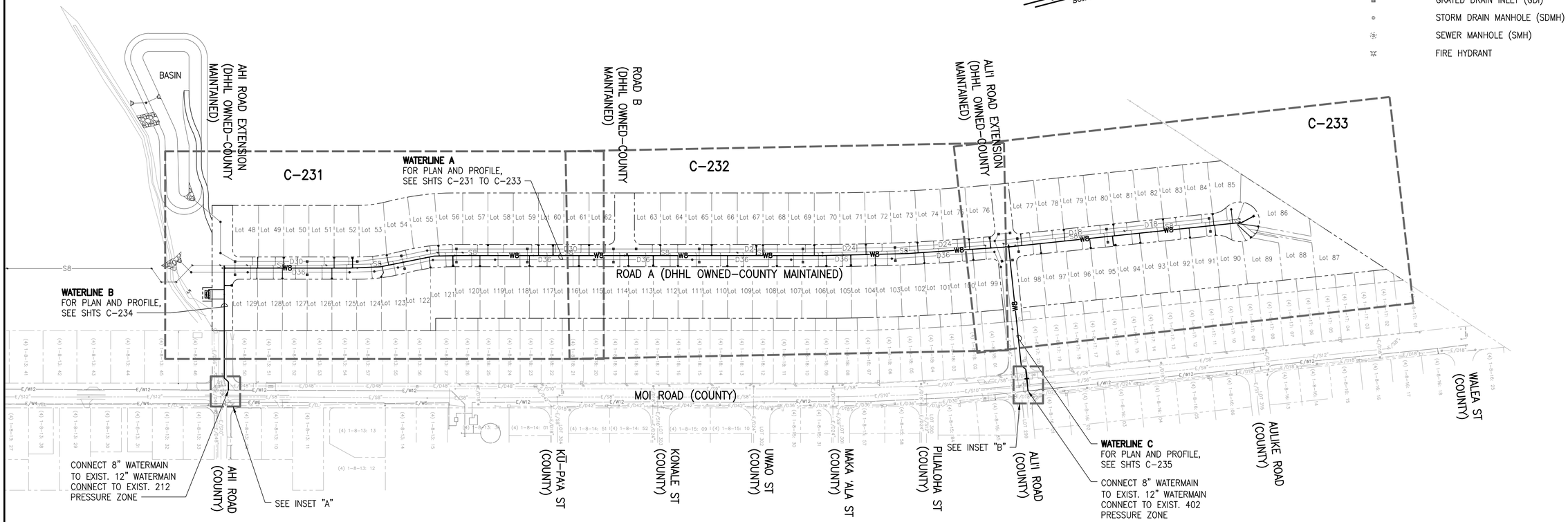

OVERALL WATER PLAN
SCALE: 1" = 120'

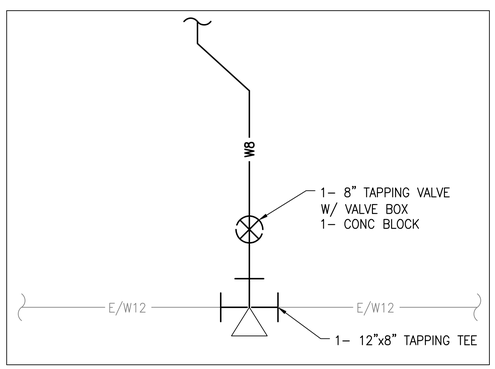

2 INSET "A"
C-114
NOT TO SCALE

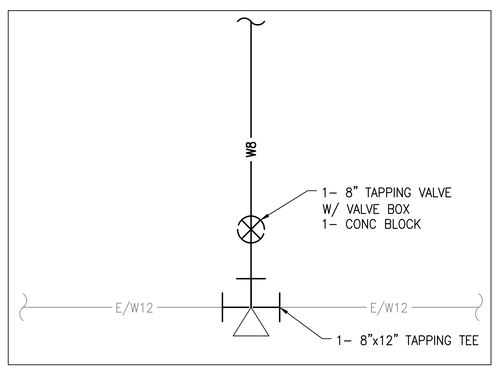

1 INSET "B"
C-114
NOT TO SCALE

GRAPHIC SCALE:
100' 50' 0 100' 200'
SCALE: 1" = 120'

RICHARD Y. SANTO
LICENSED PROFESSIONAL ENGINEER
NO. 8955-C
HAWAII USA

This work was prepared by me or under my supervision and is protected by the laws of the United States Copyright Act (Title 17, United States Code). Unauthorized use of these documents without the permission of the Professional Engineer, Architect, Surveyor, and Landscape Architect) is prohibited.

4/30/24
Date of Signature

NOTE: Contractor to check and verify dimensions at job before proceeding with work.

SSFM International
SSFM International, Inc.
501 Sumner Street
Suite 620
Honolulu, Hawaii 96817

REVISION	DATE	DESCRIPTION	MADE BY	APPROVED

PROJECT:
DEPARTMENT OF HAWAIIAN HOME LANDS
SITE AND INFRASTRUCTURE IMPROVEMENTS
FOR HANAPĒPĒ RESIDENTIAL LOTS, PHASE 2
TMK: (4) 1-8-007: 003 (PORTION) & (4) 2-8-007: 001 TO 050 (PORTION)
Hanapēpē, Waimea, Kaua'i, Hawai'i

OVERALL WATER PLAN

THIS DOCUMENT CONTAINS INFORMATION PROPRIETARY TO SSFM INTERNATIONAL, INC., AND IS FURNISHED IN CONFIDENCE FOR THE LIMITED PURPOSE OF EVALUATION, BIDDING OR REVIEW. THIS DOCUMENT OR ITS CONTENTS MAY NOT BE USED FOR ANY OTHER PURPOSE AND MAY NOT BE REPRODUCED OR DISCLOSED TO OTHERS WITHOUT THE PRIOR WRITTEN CONSENT OF SSFM INTERNATIONAL, INC.

DATE
NOVEMBER 2022

SHEET NUMBER
C-114
21 OF 109 SHEETS

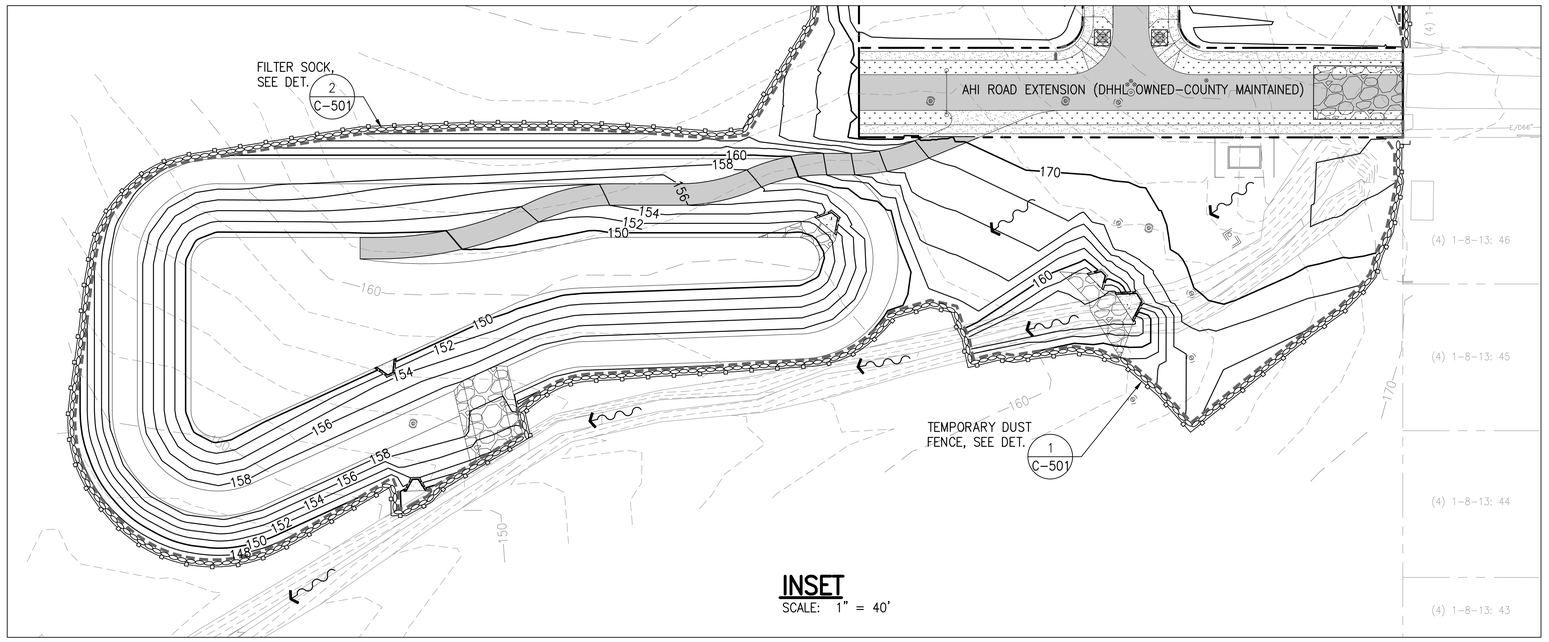

INSET
SCALE: 1" = 40'

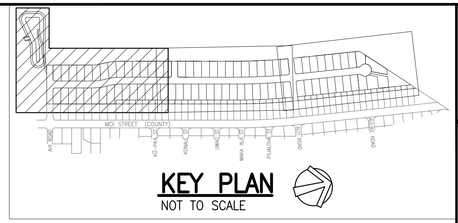

LEGEND:

- CONSTRUCTION INGRESS/EGRESS, SEE DET. 3 C-501
- PROPERTY LINE
- 705 EXISTING CONTOURS
- 705 PROPOSED CONTOURS
- LIMITS OF GRADING AND DISTURBANCE
- FILTER SOCK PERIMETER CONTROL, SEE DET. 2 C-501
- TEMPORARY DUST FENCE, SEE DET. 1 C-501
- EXISTING RUNOFF DIRECTION
- PROPOSED RUNOFF DIRECTION
- INLET PROTECTION, SEE DET. 4 C-501

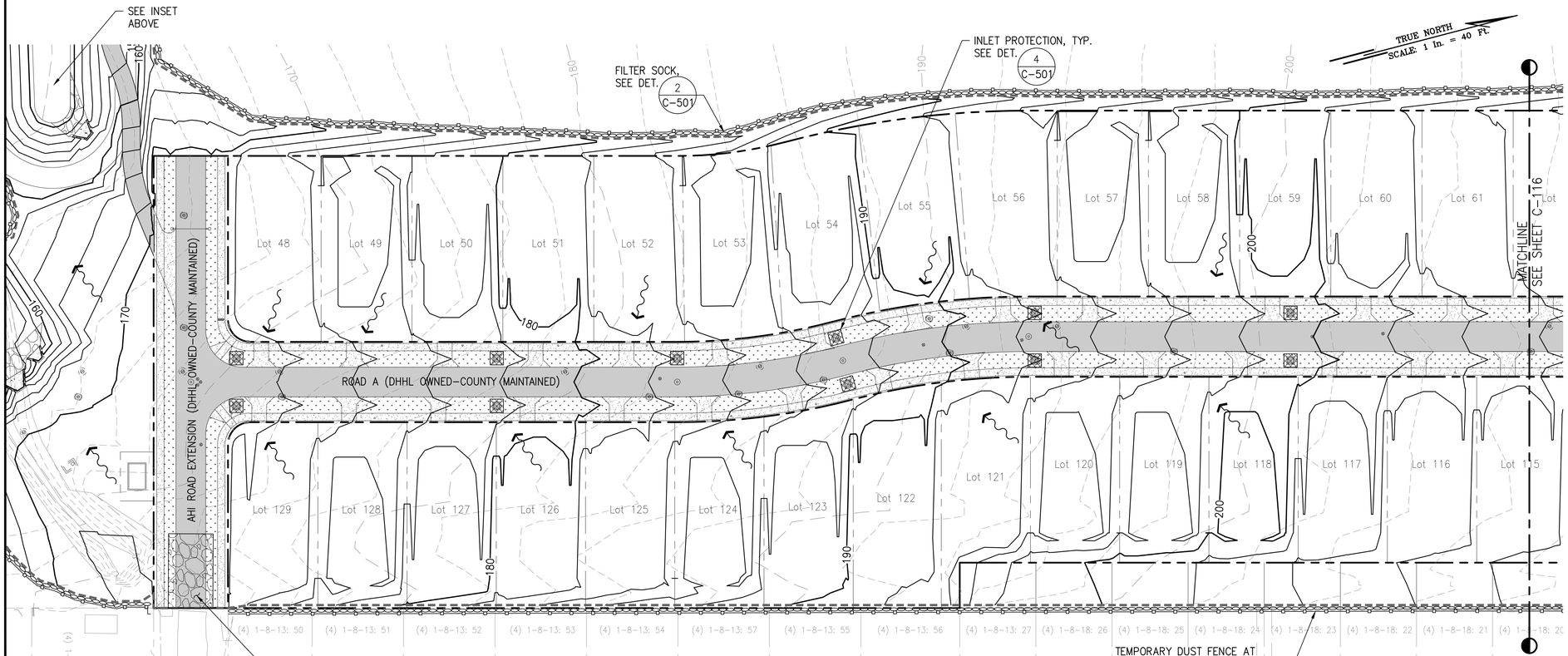

EROSION AND SEDIMENT CONTROL PLAN – 1
SCALE: 1" = 40'

GRAPHIC SCALE:
40' 20' 0 40' 80'
SCALE: 1" = 40'

RICHARD Y. SANTO
LICENSED PROFESSIONAL ENGINEER
NO. 8955-C
HAWAII USA

This work was prepared by me or under my supervision for the exclusive use of SSFM International, Inc. and its clients. Any reuse of this work for other projects without written verification by the Professional Engineer, Architect, Surveyor, and/or Landscape Architect) 4/30/24 shall be at the user's sole risk and without liability to the Engineer

NOTE: Contractor to check and verify dimensions at job before proceeding with work.

SSFM International, Inc.
501 Sumner Street
Suite 620
Honolulu, Hawaii 96817

REVISION	DATE	DESCRIPTION	MADE BY	APPROVED

PROJECT:
DEPARTMENT OF HAWAIIAN HOME LANDS
SITE AND INFRASTRUCTURE IMPROVEMENTS
FOR HANAPĒPĒ RESIDENTIAL LOTS, PHASE 2
TMK: (4) 1-8-007: 003 (PORTION) & (4) 2-8-007: 001 TO 050 (PORTION)
Hanapēpē, Waimea, Kaua'i, Hawai'i

EROSION AND SEDIMENT CONTROL PLAN - 1

THIS DOCUMENT CONTAINS INFORMATION PROPRIETARY TO SSFM INTERNATIONAL, INC. AND IS FURNISHED IN CONFIDENCE FOR THE LIMITED PURPOSE OF EVALUATION, BIDDING OR REVIEW. THIS DOCUMENT OR ITS CONTENTS MAY NOT BE USED FOR ANY OTHER PURPOSE AND MAY NOT BE REPRODUCED, LOANED OR DISCLOSED TO OTHERS WITHOUT THE PRIOR WRITTEN CONSENT OF SSFM INTERNATIONAL, INC.

DATE
NOVEMBER 2022

SHEET NUMBER
C-115
22 OF 109 SHEETS

PRINTED: 11/10/22

W:_CIVIL 3D PROJECTS\2018_021.001 DHHL HANAPEPE RESIDENTIAL SUBDIVISION PHASE 2\01 CE DWG\C-115 - C-116 EROSION AND SEDIMENT CONTROL PLANS.DWG 11/10/2022 1:34 PM EBORNALES

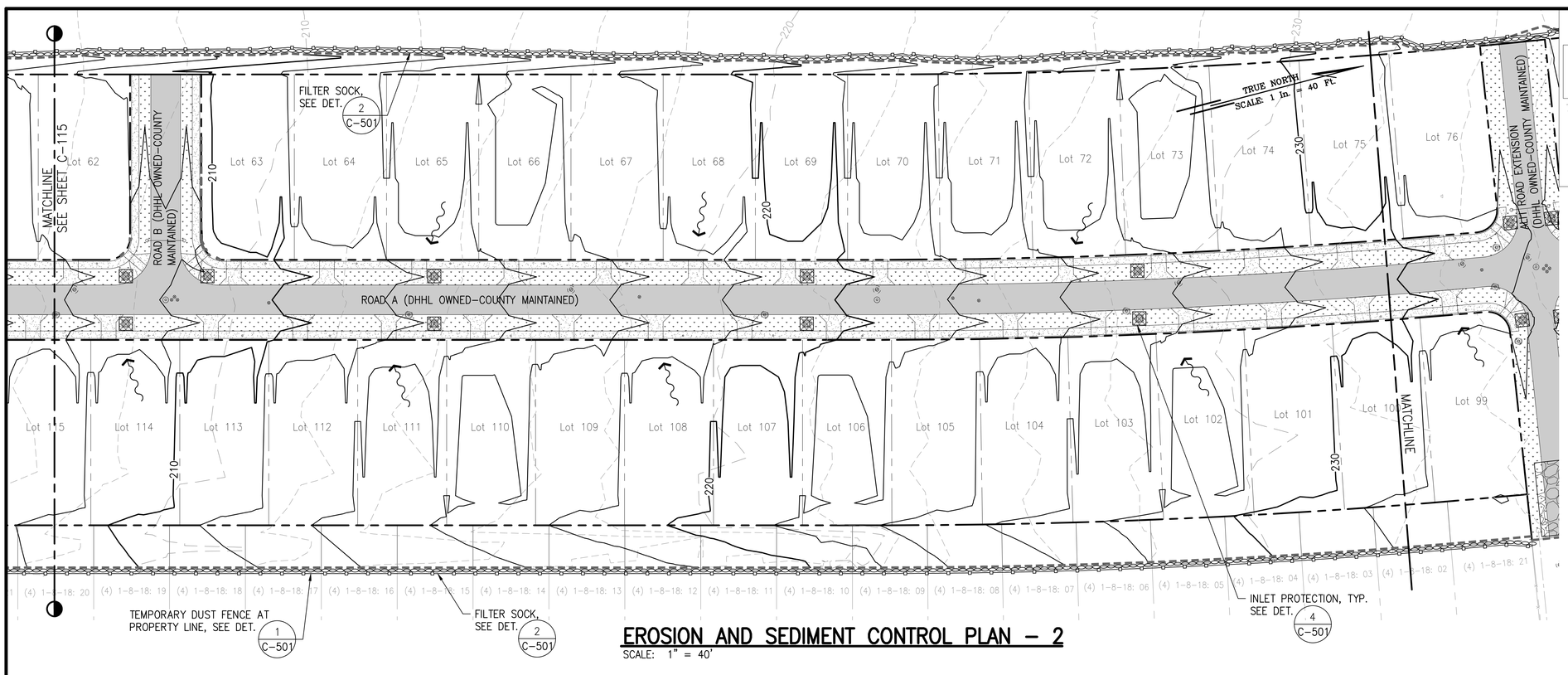

KEY PLAN
NOT TO SCALE

LEGEND:

- CONSTRUCTION INGRESS/EGRESS, SEE DET. 3 C-501
- PROPERTY LINE
- 705 EXISTING CONTOURS
- 705 PROPOSED CONTOURS
- LIMITS OF GRADING AND DISTURBANCE
- FILTER SOCK PERIMETER CONTROL, SEE DET. 2 C-501
- TEMPORARY DUST FENCE, SEE DET. 1 C-501
- EXISTING RUNOFF DIRECTION
- PROPOSED RUNOFF DIRECTION
- INLET PROTECTION, SEE DET. 4 C-501

EROSION AND SEDIMENT CONTROL PLAN – 2
SCALE: 1" = 40'

EROSION AND SEDIMENT CONTROL PLAN – 3
SCALE: 1" = 40'

GRAPHIC SCALE:
40' 20' 0 40' 80'
SCALE: 1" = 40'

RICHARD Y. SANTO
LICENSED PROFESSIONAL ENGINEER
NO. 8955-C
HAWAII USA

This work was prepared by me or under my supervision and is not to be used in whole or in part for any other project without written authorization by SSFM International, Inc. 4/30/24
Signature Date

NOTE: Contractor to check and verify dimensions at job before proceeding with work.

SSFM International, Inc.
501 Sumner Street
Suite 620
Honolulu, Hawaii 96817

REVISION	DATE	DESCRIPTION	MADE BY	APPROVED

PROJECT:
DEPARTMENT OF HAWAIIAN HOME LANDS
SITE AND INFRASTRUCTURE IMPROVEMENTS
FOR HANAPĒPĒ RESIDENTIAL LOTS, PHASE 2
TMK: (4) 1-8-007: 003 (PORTION) & (4) 2-8-007: 001 TO 050 (PORTION)
Hanapēpē, Waimea, Kaua'i, Hawai'i

EROSION AND SEDIMENT CONTROL PLAN - 2

THIS DOCUMENT CONTAINS INFORMATION PROPRIETARY TO SSFM INTERNATIONAL, INC., AND IS FURNISHED IN CONFIDENCE FOR THE LIMITED PURPOSE OF EVALUATION, BIDDING OR REVIEW. THIS DOCUMENT OR ITS CONTENTS MAY NOT BE USED FOR ANY OTHER PURPOSE AND MAY NOT BE REPRODUCED OR DISCLOSED TO OTHERS WITHOUT THE PRIOR WRITTEN CONSENT OF SSFM INTERNATIONAL, INC.

DATE
NOVEMBER 2022

SHEET NUMBER
C-116
23 OF 109 SHEETS

W:_CIVIL 3D PROJECTS\2018_021.001 DHHL HANAPEPE RESIDENTIAL SUBDIVISION PHASE 2\01 CE DWGS\C-115 - C-116 EROSION AND SEDIMENT CONTROL PLANS.DWG 11/10/2022 1:33 PM EBORNALES

PRINTED: 11/10/22

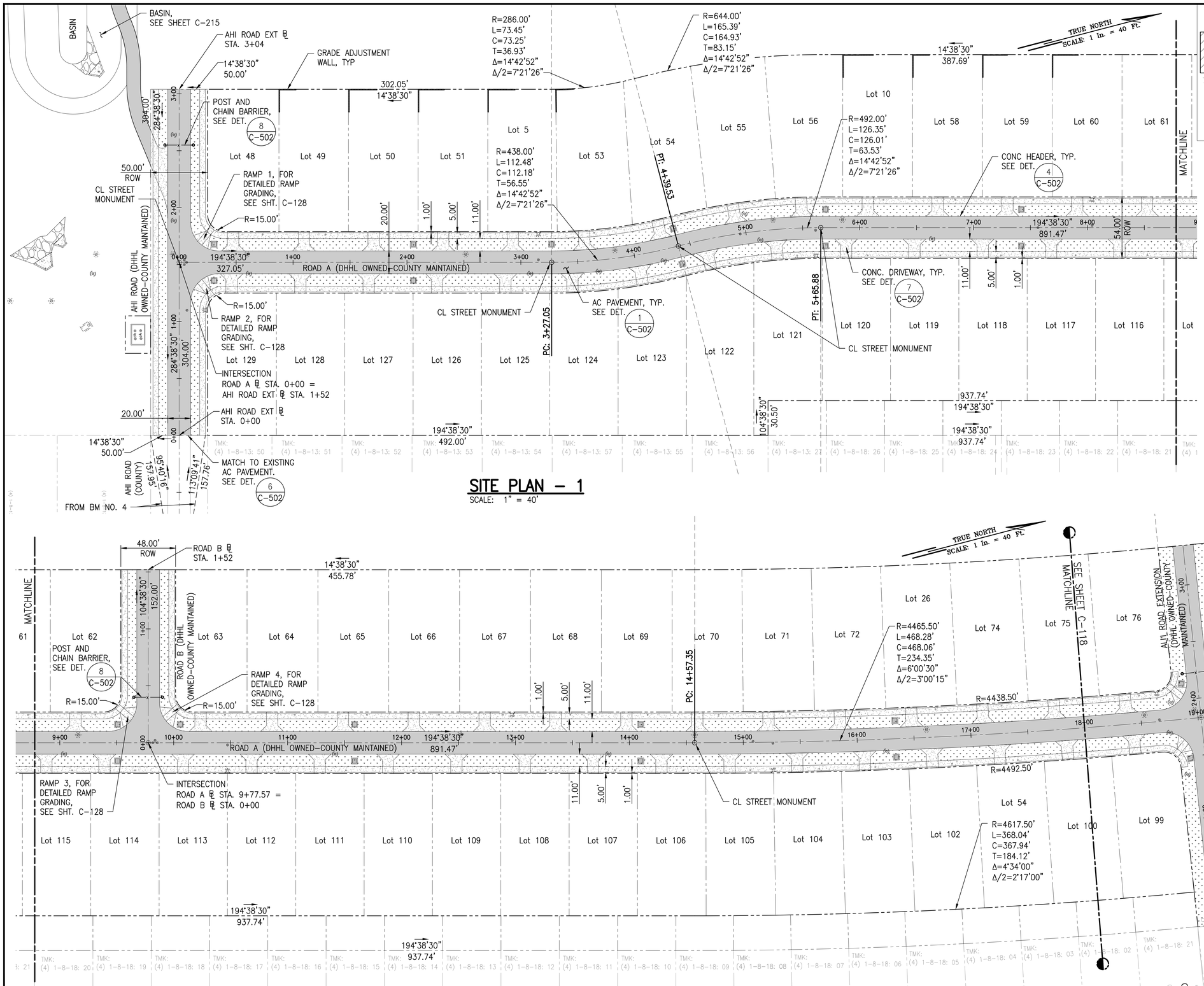

SITE PLAN – 1
SCALE: 1" = 40'

SITE PLAN – 1
SCALE: 1" = 40'

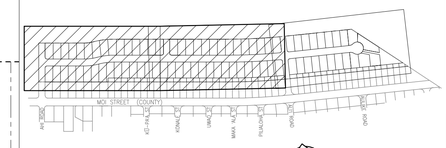

KEY PLAN
NOT TO SCALE

LEGEND:

- PROPERTY LINE
- LOT LINE
- ASPHALTIC CONCRETE PAVEMENT
- CONCRETE SIDEWALK/DRIVEWAY
- GRASSED SWALE

NOTES:

1. FOR ROADWAY TYPICAL SECTIONS, SEE SHEET C-105.
2. FOR RAMP DETAILED GRADING, SEE SHEET C-128.
3. FOR GRADE ADJUSTMENT WALL, SEE SHEETS C-127 AND C-502.
4. FOR CENTERLINE STREET MONUMENT, SEE DPW STD DETAIL R-14.
5. FOR BENCHMARK LOCATIONS, SEE SHEET C-106.

BASELINE TIES

1.	BM NO. 4 BACKSIGHT TO BM NO. 1 194°42'39" AT 817.37'
2.	BM NO. 4 TO AHI ROAD EXT. ℄ STA. 0+00 104°46'41" AT 156.02'
3.	BM NO. 4 TO INTERSECTION RD A ℄ STA. 0+00 = AHI ROAD EXT. ℄ STA. 1+52 104°42'39" AT 308.02'
4.	BM NO. 4 TO AHI ROAD EXT. ℄ STA. 3+04 104°41'17" AT 460.02'

GRAPHIC SCALE:
40' 20' 0 40' 80'
SCALE: 1" = 40'

RICHARD Y. SANTO
LICENSED PROFESSIONAL ENGINEER
NO. 8955-C
HAWAII USA

This work was prepared by me or under my supervision and I certify that to the best of my knowledge, I am duly licensed Professional Engineer. Architect, Surveyor, and Landscape Architect. 4/30/24 Expiration date of the license

NOTE: Contractor to check and verify dimensions at job before proceeding with work.

SSFM International, Inc.
501 Sumner Street
Suite 620
Honolulu, Hawaii 96817

REVISION	DATE	DESCRIPTION	MADE BY	APPROVED

PROJECT:
DEPARTMENT OF HAWAIIAN HOME LANDS
SITE AND INFRASTRUCTURE IMPROVEMENTS
FOR HANAPĒPĒ RESIDENTIAL LOTS, PHASE 2
TMK: (4) 1-8-007: 003 (PORTION) & (4) 2-8-007: 001 TO 050 (PORTION)
Hanapēpē, Waimea, Kaua'i, Hawai'i

SITE PLAN - 1

THIS DOCUMENT CONTAINS INFORMATION PROPRIETARY TO SSFM INTERNATIONAL, INC., AND IS FURNISHED IN CONFIDENCE FOR THE LIMITED PURPOSE OF EVALUATION, BIDDING OR REVIEW. THIS DOCUMENT OR ITS CONTENTS MAY NOT BE USED FOR ANY PURPOSE OTHER THAN THAT AUTHORIZED BY SSFM INTERNATIONAL, INC. AND NO RIGHTS ARE CONFERRED TO OWNERS OR OTHERS WITHOUT THE PRIOR WRITTEN CONSENT OF SSFM INTERNATIONAL, INC.

DATE
NOVEMBER 2022

SHEET NUMBER
C-117
24 OF 109 SHEETS

W:_CIVIL 3D PROJECTS\2018_021.001 DHHL HANAPEPE RESIDENTIAL SUBDIVISION PHASE 2\01 CE DWG\C-117 - C-118 SITE PLANS.DWG 11/10/2022 1:55 PM EBORNALES

PRINTED: 11/10/22

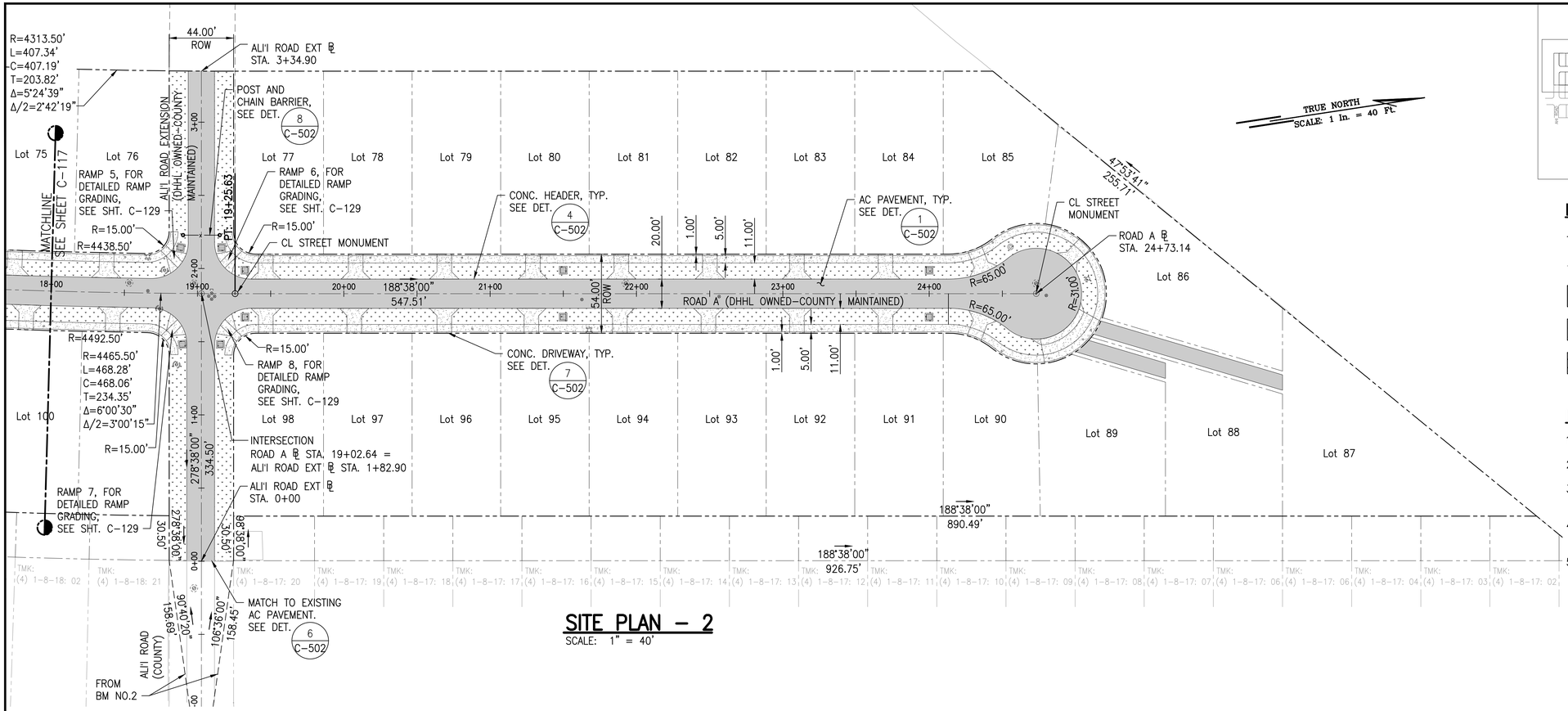

SITE PLAN – 2

SCALE: 1" = 40'

TRUE NORTH
SCALE: 1 In. = 40 Ft.

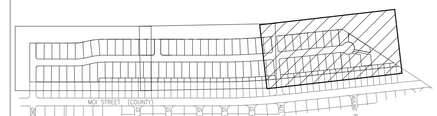

KEY PLAN

NOT TO SCALE

LEGEND:

- PROPERTY LINE
- LOT LINE
- ASPHALTIC CONCRETE PAVEMENT
- CONCRETE SIDEWALK/DRIVEWAY
- GRASSED SWALE

NOTES:

1. FOR ROADWAY TYPICAL SECTIONS, SEE SHEET C-105.
2. FOR RAMP DETAILED GRADING, SEE SHEET C-128.
3. FOR GRADE ADJUSTMENT WALL, SEE SHEETS C-127 AND C-502.
4. FOR CENTERLINE STREET MONUMENT, SEE DPW STD DETAIL R-14.
5. FOR BENCHMARK LOCATIONS, SEE SHEET C-106.

BASELINE TIES

1.	BM NO. 2 BACKSIGHT TO BM NO. 3 188°37'58" AT 1074.97'
2.	BM NO. 2 BACKSIGHT TO BM NO. 1 13°24'34" AT 1118.06'
3.	BM NO. 2 TO ALI1 ROAD EXT. ℄ STA. 0+00 98°38'27" AT 156.61'
4.	BM NO. 2 TO INTERSECTION RD A ℄ STA. 19+02.64 = ALI1 ROAD EXT. ℄ STA. 1+82.90 98°38'13" AT 339.50'
5.	BM NO. 2 TO ALI1 ROAD EXT. ℄ STA. 3+34.90 98°38'09" AT 491.51'

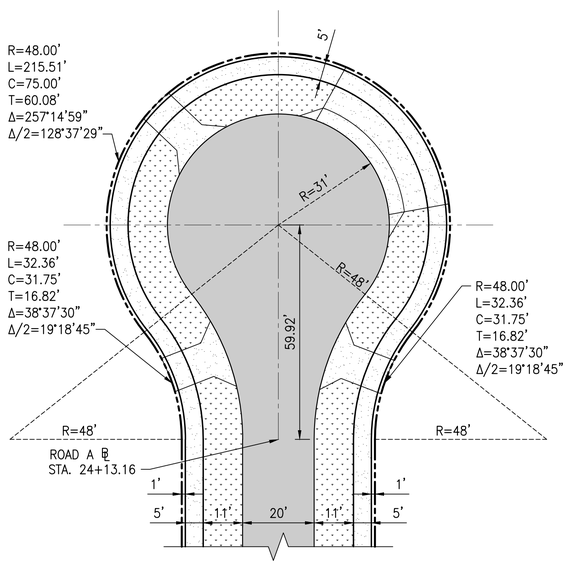

1 CUL-DE-SAC DETAIL

C-118 NOT TO SCALE

GRAPHIC SCALE:

40' 20' 0 40' 80'

SCALE: 1" = 40'

RICHARD Y. SANTO
LICENSED PROFESSIONAL ENGINEER
NO. 8955-C
HAWAII USA

This work was prepared by me or under my supervision and is not to be used in whole or in part for any construction unless it bears the seal of a Professional Engineer, Architect, Surveyor, and/or Landscape Architect.

4/30/24
Expiration date of the license

NOTE: Contractor to check and verify dimensions at job before proceeding with work.

SSFM International, Inc.
501 Sumner Street
Suite 620
Honolulu, Hawaii 96817

REVISION	DATE	DESCRIPTION	MADE BY	APPROVED

PROJECT:
DEPARTMENT OF HAWAIIAN HOME LANDS
SITE AND INFRASTRUCTURE IMPROVEMENTS
FOR HANAPĒPĒ RESIDENTIAL LOTS, PHASE 2
TMK: (4) 1-8-007: 003 (PORTION) & (4) 2-8-007: 001 TO 050 (PORTION)
Hanapēpē, Waimea, Kaua'i, Hawai'i

SITE PLAN - 2

THIS DOCUMENT CONTAINS INFORMATION PROPRIETARY TO SSFM INTERNATIONAL, INC. AND IS FURNISHED IN CONFIDENCE FOR THE LIMITED PURPOSE OF EVALUATION, BIDDING OR REVIEW. THIS DOCUMENT OR ITS CONTENTS MAY NOT BE USED FOR ANOTHER PURPOSE AND MAY NOT BE REPRODUCED OR DISCLOSED TO OTHERS WITHOUT THE PRIOR WRITTEN CONSENT OF SSFM INTERNATIONAL, INC.

DATE
NOVEMBER 2022

SHEET NUMBER
C-118

25 OF 109 SHEETS

W:_CIVIL 3D PROJECTS\2018_021.001 DHHL HANAPEPE RESIDENTIAL SUBDIVISION PHASE 2\01 CE DWG\C-117 – C-118 SITE PLANS.DWG 11/10/2022 1:38 PM EBORNALES

PRINTED: 11/10/22

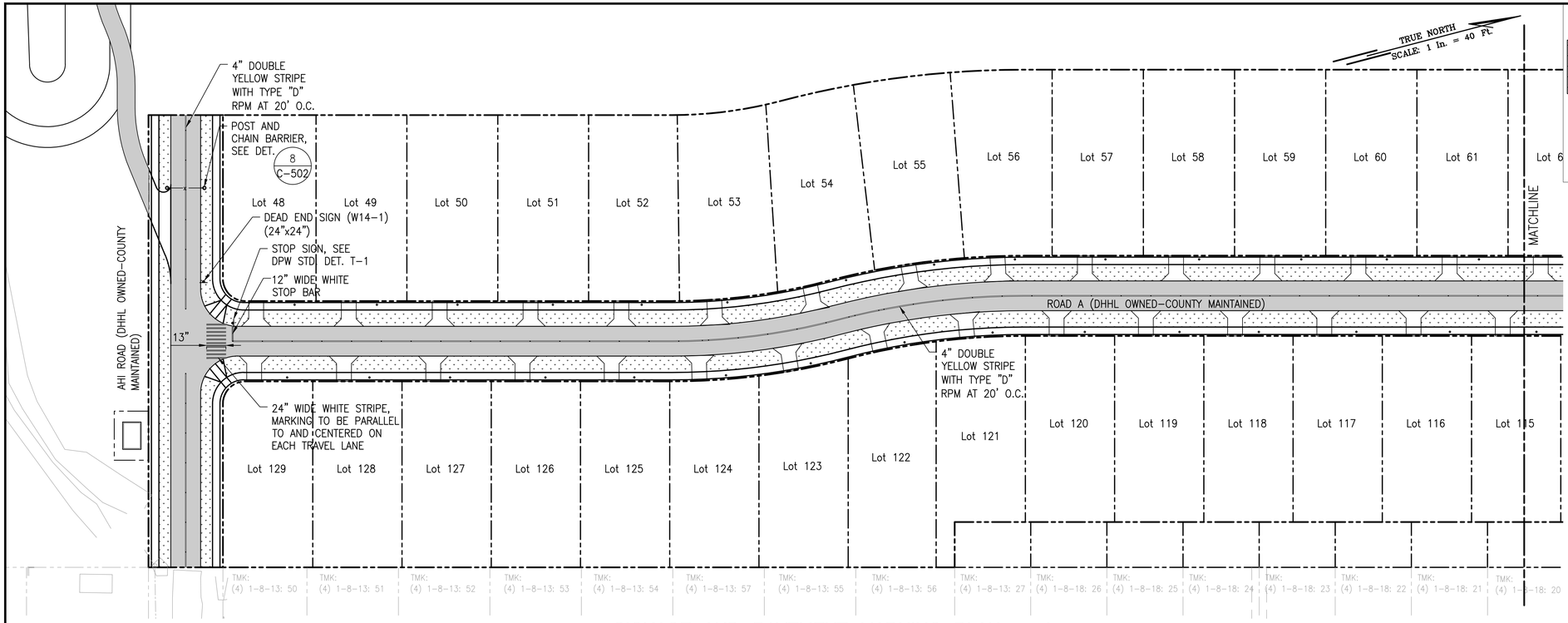

SIGNAGE AND PAVEMENT MARKING PLAN – 1

SCALE: 1" = 40'

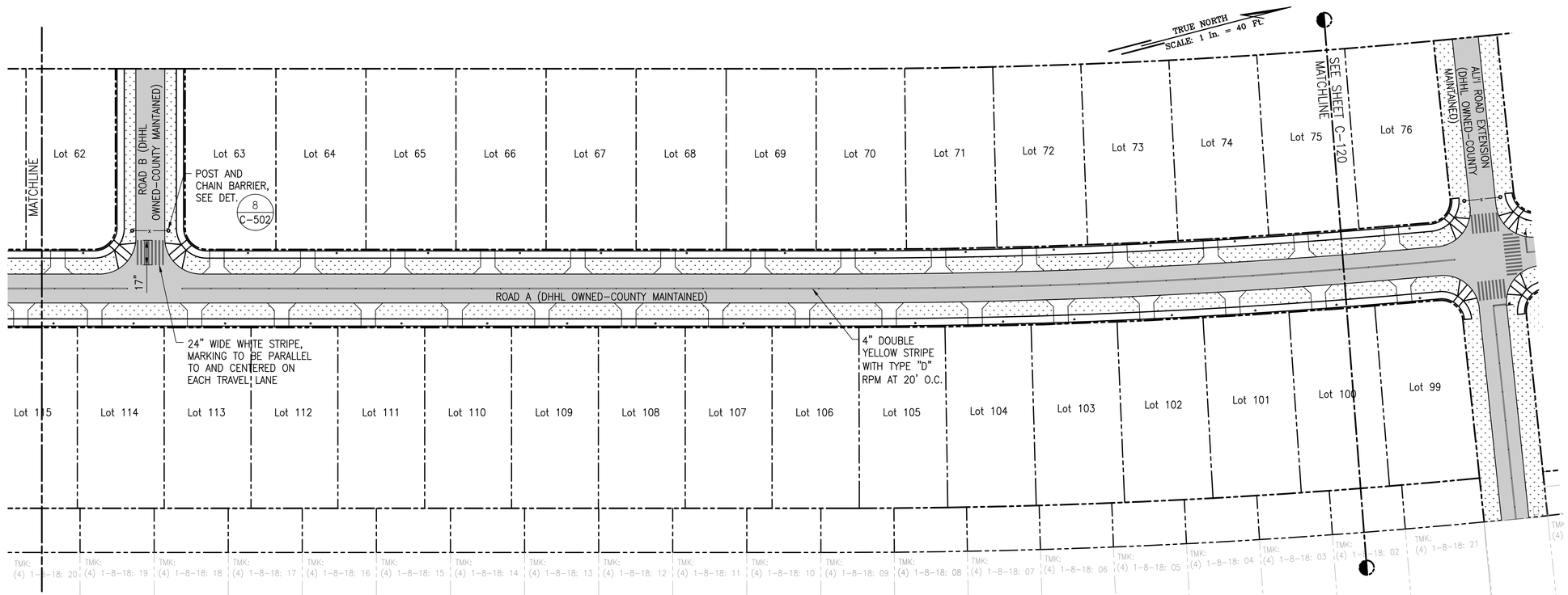

SIGNAGE AND PAVEMENT MARKING PLAN – 1

SCALE: 1" = 40'

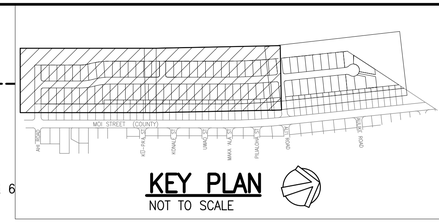

KEY PLAN

NOT TO SCALE

LEGEND:

PROPERTY LINE

TMK: LINE

NOTES:

1. FOR TYPICAL INTERSECTION STRIPING AND SIGNAGE DETAIL, SEE SHEET C-120.
2. ALL STRIPING SHALL CONFORM TO THE LATEST EDITION OF THE "MANUAL ON UNIFORM TRAFFIC CONTROL DEVICES" (MUTCD).
3. ALL TRAFFIC PAINT SHALL BE REFLECTORIZED AND SHALL BE APPROVED BY THE ENGINEER.

GRAPHIC SCALE:

40' 20' 0 40' 80'

SCALE: 1" = 40'

RICHARD Y. SANTO
LICENSED PROFESSIONAL ENGINEER
NO. 8955-C
HAWAII USA

This work was prepared by me or under my supervision and I am a duly licensed professional engineer. (Chapter 464, Hawaii Revised Statutes, Professional Engineers, Architects, Surveyors, and Landscape Architects)

4/30/24
Date of Signature

NOTE: Contractor to check and verify dimensions at job before proceeding with work.

SSFM International, Inc.
501 Sumner Street
Suite 620
Honolulu, Hawaii 96817

REVISION	DATE	DESCRIPTION	MADE BY	APPROVED

PROJECT:
DEPARTMENT OF HAWAIIAN HOME LANDS
SITE AND INFRASTRUCTURE IMPROVEMENTS
FOR HANAPĒPĒ RESIDENTIAL LOTS, PHASE 2
TMK: (4) 1-8-007: 003 (PORTION) & (4) 2-8-007: 001 TO 050 (PORTION)
Hanapēpē, Waimea, Kaua'i, Hawai'i

SIGNAGE AND PAVEMENT MARKING PLAN - 1

THIS DOCUMENT CONTAINS INFORMATION PROPRIETARY TO SSFM INTERNATIONAL, INC. AND IS FURNISHED IN CONFIDENCE FOR THE LIMITED PURPOSE OF EVALUATION, BIDDING OR REVIEW. THIS DOCUMENT OR ITS CONTENTS MAY NOT BE USED FOR ANY OTHER PURPOSE AND MAY NOT BE DISCLOSED OR APPEAR IN PART OR WHOLE TO OTHERS WITHOUT THE PRIOR WRITTEN CONSENT OF SSFM INTERNATIONAL, INC.

DATE
NOVEMBER 2022

SHEET NUMBER
C-119
26 OF 109 SHEETS

PRINTED: 11/14/22

W:_CIVIL 3D PROJECTS\2018_021.001 DHHL HANAPEPE RESIDENTIAL SUBDIVISION PHASE 2\01 CE DWG\C-119 - C-120 SIGNING AND PAVEMENT MARKING PLANS.DWG 11/14/2022 3:23 PM EBORNALES

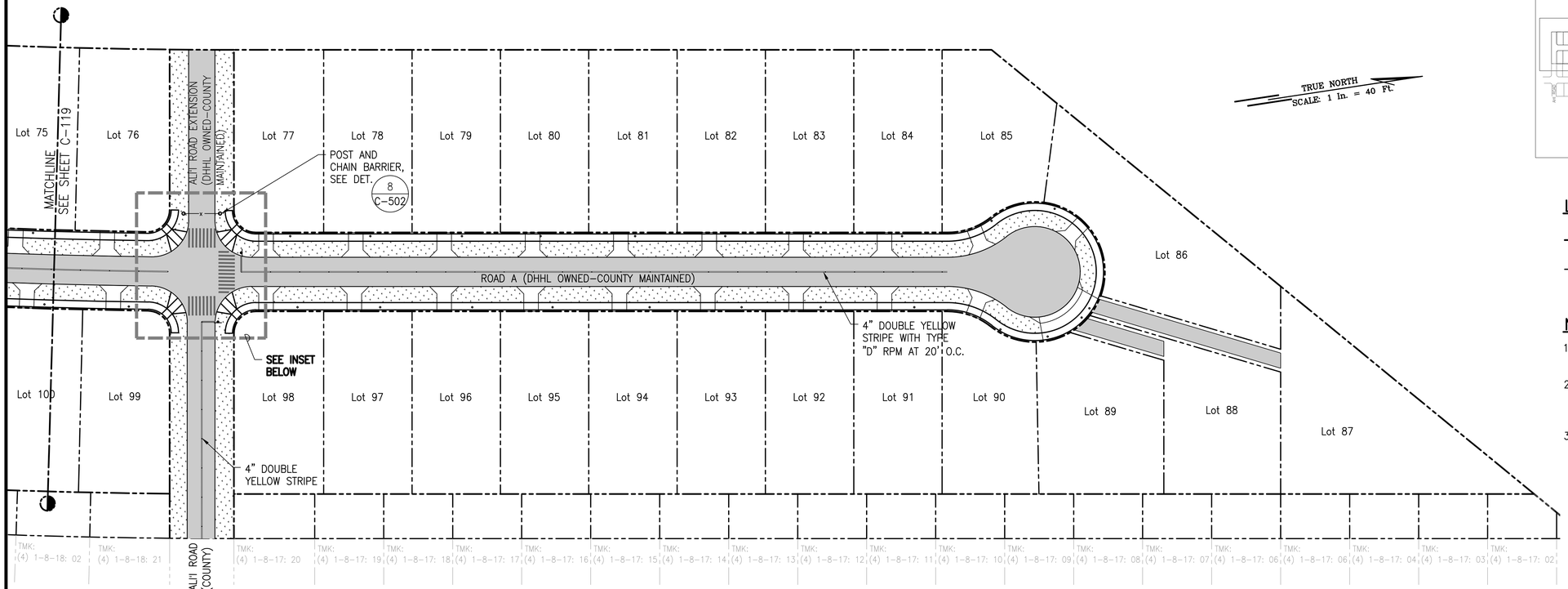

TRUE NORTH
SCALE: 1 In. = 40 Ft.

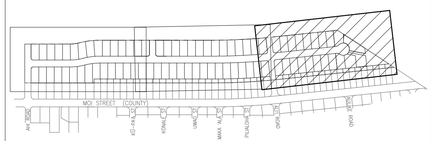

KEY PLAN
NOT TO SCALE

LEGEND:

PROPERTY LINE

TMK: LINE

NOTES:

1. FOR TYPICAL INTERSECTION STRIPING AND SIGNAGE DETAIL, SEE DETAIL ON THIS SHEET.
2. ALL STRIPING SHALL CONFORM TO THE LATEST EDITION OF THE "MANUAL ON UNIFORM TRAFFIC CONTROL DEVICES" (MUTCD).
3. ALL TRAFFIC PAINT SHALL BE REFLECTORIZED AND SHALL BE APPROVED BY THE ENGINEER.

SIGNAGE AND PAVEMENT MARKING PLAN – 2

SCALE: 1" = 40'

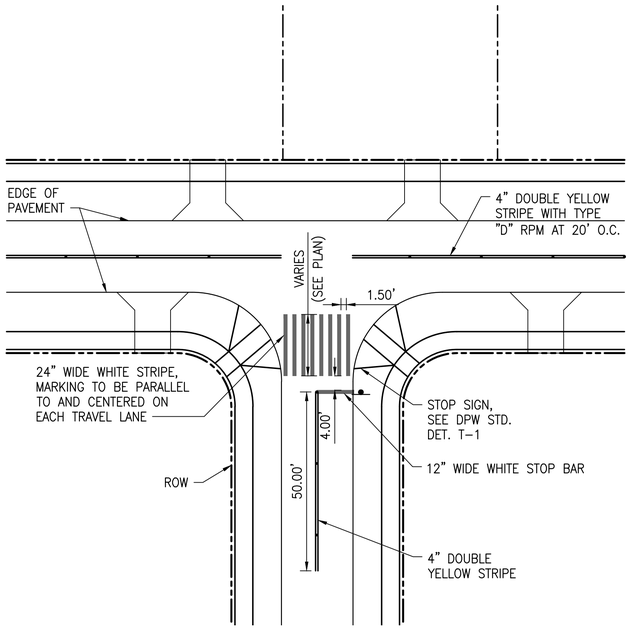

1 C-120 TYPICAL INTERSECTION STRIPING DETAIL
NOT TO SCALE

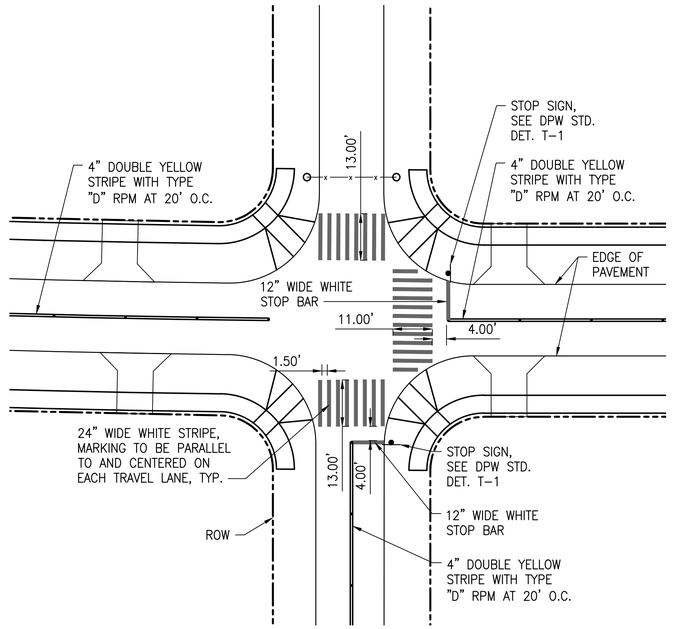

2 C-120 INSET
NOT TO SCALE

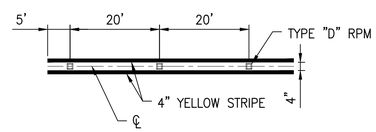

3 C-120 TYPICAL DOUBLE YELLOW STRIPE WITH TYPE "D" MARKER DETAIL
NOT TO SCALE

GRAPHIC SCALE:

40' 20' 0 40' 80'

SCALE: 1" = 40'

RICHARD Y. SANTO
LICENSED PROFESSIONAL ENGINEER
NO. 8955-C
HAWAII USA

This work was prepared by me or under my supervision for the exclusive use of SSFM International, Inc. and its clients. Any reuse, alteration, or extension of this work for any purpose other than that agreed to by the Professional Engineer, Architect, Surveyor, and Landscape Architect is prohibited.

4/30/24
Date of Signature

NOTE: Contractor to check and verify dimensions at job before proceeding with work.

SSFM International, Inc.
501 Sumner Street
Suite 620
Honolulu, Hawaii 96817

REVISION	DATE	DESCRIPTION	MADE BY	APPROVED

PROJECT:
DEPARTMENT OF HAWAIIAN HOME LANDS
SITE AND INFRASTRUCTURE IMPROVEMENTS
FOR HANAPĒPĒ RESIDENTIAL LOTS, PHASE 2
TMK: (4) 1-8-007: 003 (PORTION) & (4) 2-8-007: 001 TO 050 (PORTION)
Hanapēpē, Waimea, Kaua'i, Hawai'i

SIGNAGE AND PAVEMENT MARKING PLAN - 2

THIS DOCUMENT CONTAINS INFORMATION PROPRIETARY TO SSFM INTERNATIONAL, INC., AND IS FURNISHED IN CONFIDENCE FOR THE LIMITED PURPOSE OF EVALUATION, BIDDING OR REVIEW. THIS DOCUMENT OR ITS CONTENTS MAY NOT BE USED FOR ANY OTHER PURPOSE AND MAY NOT BE REVEALED IN WHOLE OR IN PART TO OTHERS WITHOUT THE PRIOR WRITTEN CONSENT OF SSFM INTERNATIONAL, INC.

DATE
NOVEMBER 2022

SHEET NUMBER
C-120

27 OF 109 SHEETS

PRINTED: 11/14/22

W:_CIVIL 3D PROJECTS\2018_021.001 DHHL HANAPEPE RESIDENTIAL SUBDIVISION PHASE 2\01 CE DWG\C-119 – C-120 SIGNING AND PAVEMENT MARKING PLANS.DWG 11/14/2022 3:23 PM EBORNALES

BASIN MAINTAINANCE ACCESS

HEADWALL #1
TOP= 153.00
SEE SHT C-506
FOR DETAIL

AHI ROAD DRAINLINE
FOR PLAN AND PROFILE
SEE SHT. C-205

LIMITS OF GRADING, TYP.

BOTTOM BASIN ELEV= 149'
TOP BASIN ELEV= 158'
BASIN STORAGE VOL.= 9,300 CY
FOR DETAILED BASIN GRADING,
SEE SHT. C-215

TRUE NORTH
SCALE: 1 In. = 20 Ft.

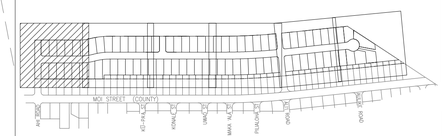

KEY PLAN
NOT TO SCALE

170.3± EG
LOT 2 GRADE ADJUSTMENT WALL, SEE NOTE 2

173.7± EG
LOT 3 GRADE ADJUSTMENT WALL, SEE NOTE 2

180.4± EG
177.2± EG
LOT 4 GRADE ADJUSTMENT WALL, SEE NOTE 2

LOT 5 GRADE ADJUSTMENT WALL, SEE NOTE 2

182.7± EG
LOT 6 GRADE ADJUSTMENT WALL, SEE NOTE 2

170.65 FG

AHI ROAD EXTENSION (DHHL OWNED-COUNTY MAINTAINED)

VMAX W300 TURF REINFORCEMENT MAT OR APPROVED EQUAL, TYP.

HEADWALL #2
TOP= 161.50
SEE SHT C-506
FOR DETAIL

HEADWALL #3
TOP= 165.00
SEE SHT C-506
FOR DETAIL

DRAINLINE C
FOR PLAN AND PROFILE
SEE SHT. C-214

GRADING BEYOND
SEE SHEET C-108

AHI ROAD (COUNTY)

4' TRANSITION TO TIE IN EXISTING

ROAD A (DHHL OWNED-COUNTY MAINTAINED)

DRAINLINE B
FOR PLAN AND PROFILE SEE SHT. C-211

DRAINLINE A
FOR PLAN AND PROFILE SEE SHT. C-201

MATCHLINE – SEE SHEET C-122

Lot	PAD ELEV	FG	ESW	BSW	FG/C
Lot 48	173.60	173.13 SW			
Lot 49	176.10	175.63 ESW, 175.62 ESW		174.83 BSW, 174.83 BSW	171.75 FG/C, 174.25 FG/C
Lot 50	178.60	178.12 ESW, 178.12 ESW		177.33 BSW, 177.33 BSW	176.69 FG/C
Lot 51	181.10	180.62 ESW, 180.62 ESW		179.83 BSW, 179.83 BSW	179.14 FG/C
Lot 52	183.60	183.12 ESW, 183.12 ESW		182.33 BSW, 182.33 BSW	181.58 FG/C
Lot 53	186.10	185.62 ESW, 185.63 ESW		184.83 BSW, 184.83 BSW	184.17 FG/C

Lot	PAD ELEV	FG	ESW	BSW	FG/C
Lot 129	173.60	173.12 SW			
Lot 128	176.10	175.63 ESW, 175.62 ESW		174.83 BSW, 174.83 BSW	171.70 FG/C, 174.12 FG/C
Lot 127	178.60	178.12 ESW, 178.12 ESW		177.33 BSW, 177.33 BSW	176.52 FG/C
Lot 126	181.10	180.62 ESW, 180.62 ESW		179.83 BSW, 179.83 BSW	178.92 FG/C
Lot 125	183.60	183.13 ESW, 183.12 ESW		182.32 BSW, 182.33 BSW	181.32 FG/C
Lot 124	186.10	185.63 ESW, 185.62 ESW		184.83 BSW, 184.82 BSW	183.66 FG/C

SWALE, TYP. ON BOTH SIDES SEE SECTION BELOW

171.35 FG/C, 173.85 FG/C, 176.29 FG/C, 178.74 FG/C, 181.18 FG/C, 183.74 FG/C
171.30 FG/C, 173.72 FG/C, 176.12 FG/C, 178.52 FG/C, 180.92 FG/C, 183.25 FG/C
171.91 FG, 176.66 FG, 177.2± EG, 179.43 FG, 180.2± EG, 182.04 FG, 182.9± EG, 182.64 FG, 185.4± EG, 184.50 FG, 187.4± EG, 188.48 FG, 189.5± EG

(4) 1-8-13: 50
(4) 1-8-13: 51
(4) 1-8-13: 52
(4) 1-8-13: 53
(4) 1-8-13: 54
(4) 1-8-13: 57

LEGEND:

- ASPHALTIC CONCRETE PAVEMENT
- CONCRETE PAVEMENT
- GRASS
- PROPERTY LINE
- LOT LINE
- LIMITS OF GRADING
- GRATED DRAIN INLET (GDI)
- STORM DRAIN MANHOLE (SDMH)
- SEWER MANHOLE (SMH)
- FIRE HYDRANT
- 100.00 TW — TOP OF WALL ELEVATION
- 100.00 FG — FINISH GRADE ELEVATION
- 100.00 BSW — BEGIN SWALE (DAYLIGHT TO FG)
- 100.00 ESW — END SWALE
- 100.00 C — CONCRETE ELEVATION
- SURFACE RUNOFF FLOW DIRECTION
- HOUSE AND CAR PORT PAD (APPROXIMATE)
- GRADE ADJUSTMENT WALL SEE DETAIL 3/C-502

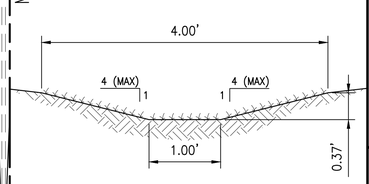

1/C-121 SWALE SECTION
NOT TO SCALE

NOTES:
1. FOR TYPICAL LOT GRADING SECTION, SEE 2/C-126
2. FOR GRADE ADJUSTMENT WALL PLAN, SEE SHEET C-127

GRAPHIC SCALE:
20' 10' 0 20' 40'
SCALE: 1" = 20'

GRADING PLAN – 1
SCALE: 1" = 20'

RICHARD Y. SANTO
LICENSED PROFESSIONAL ENGINEER
NO. 8955-C
HAWAII USA

This work was prepared by me or under my supervision and I am responsible for its contents. Errors, omissions or misinterpretations due to the preparer's failure to perform services, and unauthorized alterations, are the responsibility of the author.

4/30/24
Date of Signature

NOTE: Contractor to check and verify dimensions at job before proceeding with work.

SSFM International, Inc.
501 Sumner Street
Suite 620
Honolulu, Hawaii 96817

REVISION	DATE	DESCRIPTION	MADE BY	APPROVED

PROJECT:
DEPARTMENT OF HAWAIIAN HOME LANDS
SITE AND INFRASTRUCTURE IMPROVEMENTS
FOR HANAPĒPĒ RESIDENTIAL LOTS, PHASE 2
TMK: (4) 1-8-007: 003 (PORTION) & (4) 2-8-007: 001 TO 050 (PORTION)
Hanapēpē, Waimea, Kaua'i, Hawai'i

GRADING AND DRAINAGE PLAN - 1

THIS DOCUMENT CONTAINS INFORMATION PROPRIETARY TO SSFM INTERNATIONAL, INC., AND IS FURNISHED IN CONFIDENCE FOR THE LIMITED PURPOSE OF EVALUATION, BIDDING OR REVIEW. THIS DOCUMENT OR ITS CONTENTS MAY NOT BE USED FOR ANY OTHER PURPOSE AND MAY NOT BE DISCLOSED OR APPEAR TO OTHERS WITHOUT THE PRIOR WRITTEN CONSENT OF SSFM INTERNATIONAL, INC.

DATE
NOVEMBER 2022

SHEET NUMBER
C-121

28 OF 109 SHEETS

W:_CIVIL 3D PROJECTS\2018_027\001 DHHL HANAPEPE RESIDENTIAL SUBDIVISION PHASE 2\01 CE DWGS\C-121 - C-126 GRADING AND DRAINAGE PLANS.DWG 11/07/2022 2:38 PM EBORNALES

PRINTED: 11/10/22

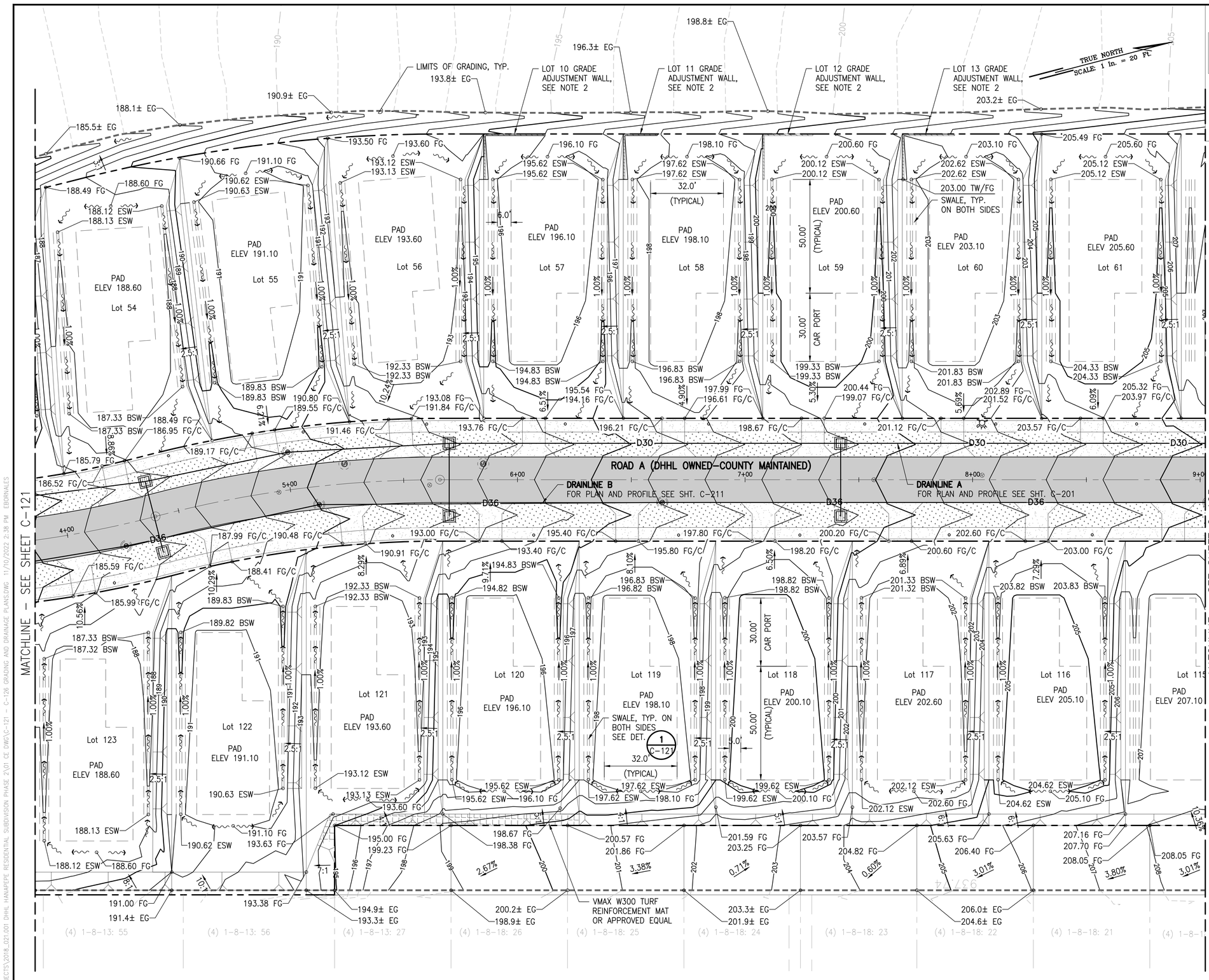

GRADING PLAN – 2

SCALE: 1" = 20'

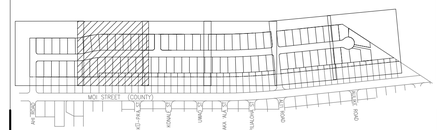

KEY PLAN

NOT TO SCALE

LEGEND:

- ASPHALTIC CONCRETE PAVEMENT
- CONCRETE PAVEMENT
- GRASS
- PROPERTY LINE
- LOT LINE
- LIMITS OF GRADING
- GRATED DRAIN INLET (GDI)
- STORM DRAIN MANHOLE (SDMH)
- SEWER MANHOLE (SMH)
- FIRE HYDRANT
- 100.00 TW — TOP OF WALL ELEVATION
- 100.00 FG — FINISH GRADE ELEVATION
- 100.00 BSW — BEGIN SWALE (DAYLIGHT TO FG)
- 100.00 ESW — END SWALE
- 100.00 C — CONCRETE ELEVATION
- SURFACE RUNOFF FLOW DIRECTION
- HOUSE AND CAR PORT PAD (APPROXIMATE)
- GRADE ADJUSTMENT WALL SEE DETAIL 3 / C-502

NOTES:

1. FOR TYPICAL LOT GRADING SECTION, SEE 2 / C-126
2. FOR GRADE ADJUSTMENT WALL PLAN, SEE SHEET C-127

GRAPHIC SCALE:

20' 10' 0 20' 40'

SCALE: 1" = 20'

RICHARD Y. SANTO
LICENSED PROFESSIONAL ENGINEER
NO. 8955-C
HAWAII USA

This work was prepared by me or under my supervision and is not to be used in whole or in part for any purpose other than that specified by the author. (Sections 16-115-3, Rules of Professional Engineers Architects, Surveyors, and Landscape Architects) 4/30/24 Date of Signature

NOTE: Contractor to check and verify dimensions at job before proceeding with work.

SSFM International, Inc.
501 Sumner Street
Suite 620
Honolulu, Hawaii 96817

REVISION	DATE	DESCRIPTION	MADE BY	APPROVED

PROJECT:
DEPARTMENT OF HAWAIIAN HOME LANDS
SITE AND INFRASTRUCTURE IMPROVEMENTS
FOR HANAPĒPĒ RESIDENTIAL LOTS, PHASE 2
TMK: (4) 1-8-007: 003 (PORTION) & (4) 2-8-007: 001 TO 050 (PORTION)
Hanapēpē, Waimea, Kaua'i, Hawai'i

GRADING AND DRAINAGE PLAN - 2

THIS DOCUMENT CONTAINS INFORMATION PROPRIETARY TO SSFM INTERNATIONAL, INC. AND IS FURNISHED IN CONFIDENCE FOR THE LIMITED PURPOSE OF EVALUATION, BIDDING OR REVIEW. THIS DOCUMENT OR ITS CONTENTS MAY NOT BE USED FOR ANY OTHER PURPOSE AND MAY NOT BE REPRODUCED OR ADAPTED TO OTHERS WITHOUT THE PRIOR WRITTEN CONSENT OF SSFM INTERNATIONAL, INC.

DATE
NOVEMBER 2022

SHEET NUMBER
C-122
29 OF 109 SHEETS

W:_CIVIL 3D PROJECTS\2018_021001 DHHL HANAPEPE RESIDENTIAL SUBDIVISION PHASE 2\01 CE DWG\C-121 - C-126 GRADING AND DRAINAGE PLANS.DWG 11/10/2022 2:38 PM EBORNALES

PRINTED: 11/10/22

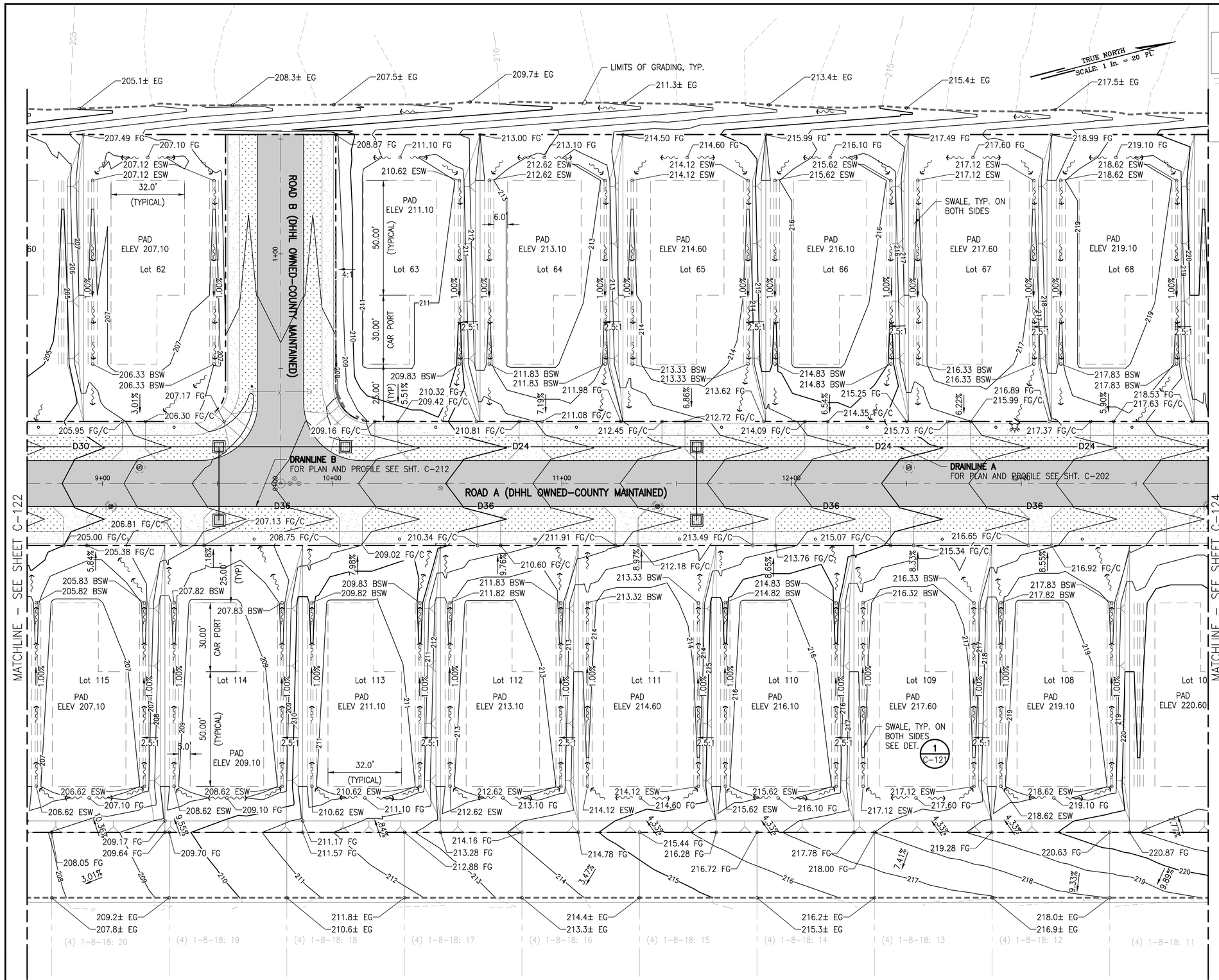

GRADING PLAN – 3

SCALE: 1" = 20'

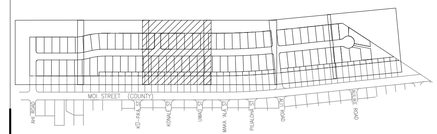

KEY PLAN

NOT TO SCALE

LEGEND:

- ASPHALTIC CONCRETE PAVEMENT
- CONCRETE PAVEMENT
- GRASS
- PROPERTY LINE
- LOT LINE
- LIMITS OF GRADING
- GRATED DRAIN INLET (GDI)
- STORM DRAIN MANHOLE (SDMH)
- SEWER MANHOLE (SMH)
- FIRE HYDRANT
- 100.00 TW — TOP OF WALL ELEVATION
- 100.00 FG — FINISH GRADE ELEVATION
- 100.00 BSW — BEGIN SWALE (DAYLIGHT TO FG)
- 100.00 ESW — END SWALE
- 100.00 C — CONCRETE ELEVATION
- SURFACE RUNOFF FLOW DIRECTION
- HOUSE AND CAR PORT PAD (APPROXIMATE)

NOTE:

1. FOR TYPICAL LOT GRADING SECTION, SEE 2 / C-126

GRAPHIC SCALE:

20' 10' 0 20' 40'

SCALE: 1" = 20'

RICHARD Y. SANTO
LICENSED PROFESSIONAL ENGINEER
NO. 8955-C
HAWAII USA

This work was prepared by me or under my supervision. Any use of this work for any other purpose, or by any other person, without my professional review, adaptation, correction, and approval is prohibited.

4/30/24
Date of Signature

NOTE: Contractor to check and verify dimensions at job before proceeding with work.

SSFM International, Inc.
501 Sumner Street
Suite 620
Honolulu, Hawaii 96817

REVISION	DATE	DESCRIPTION	MADE BY	APPROVED

PROJECT:
DEPARTMENT OF HAWAIIAN HOME LANDS
SITE AND INFRASTRUCTURE IMPROVEMENTS
FOR HANAPĒPĒ RESIDENTIAL LOTS, PHASE 2
TMK: (4) 1-8-007: 003 (PORTION) & (4) 2-8-007: 001 TO 050 (PORTION)
Hanapēpē, Waimea, Kaua'i, Hawai'i

GRADING AND DRAINAGE PLAN - 3

THIS DOCUMENT CONTAINS INFORMATION PROPRIETARY TO SSFM INTERNATIONAL, INC., AND IS FURNISHED IN CONFIDENCE FOR THE LIMITED PURPOSE OF EVALUATION, BIDDING OR REVIEW. THIS DOCUMENT OR ITS CONTENTS MAY NOT BE USED FOR ANY OTHER PURPOSE AND MAY NOT BE REPRODUCED OR DISCLOSED TO OTHERS WITHOUT THE PRIOR WRITTEN CONSENT OF SSFM INTERNATIONAL, INC.

DATE
NOVEMBER 2022

SHEET NUMBER
C-123

30 OF 109 SHEETS

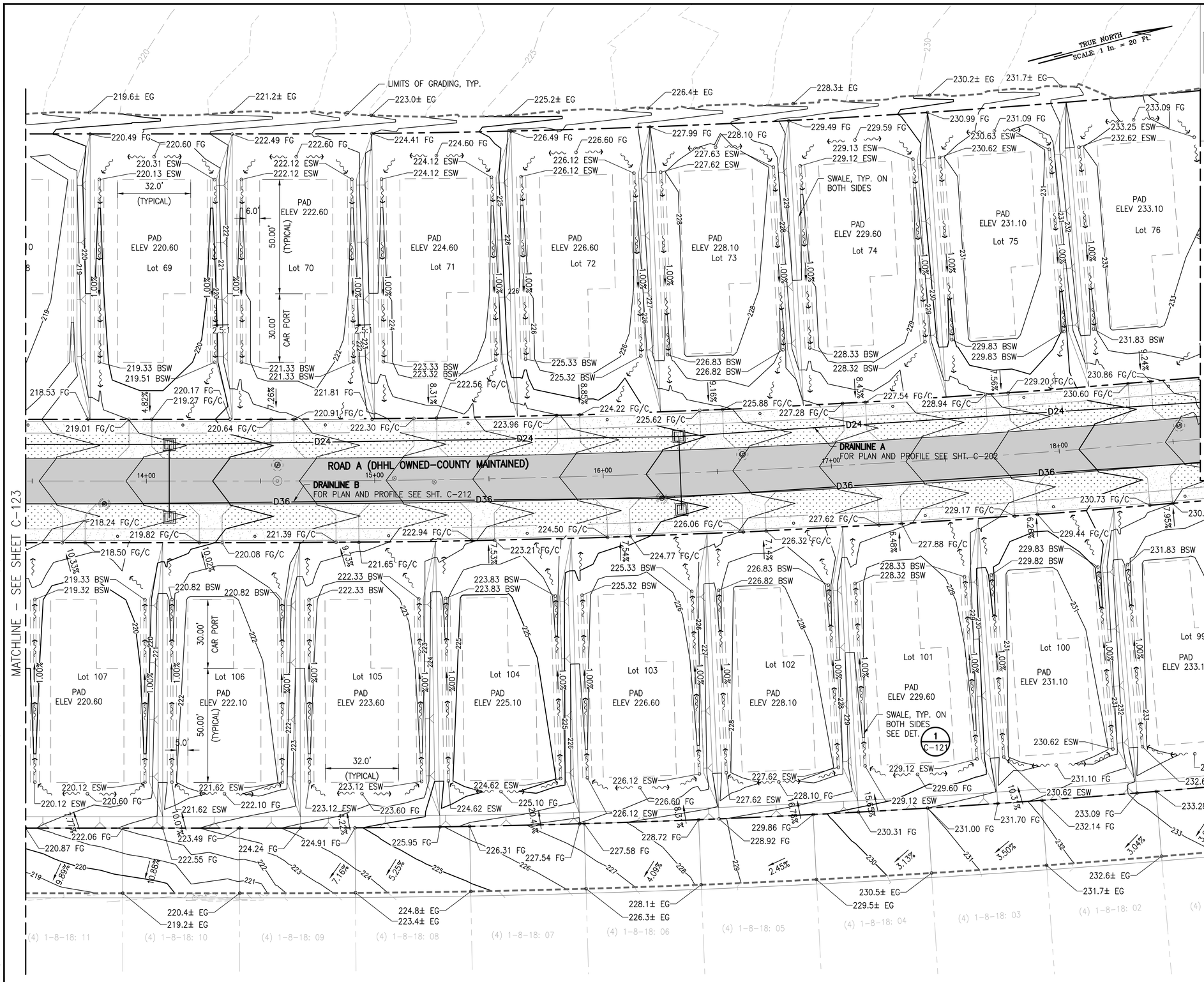

GRADING PLAN – 4

SCALE: 1" = 20'

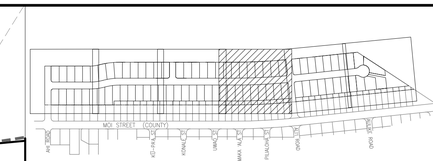

KEY PLAN

NOT TO SCALE

LEGEND:

- ASPHALTIC CONCRETE PAVEMENT
- CONCRETE PAVEMENT
- GRASS
- PROPERTY LINE
- LOT LINE
- LIMITS OF GRADING
- GRATED DRAIN INLET (GDI)
- STORM DRAIN MANHOLE (SDMH)
- SEWER MANHOLE (SMH)
- FIRE HYDRANT
- 100.00 TW — TOP OF WALL ELEVATION
- 100.00 FG — FINISH GRADE ELEVATION
- 100.00 BSW — BEGIN SWALE (DAYLIGHT TO FG)
- 100.00 ESW — END SWALE
- 100.00 C — CONCRETE ELEVATION
- SURFACE RUNOFF FLOW DIRECTION
- HOUSE AND CAR PORT PAD (APPROXIMATE)

NOTE:

1. FOR TYPICAL LOT GRADING SECTION, SEE 2 C-126

GRAPHIC SCALE:

20' 10' 0 20' 40'

SCALE: 1" = 20'

RICHARD Y. SANTO
LICENSED PROFESSIONAL ENGINEER
NO. 8955-C
HAWAII USA

This work was prepared by me or under my supervision and contribution of this project will be under my direction. (Discretion of construction or Engineer in Charge of Site Supervisor Definition of the Hawaii Architecture Rules, Professional Engineers, Architects, Surveyors, and Landscape Architects)

Signature 4/30/24 expiration date of the license

NOTE: Contractor to check and verify dimensions at job before proceeding with work.

SSFM International
SSFM International, Inc.
501 Sumner Street
Suite 620
Honolulu, Hawaii 96817

REVISION	DATE	DESCRIPTION	MADE BY	APPROVED

PROJECT:
DEPARTMENT OF HAWAIIAN HOME LANDS
SITE AND INFRASTRUCTURE IMPROVEMENTS
FOR HANAPĒPĒ RESIDENTIAL LOTS, PHASE 2
TMK: (4) 1-8-007: 003 (PORTION) & (4) 2-8-007: 001 TO 050 (PORTION)
Hanapēpē, Waimea, Kaua'i, Hawai'i

GRADING AND DRAINAGE PLAN - 4

THIS DOCUMENT CONTAINS INFORMATION PROPRIETARY TO SSFM INTERNATIONAL, INC., AND IS FURNISHED IN CONFIDENCE FOR THE LIMITED PURPOSE OF EVALUATION, BIDDING OR REVIEW. THIS DOCUMENT OR ITS CONTENTS MAY NOT BE USED FOR ANY OTHER PURPOSE AND MAY NOT BE REPRODUCED OR DISCLOSED TO OTHERS WITHOUT THE PRIOR WRITTEN CONSENT OF SSFM INTERNATIONAL, INC.

DATE
NOVEMBER 2022

SHEET NUMBER
C-124

PRINTED: 11/10/22

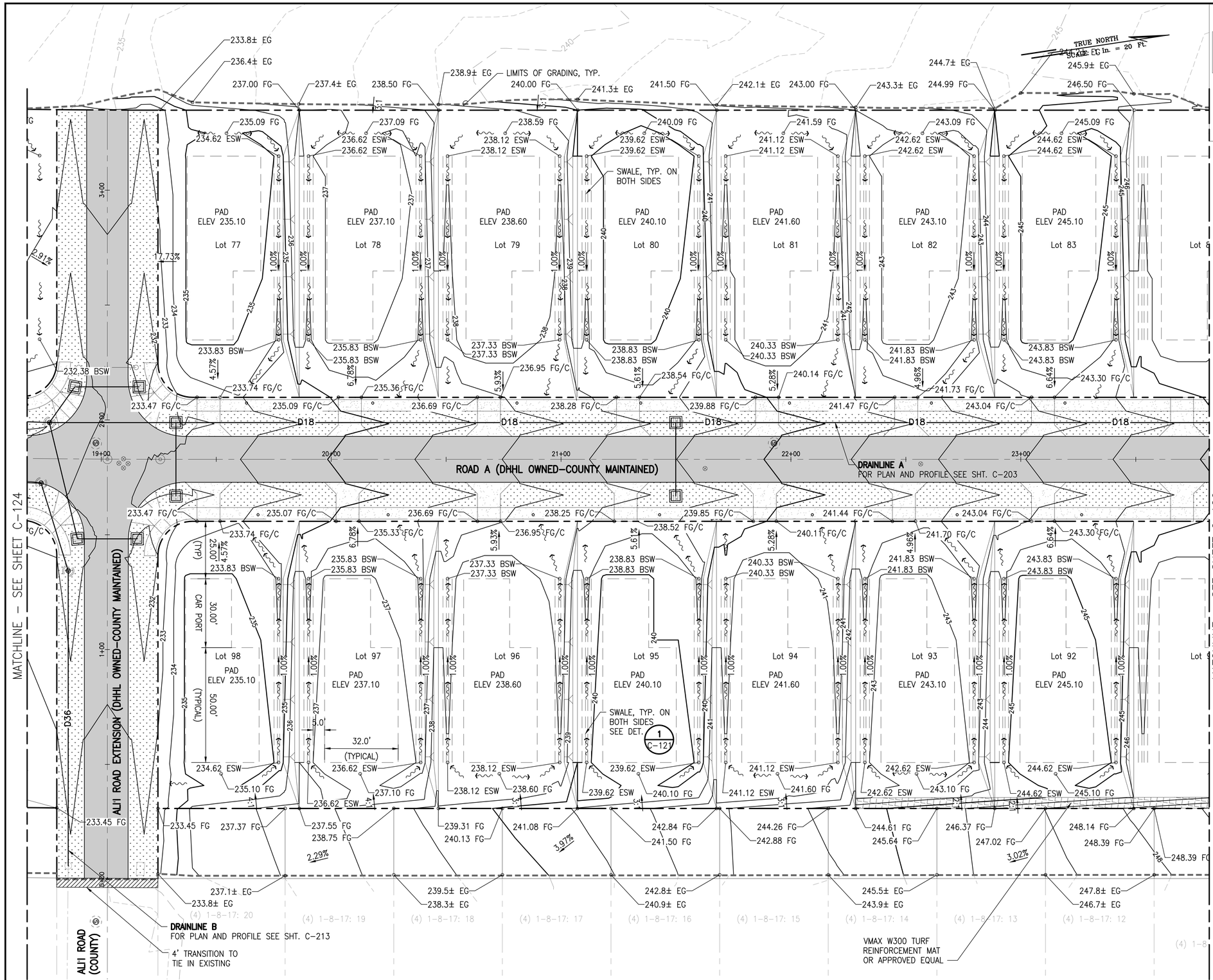

GRADING PLAN – 5

SCALE: 1" = 20'

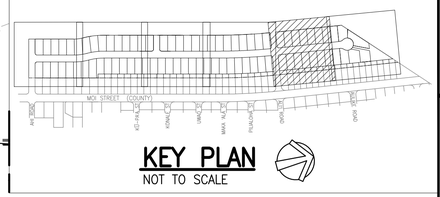

KEY PLAN

NOT TO SCALE

LEGEND:

- ASPHALTIC CONCRETE PAVEMENT
- CONCRETE PAVEMENT
- GRASS
- PROPERTY LINE
- LOT LINE
- LIMITS OF GRADING
- GRATED DRAIN INLET (GDI)
- STORM DRAIN MANHOLE (SDMH)
- SEWER MANHOLE (SMH)
- FIRE HYDRANT
- 100.00 TW — TOP OF WALL ELEVATION
- 100.00 FG — FINISH GRADE ELEVATION
- 100.00 BSW — BEGIN SWALE (DAYLIGHT TO FG)
- 100.00 ESW — END SWALE
- 100.00 C — CONCRETE ELEVATION
- SURFACE RUNOFF FLOW DIRECTION
- HOUSE AND CAR PORT PAD (APPROXIMATE)

NOTE:

1. FOR TYPICAL LOT GRADING SECTION, SEE 2 C-126

GRAPHIC SCALE:

20' 10' 0 20' 40'

SCALE: 1" = 20'

RICHARD Y. SANTO
LICENSED PROFESSIONAL ENGINEER
NO. 8955-C
HAWAII USA

This work was prepared by me or under my supervision and I am responsible for its contents. (Sections, titles, or descriptions of responsibility as defined in the Professional Engineers, Architects, Surveyors, and Landscape Architects)

4/30/24
Date of Signature

NOTE: Contractor to check and verify dimensions at job before proceeding with work.

SSFM International
SSFM International, Inc.
501 Sumner Street
Suite 620
Honolulu, Hawaii 96817

REVISION	DATE	DESCRIPTION	MADE BY	APPROVED

PROJECT:
DEPARTMENT OF HAWAIIAN HOME LANDS
SITE AND INFRASTRUCTURE IMPROVEMENTS
FOR HANAPĒPĒ RESIDENTIAL LOTS, PHASE 2
TMK: (4) 1-8-007: 003 (PORTION) & (4) 2-8-007: 001 TO 050 (PORTION)
Hanapēpē, Waimea, Kaua'i, Hawai'i

GRADING AND DRAINAGE PLAN - 5

THIS DOCUMENT CONTAINS INFORMATION PROPRIETARY TO SSFM INTERNATIONAL, INC., AND IS FURNISHED IN CONFIDENCE FOR THE LIMITED PURPOSE OF EVALUATION, BIDDING OR REVIEW. THIS DOCUMENT OR ITS CONTENTS MAY NOT BE USED FOR ANY OTHER PURPOSE AND MAY NOT BE REPRODUCED OR DISCLOSED TO OTHERS WITHOUT THE PRIOR WRITTEN CONSENT OF SSFM INTERNATIONAL, INC.

DATE
NOVEMBER 2022

SHEET NUMBER
C-125

W:_CIVIL 3D PROJECTS\2018_021.001 DHHL HANAPEPE RESIDENTIAL SUBDIVISION PHASE 2\01 CE DWG\C-121 - C-126 GRADING AND DRAINAGE PLANS.DWG 11/10/2022 2:00 PM EBORNALES

PRINTED: 11/10/22

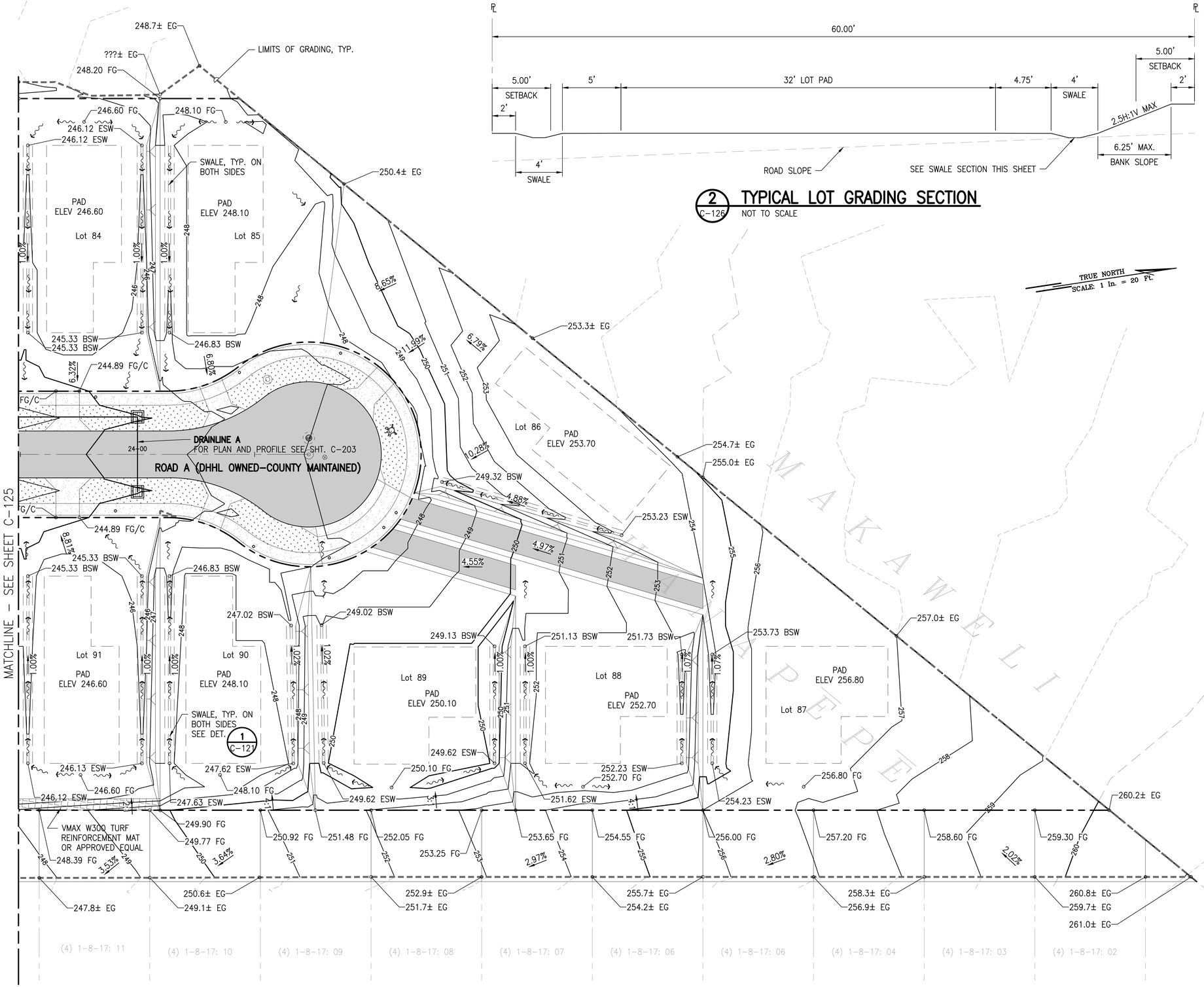

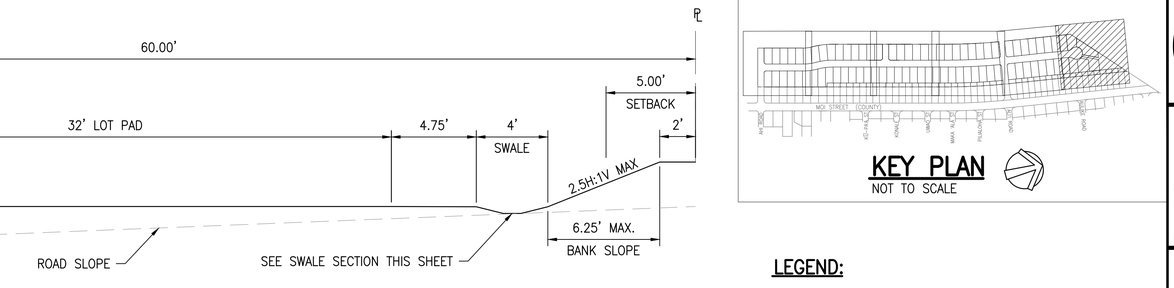

2 TYPICAL LOT GRADING SECTION
C-126 NOT TO SCALE

KEY PLAN
NOT TO SCALE

LEGEND:

- ASPHALTIC CONCRETE PAVEMENT
- CONCRETE PAVEMENT
- GRASS
- PROPERTY LINE
- LOT LINE
- LIMITS OF GRADING
- GRATED DRAIN INLET (GDI)
- STORM DRAIN MANHOLE (SDMH)
- SEWER MANHOLE (SMH)
- FIRE HYDRANT
- 100.00 TW — TOP OF WALL ELEVATION
- 100.00 FG — FINISH GRADE ELEVATION
- 100.00 BSW — BEGIN SWALE (DAYLIGHT TO FG)
- 100.00 ESW — END SWALE
- 100.00 C — CONCRETE ELEVATION
- SURFACE RUNOFF FLOW DIRECTION
- HOUSE AND CAR PORT PAD (APPROXIMATE)

GRAPHIC SCALE:
20' 10' 0 20' 40'
SCALE: 1" = 20'

GRADING PLAN – 6
SCALE: 1" = 20'

RICHARD Y. SANTO
LICENSED PROFESSIONAL ENGINEER
NO. 8955-C
HAWAII, USA

This work was prepared by me or under my supervision and I am responsible for its accuracy. The signature and seal shall be in accordance with the Hawaii Administrative Rules, Chapter 16-115, Professional Engineers, Architects, Surveyors, and Landscape Architects. 4/30/24 Date of Signature

NOTE: Contractor to check and verify dimensions at job before proceeding with work.

SSFM International, Inc.
501 Sumner Street
Suite 620
Honolulu, Hawaii 96817

REVISION	DATE	DESCRIPTION	MADE BY	APPROVED

PROJECT:
DEPARTMENT OF HAWAIIAN HOME LANDS
SITE AND INFRASTRUCTURE IMPROVEMENTS
FOR HANAPĒPĒ RESIDENTIAL LOTS, PHASE 2
TMK: (4) 1-8-007: 003 (PORTION) & (4) 2-8-007: 001 TO 050 (PORTION)
Hanapēpē, Waimea, Kaua'i, Hawai'i

GRADING AND DRAINAGE PLAN - 6

THIS DOCUMENT CONTAINS INFORMATION PROPRIETARY TO SSFM INTERNATIONAL, INC., AND IS FURNISHED IN CONFIDENCE FOR THE LIMITED PURPOSE OF EVALUATION, BIDDING OR REVIEW. THIS DOCUMENT OR ITS CONTENTS MAY NOT BE USED FOR MANUFACTURE OR CONSTRUCTION BY OR DISCLOSED OR FURNISHED TO OTHERS WITHOUT THE PRIOR WRITTEN CONSENT OF SSFM INTERNATIONAL, INC.

DATE
NOVEMBER 2022

SHEET NUMBER
C-126

33 OF 109 SHEETS

W:_CIVIL 3D PROJECTS\2018_021.001 DHHL HANAPEPE RESIDENTIAL SUBDIVISION PHASE 2\01 CE DWG\C-121 - C-126 GRADING AND DRAINAGE PLANS.DWG 11/10/2022 2:00 PM EBORNALES

PRINTED: 11/10/22

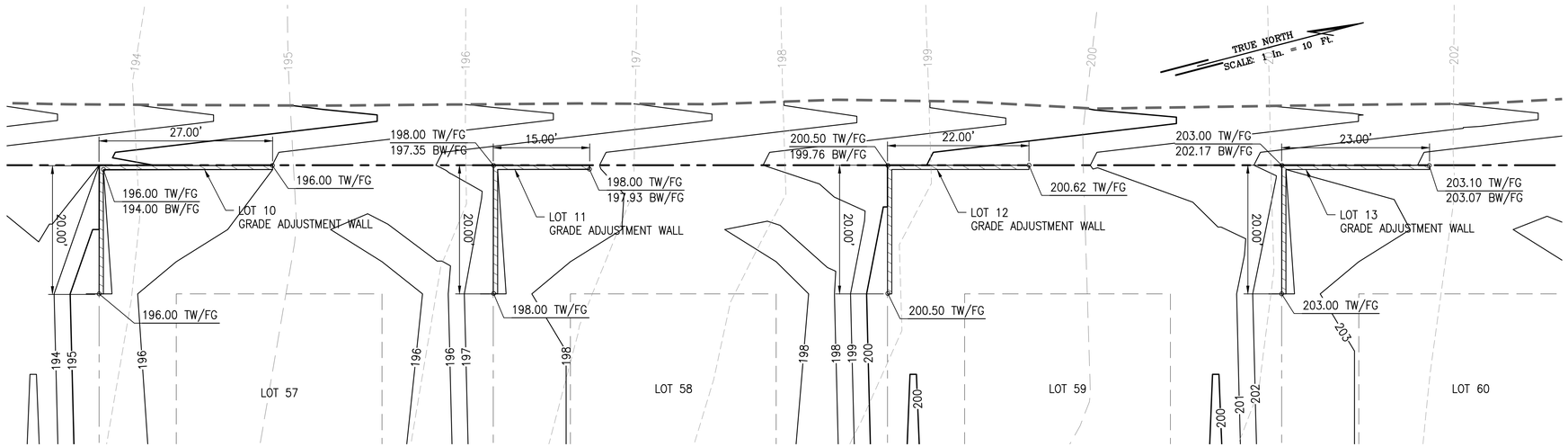

GRADE ADJUSTMENT WALL PLAN

SCALE: 1" = 10'

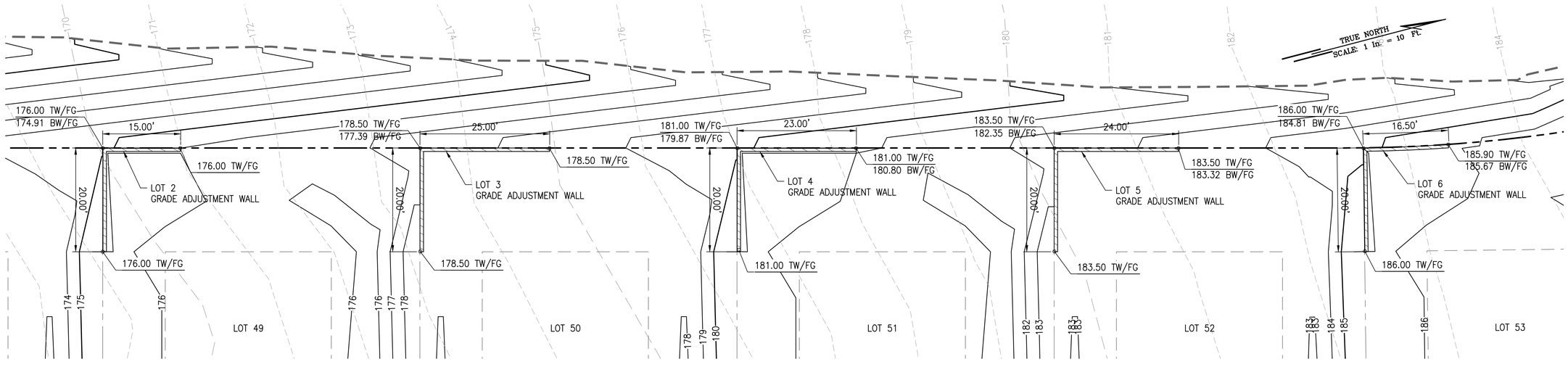

GRADE ADJUSTMENT WALL PLAN

SCALE: 1" = 10'

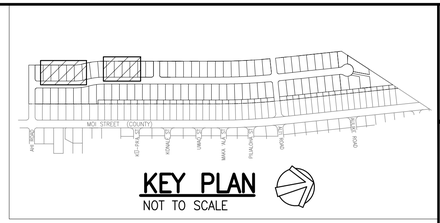

KEY PLAN

NOT TO SCALE

LEGEND:

- PROPERTY LINE
- LIMITS OF GRADING AND DISTURBANCE
- GRADE ADJUSTMENT WALL, SEE DETAIL 3 / C-502

NOTE:

FOR GRADE WALL ADJUSTMENT ELEVATION DETAIL, SEE SHEETS C-121 TO C-126.

GRAPHIC SCALE:

10' 5' 0 10' 20'

SCALE: 1" = 10'

RICHARD Y. SANTO
LICENSED PROFESSIONAL ENGINEER
NO. 8955-C
HAWAII USA

This work was prepared by me or under my supervision for the exclusive use of SSFM International, Inc. and its clients. Unauthorized use of this work product for any purpose is prohibited and SSFM International, Inc. (Corporation) shall not be liable for any damages resulting from unauthorized use of this work product. Professional Engineers, Architects, Surveyors, and Landscape Architects shall affix their seal, signature and date to the documents prepared by them.

4/30/24
Date of Expiration of the License

NOTE: Contractor to check and verify dimensions at job before proceeding with work.

SSFM International, Inc.
501 Sumner Street
Suite 620
Honolulu, Hawaii 96817

REVISION	DATE	DESCRIPTION	MADE BY	APPROVED

PROJECT:
DEPARTMENT OF HAWAIIAN HOME LANDS
SITE AND INFRASTRUCTURE IMPROVEMENTS
FOR HANAPĒPĒ RESIDENTIAL LOTS, PHASE 2
TMK: (4) 1-8-007: 003 (PORTION) & (4) 2-8-007: 001 TO 050 (PORTION)
Hanapēpē, Waimea, Kaua'i, Hawai'i

GRADE ADJUSTMENT WALL PLAN

THIS DOCUMENT CONTAINS INFORMATION PROPRIETARY TO SSFM INTERNATIONAL, INC., AND IS FURNISHED IN CONFIDENCE FOR THE LIMITED PURPOSE OF EVALUATION, BIDDING OR REVIEW. THIS DOCUMENT OR ITS CONTENTS MAY NOT BE USED FOR ANY OTHER PURPOSE AND MAY NOT BE REPRODUCED OR DISCLOSED TO OTHERS WITHOUT THE PRIOR WRITTEN CONSENT OF SSFM INTERNATIONAL, INC.

DATE
NOVEMBER 2022

SHEET NUMBER
C-127
34 OF 109 SHEETS

W:_CIVIL 3D PROJECTS\2018_021.001 DHHL HANAPEPE RESIDENTIAL SUBDIVISION PHASE 2\01 CE DWG\C-127 GRADE ADJUSTMENT WALL PLAN.DWG 11/8/2022 5:07 PM EBORNALES

PRINTED: 11/8/22

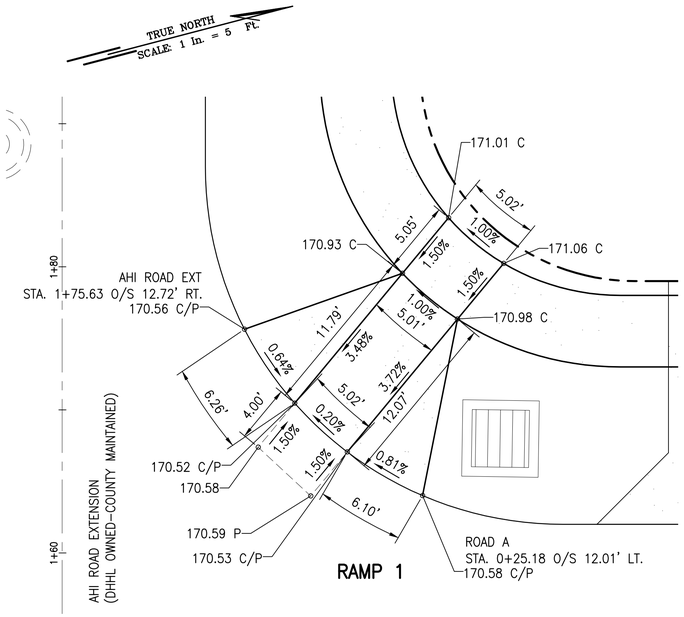

RAMP 1

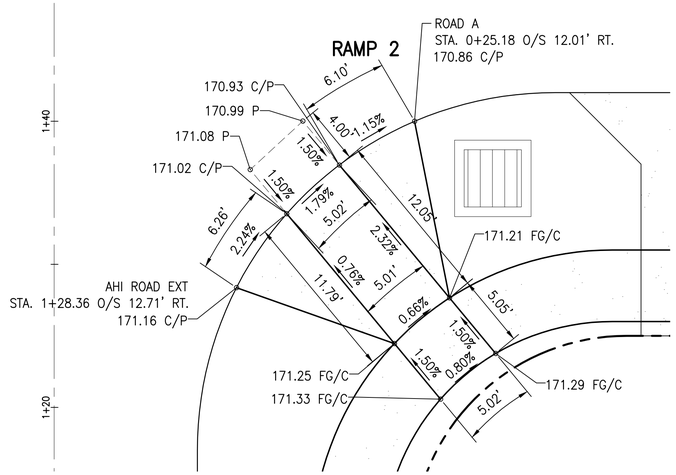

RAMP GRADING DETAILS – ROAD A AND AHI ROAD INTERSECTION

SCALE: 1" = 5'

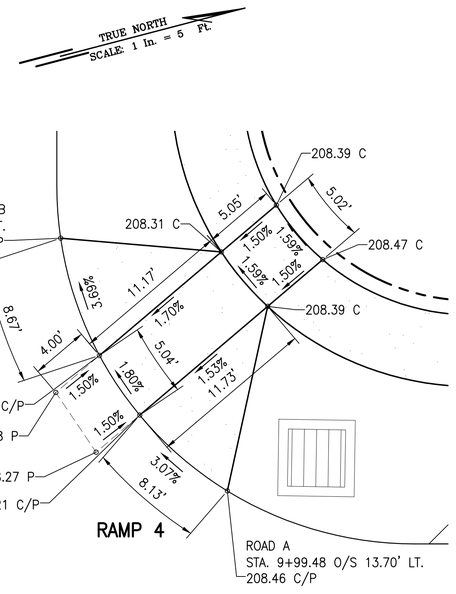

RAMP GRADING DETAILS – ROAD A AND ROAD B INTERSECTION

SCALE: 1" = 5'

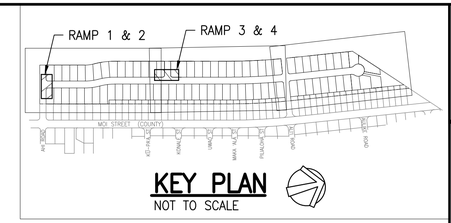

KEY PLAN
NOT TO SCALE

LEGEND:

PROPERTY LINE

LOT LINE

GRAPHIC SCALE:

5' 0 5' 10'

SCALE: 1" = 5'

RICHARD Y. SANTO
LICENSED PROFESSIONAL ENGINEER
NO. 8955-C
HAWAII USA

This work was prepared by me or under my supervision and is the property of SSFM International, Inc. Reuse of this document without the prior written consent of SSFM International, Inc. is prohibited. (Section 16-115-22, Hawaii Administrative Rules, Rules Regulating the Licensing of Professional Engineers, Architects, Surveyors, and Landscape Architects)

4/30/24
Date of Signature

NOTE: Contractor to check and verify dimensions at job before proceeding with work.

SSFM International
SSFM International, Inc.
501 Sumner Street
Suite 620
Honolulu, Hawaii 96817

REVISION	DATE	DESCRIPTION	MADE BY	APPROVED

PROJECT:
DEPARTMENT OF HAWAIIAN HOME LANDS
SITE AND INFRASTRUCTURE IMPROVEMENTS
FOR HANAPĒPĒ RESIDENTIAL LOTS, PHASE 2
TMK: (4) 1-8-007: 003 (PORTION) & (4) 2-8-007: 001 TO 050 (PORTION)
Hanapēpē, Waimea, Kaua'i, Hawai'i

RAMP DETAILED GRADING PLAN - 1

THIS DOCUMENT CONTAINS INFORMATION PROPRIETARY TO SSFM INTERNATIONAL, INC., AND IS FURNISHED IN CONFIDENCE FOR THE LIMITED PURPOSE OF EVALUATION, BIDDING OR REVIEW. THIS DOCUMENT OR ITS CONTENTS MAY NOT BE USED FOR ANY OTHER PURPOSE AND MAY NOT BE REPRODUCED OR DISCLOSED TO OTHERS WITHOUT THE PRIOR WRITTEN CONSENT OF SSFM INTERNATIONAL, INC.

DATE
NOVEMBER 2022

SHEET NUMBER
C-128
35 OF 109 SHEETS

W:_CIVIL 3D PROJECTS\2018_021.001 DHHL HANAPEPE RESIDENTIAL SUBDIVISION PHASE 2\01 CE DWGS\C-128 RAMP DETAILED GRADING PLAN - 1.DWG 11/14/2022 11:29 AM BBROWN

PRINTED: 11/14/22

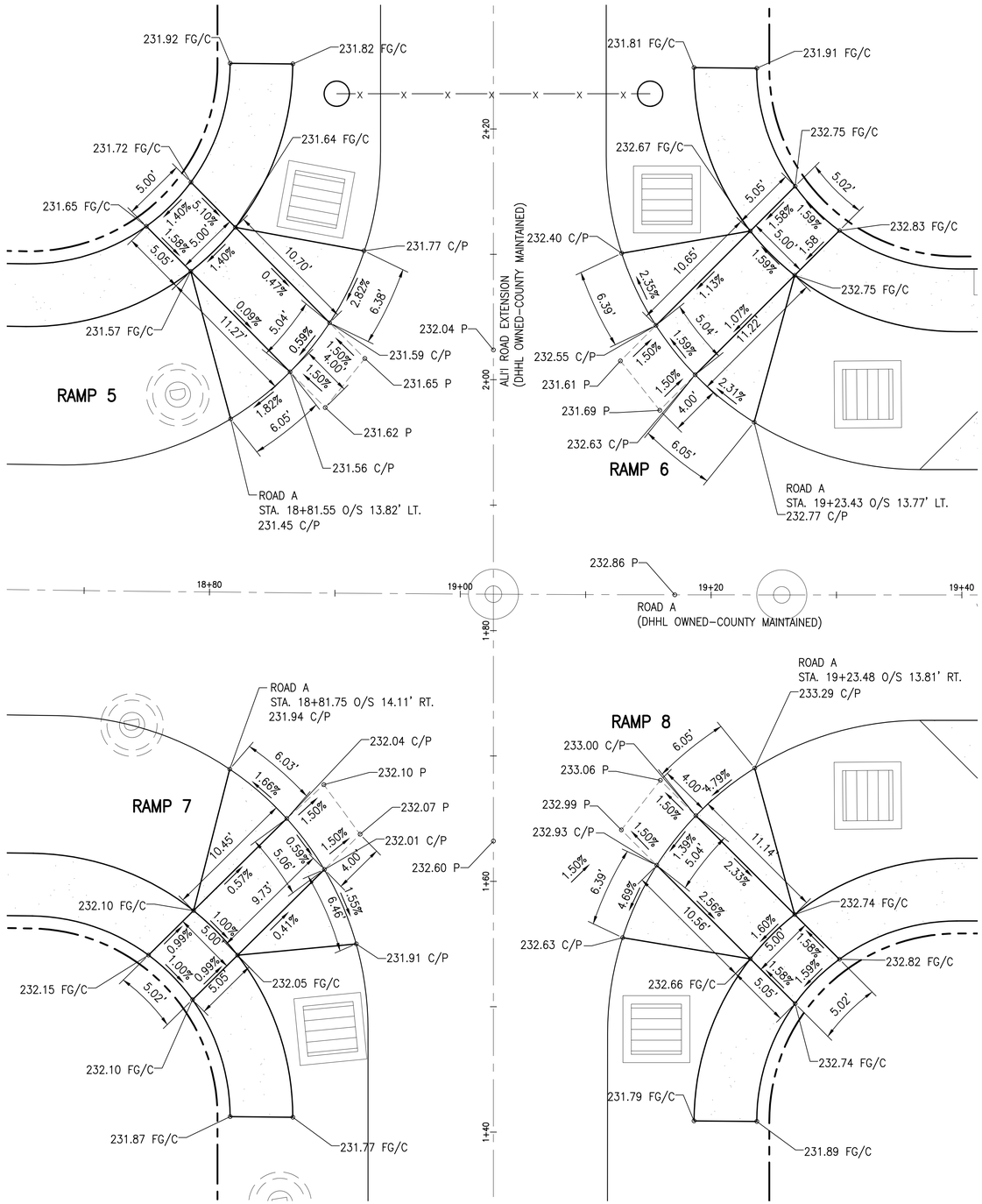

RAMP GRADING DETAILS – ROAD A AND ALI'I ROAD INTERSECTION

SCALE: 1" = 5'

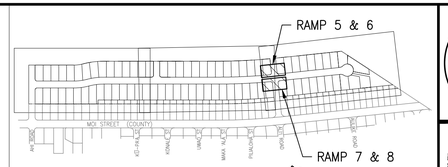

KEY PLAN

NOT TO SCALE

LEGEND:

PROPERTY LINE

LOT LINE

TRUE NORTH
SCALE: 1 In. = 5 Ft.

GRAPHIC SCALE:

5' 0 5' 10'

SCALE: 1" = 5'

RICHARD Y. SANTO
LICENSED PROFESSIONAL ENGINEER
NO. 8955-C
HAWAII USA

This work was prepared by me or under my supervision and construction on this project will be under my observation. (Observation of construction as defined in Chapter 16-115, Subchapter 2 Definitions of the Hawaii Administrative Rules, Professional Engineers, Architects, Surveyors, and Landscape Architects)

Signature 4/30/24 expiration date of the license

NOTE: Contractor to check and verify dimensions at job before proceeding with work.

SSFM International
SSFM International, Inc.
501 Sumner Street
Suite 620
Honolulu, Hawaii 96817

REVISION	DATE	DESCRIPTION	MADE BY	APPROVED

PROJECT:
DEPARTMENT OF HAWAIIAN HOME LANDS
SITE AND INFRASTRUCTURE IMPROVEMENTS
FOR HANAPĒPĒ RESIDENTIAL LOTS, PHASE 2
TMK: (4) 1-8-007: 003 (PORTION) & (4) 2-8-007: 001 TO 050 (PORTION)
Hanapēpē, Waimea, Kaua'i, Hawai'i

RAMP DETAILED GRADING PLAN - 2

THIS DOCUMENT CONTAINS INFORMATION PROPRIETARY TO SSFM INTERNATIONAL, INC., AND IS FURNISHED IN CONFIDENCE FOR THE LIMITED PURPOSE OF EVALUATION, BIDDING OR REVIEW. THIS DOCUMENT OR ITS CONTENTS MAY NOT BE USED FOR ANY OTHER PURPOSE AND MAY NOT BE REPRODUCED OR DISCLOSED TO OTHERS WITHOUT THE PRIOR WRITTEN CONSENT OF SSFM INTERNATIONAL, INC.

DATE
NOVEMBER 2022

SHEET NUMBER
C-129

36 OF 109 SHEETS

W:_CIVIL 3D PROJECTS\2018_021.001 DHHL HANAPEPE RESIDENTIAL SUBDIVISION PHASE 2\01 CE DWG\C-129 RAMP DETAILED GRADING PLAN - 2.DWG 11/14/2022 11:09 AM BBROWN

PRINTED: 11/14/22

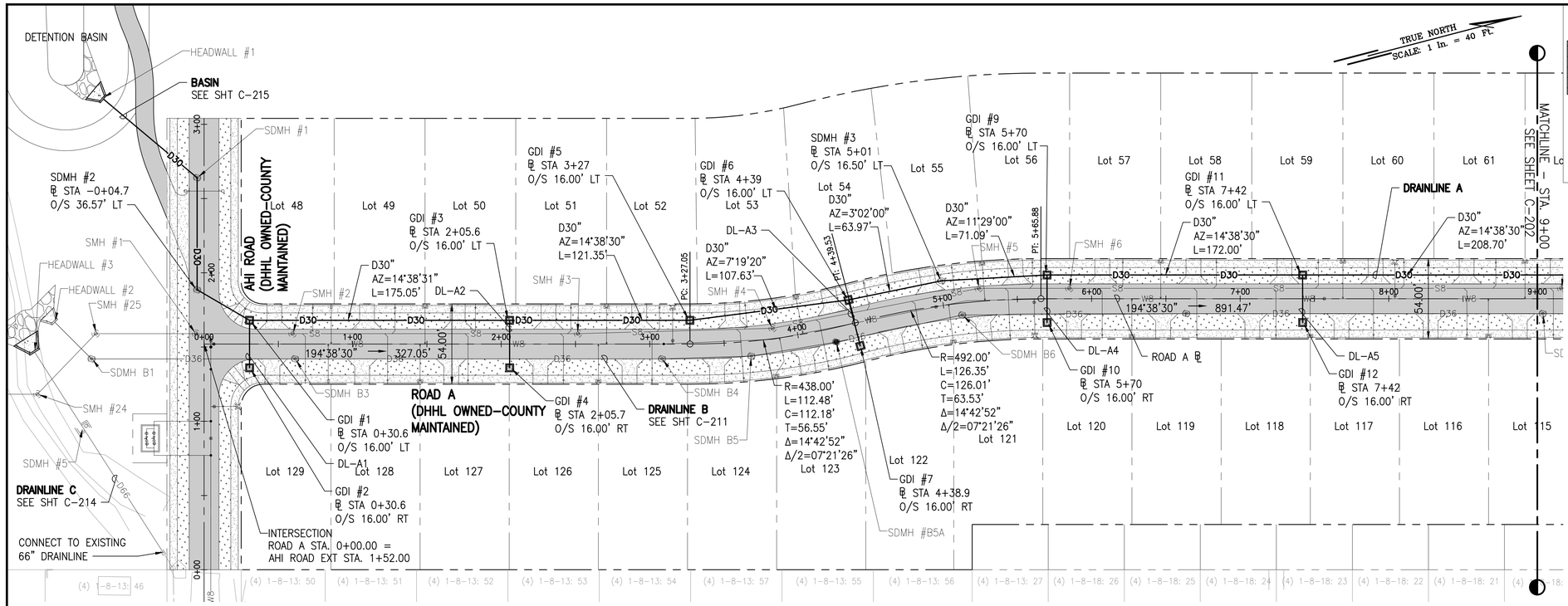

PLAN – ROAD A AND DRAINLINE A

SCALE: 1" = 40'

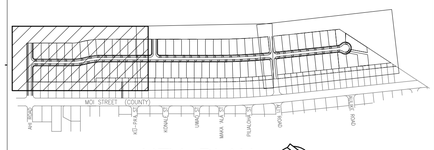

NOT TO SCALE

LEGEND:

- PROPERTY LINE
- LOT LINE
- D36 — DRAINLINE
- S8 — SEWERLINE
- W8 — WATERLINE
- GRATED DRAIN INLET (GDI), SEE DET 1/C-504
- STORM DRAIN MANHOLE (SDMH), SEE DET 2/C-505
- SEWER MANHOLE (SMH)
- FIRE HYDRANT
- ASPHALTIC CONCRETE PAVEMENT
- CONCRETE PAVEMENT
- GRASS

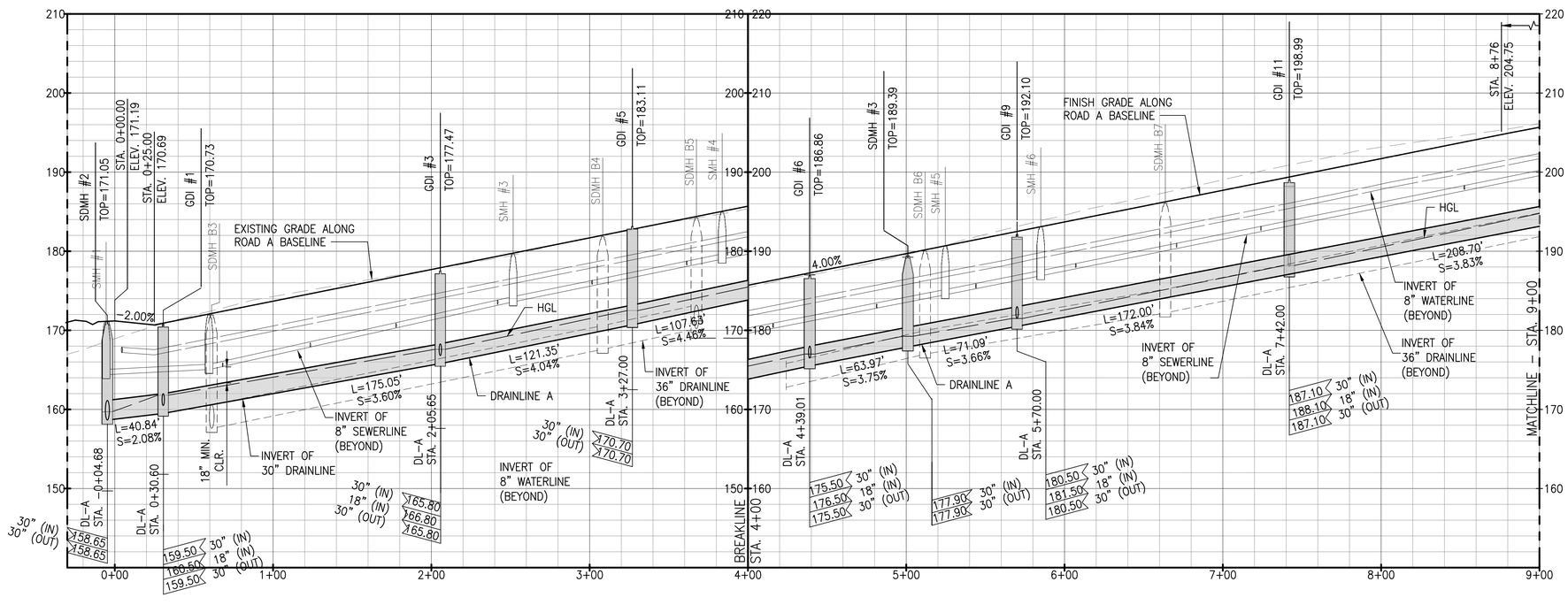

PROFILE – ROAD A AND DRAINLINE A

SCALE: HORIZ 1" = 40'
VERT 1" = 8'

NOTES:

1. FOR ROADWAY TYPICAL SECTIONS, SEE SHEET C-105.
2. FOR WATERLINE PLAN AND PROFILE, SEE SHEETS C-231 TO C-235.
3. FOR DRAINLINE B PLAN AND PROFILE, SEE SHEETS C-211 TO C-214.
4. FOR BASIN PLAN AND PROFILE, SEE SHEET C-215.
5. FOR DRAIN LATERAL PROFILES, SEE SHEET C-216 TO C-217.

GRAPHIC SCALE:

40' 20' 0 40' 80'
SCALE: 1" = 40'

8' 0 8' 16'
SCALE: 1" = 8'

RICHARD Y. SANTO
LICENSED PROFESSIONAL ENGINEER
NO. 8955-C
HAWAII USA

This work was prepared by me or under my supervision and I am a duly licensed Professional Engineer in the State of Hawaii. 4/30/24
Signature Date

NOTE: Contractor to check and verify dimensions at job before proceeding with work.

SSFM International, Inc.
501 Sumner Street
Suite 620
Honolulu, Hawaii 96817

REVISION	DATE	DESCRIPTION	MADE BY	APPROVED

PROJECT:
DEPARTMENT OF HAWAIIAN HOME LANDS
SITE AND INFRASTRUCTURE IMPROVEMENTS
FOR HANAPĒPĒ RESIDENTIAL LOTS, PHASE 2
TMK: (4) 1-8-007: 003 (PORTION) & (4) 2-8-007: 001 TO 050 (PORTION)
Hanapēpē, Waimea, Kaua'i, Hawai'i

ROAD A AND DRAINLINE A PLAN AND PROFILE – 1

THIS DOCUMENT CONTAINS INFORMATION PROPRIETARY TO SSFM INTERNATIONAL, INC. AND IS FURNISHED IN CONFIDENCE FOR THE LIMITED PURPOSE OF EVALUATION, BIDDING OR REVIEW. THIS DOCUMENT OR ITS CONTENTS MAY NOT BE USED FOR ANY OTHER PURPOSE AND MAY NOT BE REPRODUCED, ADAPTED OR DISCLOSED TO OTHERS WITHOUT THE PRIOR WRITTEN CONSENT OF SSFM INTERNATIONAL, INC.

DATE
NOVEMBER 2022

SHEET NUMBER
C-201

37 OF 109 SHEETS

W:_CIVIL 3D PROJECTS\2018_021.001 DHHL HANAPEPE RESIDENTIAL SUBDIVISION PHASE 2\01 CE DWG\C-201 - C-203 ROAD A AND DRAINLINE A PLAN AND PROFILES.DWG 11/14/2022 1:16 PM BBROWN

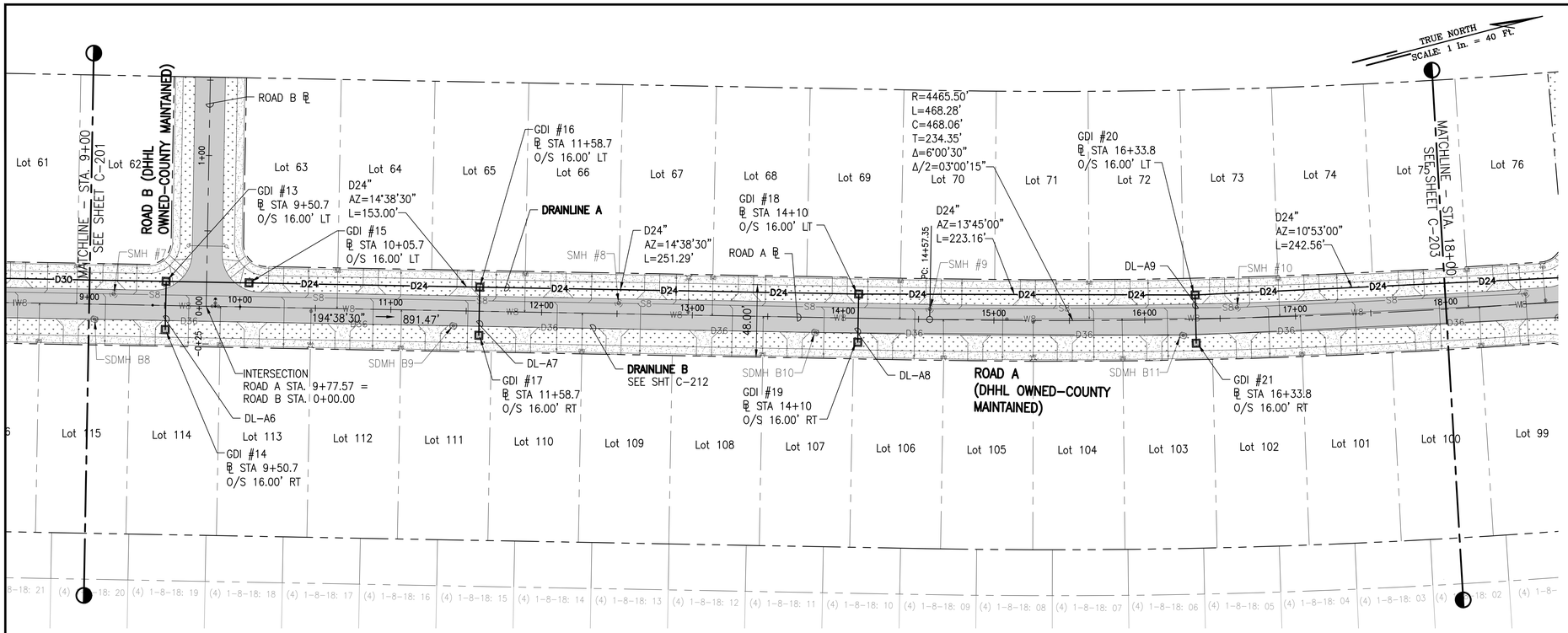

PLAN – ROAD A AND DRAINLINE A

SCALE: 1" = 40'

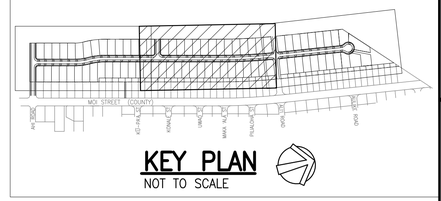

LEGEND:

- PROPERTY LINE
- LOT LINE
- D36 — DRAINLINE
- S8 — SEWERLINE
- W8 — WATERLINE
- GRATED DRAIN INLET (GDI), SEE DET 1/C-504
- STORM DRAIN MANHOLE (SDMH), SEE DET 2/C-505
- SEWER MANHOLE (SMH)
- FIRE HYDRANT
- ASPHALTIC CONCRETE PAVEMENT
- CONCRETE PAVEMENT
- GRASS

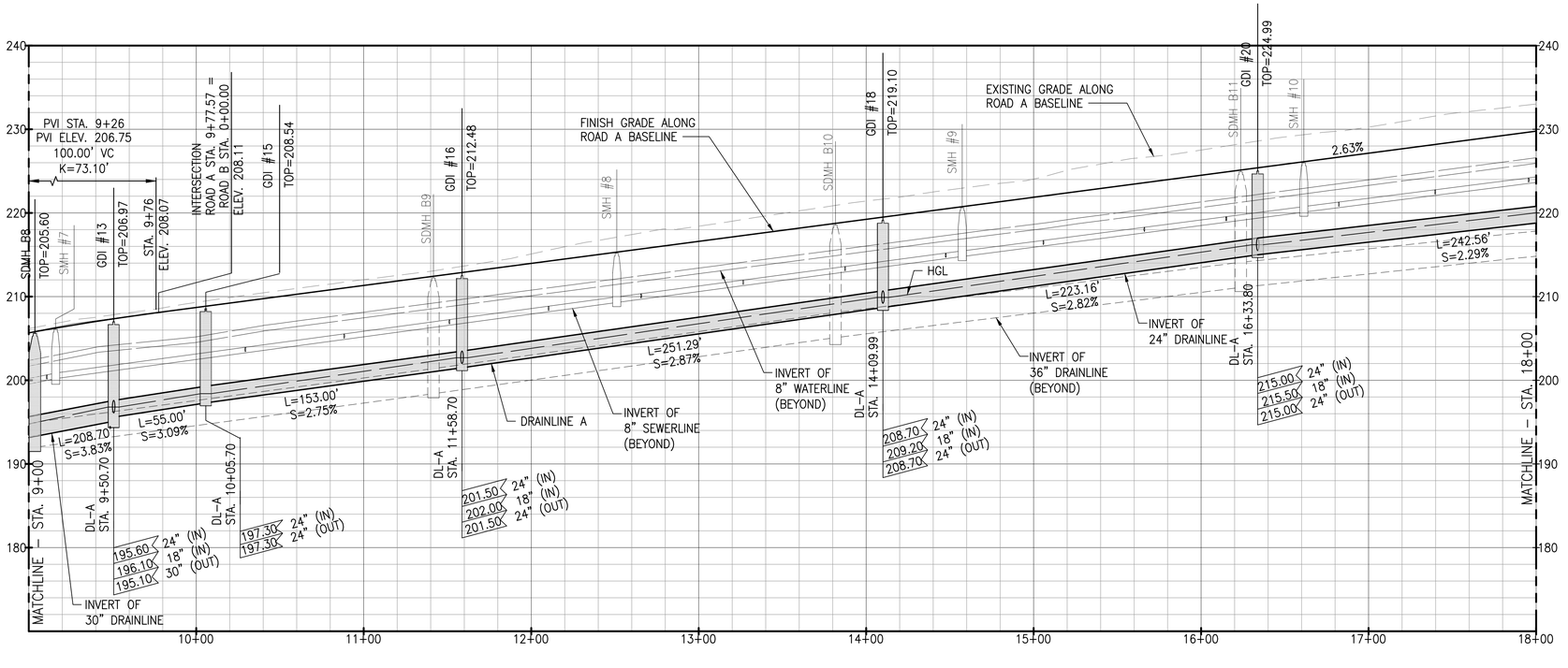

PROFILE – ROAD A AND DRAINLINE A

SCALE: HORIZ 1" = 40'
VERT 1" = 8'

NOTES:

1. FOR ROADWAY TYPICAL SECTIONS, SEE SHEET C-105.
2. FOR WATERLINE PLAN AND PROFILE, SEE SHEETS C-231 TO C-235.
3. FOR DRAINLINE B PLAN AND PROFILE, SEE SHEETS C-211 TO C-214.
4. FOR BASIN PLAN AND PROFILE, SEE SHEET C-215.
5. FOR DRAIN LATERAL PROFILES, SEE SHEET C-216 TO C-217.

GRAPHIC SCALE:

40' 20' 0 40' 80'
SCALE: 1" = 40'

8' 0 8' 16'
SCALE: 1" = 8'

RICHARD Y. SANTO
LICENSED PROFESSIONAL ENGINEER
NO. 8955-C
HAWAII USA

This work was prepared by me or under my supervision. Unless otherwise noted, I am not in responsible charge of the design of any fire protection (Electrical, Mechanical, Plumbing) systems. Professional Engineers Architects, Surveyors, and Landscape Architects)

4/30/24
Date of Signature

NOTE: Contractor to check and verify dimensions at job before proceeding with work.

SSFM International, Inc.
501 Sumner Street
Suite 620
Honolulu, Hawaii 96817

REVISION	DATE	DESCRIPTION	MADE BY	APPROVED

PROJECT:
DEPARTMENT OF HAWAIIAN HOME LANDS
SITE AND INFRASTRUCTURE IMPROVEMENTS
FOR HANAPĒPĒ RESIDENTIAL LOTS, PHASE 2
TMK: (4) 1-8-007: 003 (PORTION) & (4) 2-8-007: 001 TO 050 (PORTION)
Hanapēpē, Waimea, Kaua'i, Hawai'i

ROAD A AND DRAINLINE A PLAN AND PROFILE - 2

THIS DOCUMENT CONTAINS INFORMATION PROPRIETARY TO SSFM INTERNATIONAL, INC. AND IS FURNISHED IN CONFIDENCE FOR THE LIMITED PURPOSE OF EVALUATION, BIDDING OR REVIEW. THIS DOCUMENT OR ITS CONTENTS MAY NOT BE USED FOR ANY PURPOSE OTHER THAN THAT AUTHORIZED BY SSFM INTERNATIONAL, INC. AND NO RIGHTS ARE GRANTED TO OTHERS WITHOUT THE PRIOR WRITTEN CONSENT OF SSFM INTERNATIONAL, INC.

DATE
NOVEMBER 2022

SHEET NUMBER
C-202
38 OF 109 SHEETS

W:_CIVIL 3D PROJECTS\2018_021.001 DHHL HANAPEPE RESIDENTIAL SUBDIVISION PHASE 2\01 CE DWG\C-201 - C-203 ROAD A AND DRAINLINE A PLAN AND PROFILES.DWG 11/14/2022 7:21 AM BBROWN

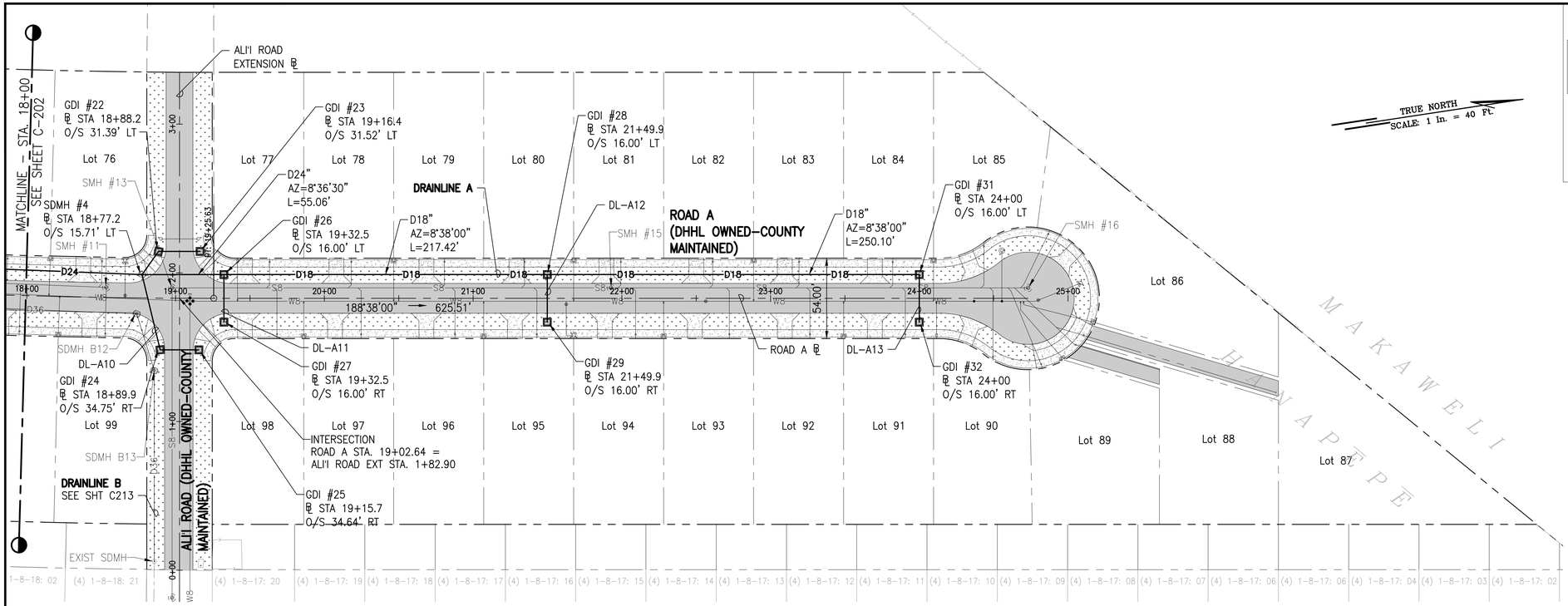

PLAN – ROAD A AND DRAINLINE A

SCALE: 1" = 40'

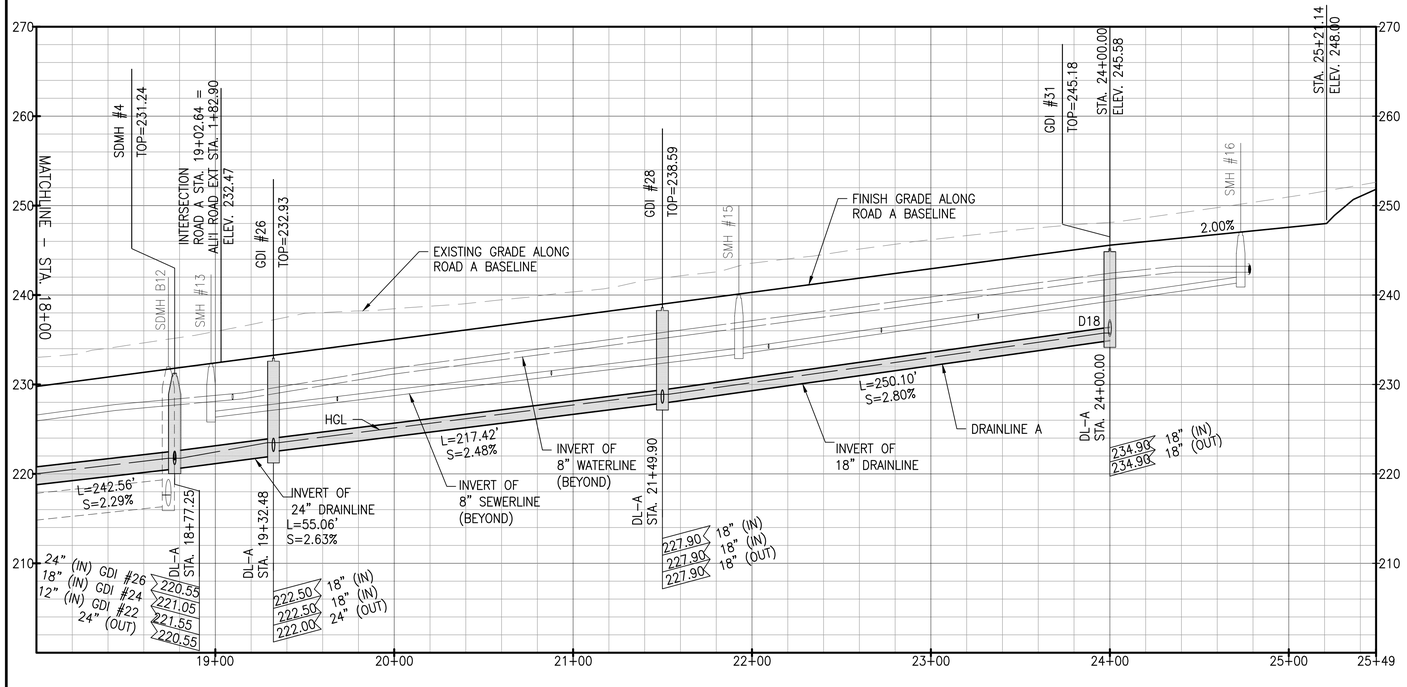

PROFILE – ROAD A AND DRAINLINE A

SCALE: HORIZ 1" = 40'
VERT 1" = 8'

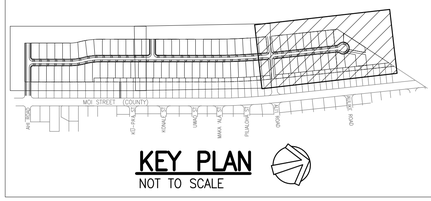

KEY PLAN

NOT TO SCALE

LEGEND:

- PROPERTY LINE
- LOT LINE
- D36 — DRAINLINE
- S8 — SEWERLINE
- W8 — WATERLINE
- GRATED DRAIN INLET (GDI), SEE DET 1/C-504
- STORM DRAIN MANHOLE (SDMH), SEE DET 2/C-505
- SEWER MANHOLE (SMH)
- FIRE HYDRANT
- ASPHALTIC CONCRETE PAVEMENT
- CONCRETE PAVEMENT
- GRASS

NOTES:

1. FOR ROADWAY TYPICAL SECTIONS, SEE SHEET C-105.
2. FOR WATERLINE PLAN AND PROFILE, SEE SHEETS C-231 TO C-235.
3. FOR DRAINLINE B PLAN AND PROFILE, SEE SHEETS C-211 TO C-214.
4. FOR BASIN PLAN AND PROFILE, SEE SHEET C-215.
5. FOR DRAIN LATERAL PROFILES, SEE SHEET C-216 TO C-217.

GRAPHIC SCALE:

40' 20' 0 40' 80'
SCALE: 1" = 40'

8' 0 8' 16'
SCALE: 1" = 8'

RICHARD Y. SANTO
LICENSED PROFESSIONAL ENGINEER
NO. 8955-C
HAWAII USA

This work was prepared by me or under my supervision and I am a duly licensed professional engineer under the laws of the State of Hawaii. Date of expiration: April 30, 2024. Pursuant to Section 464-8, Hawaii Revised Statutes, I am not licensed to practice Professional Engineering, Architecture, Surveying, and Landscape Architecture.

4/30/24
Signature

NOTE: Contractor to check and verify dimensions at job before proceeding with work.

SSFM International, Inc.
501 Sumner Street
Suite 620
Honolulu, Hawaii 96817

REVISION	DATE	DESCRIPTION	MADE BY	APPROVED

PROJECT:
DEPARTMENT OF HAWAIIAN HOME LANDS
SITE AND INFRASTRUCTURE IMPROVEMENTS
FOR HANAPĒPĒ RESIDENTIAL LOTS, PHASE 2
TMK: (4) 1-8-007: 003 (PORTION) & (4) 2-8-007: 001 TO 050 (PORTION)
Hanapēpē, Waimea, Kaua'i, Hawai'i

ROAD A AND DRAINLINE A PLAN AND PROFILE - 3

THIS DOCUMENT CONTAINS INFORMATION PROPRIETARY TO SSFM INTERNATIONAL, INC. AND IS FURNISHED IN CONFIDENCE FOR THE LIMITED PURPOSE OF EVALUATION, BIDDING OR REVIEW. THIS DOCUMENT OR ITS CONTENTS MAY NOT BE USED FOR ANY OTHER PURPOSE AND MAY NOT BE REPRODUCED OR DISCLOSED TO OTHERS WITHOUT THE PRIOR WRITTEN CONSENT OF SSFM INTERNATIONAL, INC.

DATE
NOVEMBER 2022

SHEET NUMBER
C-203
39 OF 109 SHEETS

W:_CIVIL 3D PROJECTS\2018_021.001 DHHL HANAPEPE RESIDENTIAL SUBDIVISION PHASE 2\01 CE DWG\C-201 - C-203 ROAD A AND DRAINLINE A PLAN AND PROFILES.DWG 11/14/2022 7:21 AM BBROWN

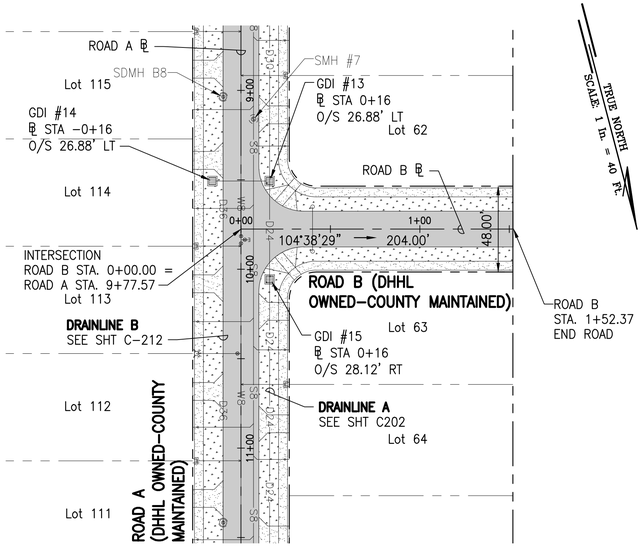

PLAN − ROAD B

SCALE: 1" = 40'

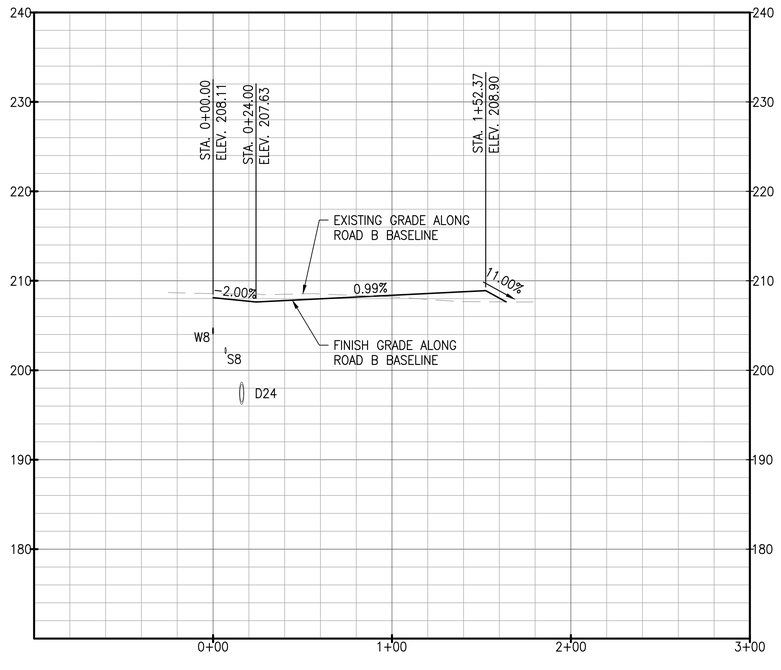

PROFILE − ROAD B

SCALE: HORIZ 1" = 40'
VERT 1" = 8'

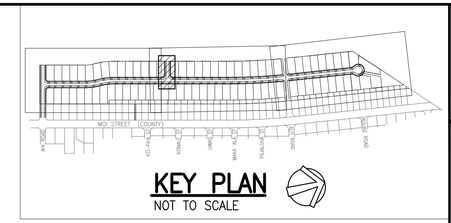

KEY PLAN

NOT TO SCALE

LEGEND:

- PROPERTY LINE
- LOT LINE
- D36 — DRAINLINE
- S8 — SEWERLINE
- W8 — WATERLINE
- GRATED DRAIN INLET (GDI), SEE DET 1/C−504
- STORM DRAIN MANHOLE (SDMH), SEE DET 2/C−505
- SEWER MANHOLE (SMH)
- FIRE HYDRANT
- ASPHALTIC CONCRETE PAVEMENT
- CONCRETE PAVEMENT
- GRASS

NOTES:

1. FOR ROADWAY TYPICAL SECTIONS, SEE SHEET C−105.
2. FOR WATERLINE PLAN AND PROFILE, SEE SHEETS C−231 TO C−235.
3. FOR DRAINLINE B PLAN AND PROFILE, SEE SHEETS C−211 TO C−214.
4. FOR BASIN PLAN AND PROFILE, SEE SHEET C−215.
5. FOR DRAIN LATERAL PROFILES, SEE SHEET C−216 TO C−217.

GRAPHIC SCALE:

40' 20' 0 40' 80'
SCALE: 1" = 40'

8' 0 8' 16'
SCALE: 1" = 8'

RICHARD Y. SANTO
LICENSED PROFESSIONAL ENGINEER
NO. 8955−C
HAWAII USA

This work was prepared by me or under my supervision and was prepared for use by me or my employer. I am licensed as a Professional Engineer, Architect, Surveyor, and Landscape Architect. 4/30/24 expiration date of the license

NOTE: Contractor to check and verify dimensions at job before proceeding with work.

SSFM International
SSFM International, Inc.
501 Sumner Street
Suite 620
Honolulu, Hawaii 96817

REVISION	DATE	DESCRIPTION	MADE BY	APPROVED

PROJECT:
DEPARTMENT OF HAWAIIAN HOME LANDS
SITE AND INFRASTRUCTURE IMPROVEMENTS
FOR HANAPĒPĒ RESIDENTIAL LOTS, PHASE 2
TMK: (4) 1-8-007: 003 (PORTION) & (4) 2-8-007: 001 TO 050 (PORTION)
Hanapēpē, Waimea, Kaua'i, Hawai'i

ROAD B AND DRAINLINE PLAN AND PROFILE

THIS DOCUMENT CONTAINS INFORMATION PROPRIETARY TO SSFM INTERNATIONAL, INC., AND IS FURNISHED IN CONFIDENCE FOR THE LIMITED PURPOSE OF EVALUATION, BIDDING OR REVIEW. THIS DOCUMENT OR ITS CONTENTS MAY NOT BE USED FOR ANY OTHER PURPOSE AND MAY NOT BE REPRODUCED OR DISCLOSED TO OTHERS WITHOUT THE PRIOR WRITTEN CONSENT OF SSFM INTERNATIONAL, INC.

DATE
NOVEMBER 2022

SHEET NUMBER
C-204
40 OF 109 SHEETS

W:_CIVIL 3D PROJECTS\2018_021.001 DHHL HANAPEPE RESIDENTIAL SUBDIVISION PHASE 2\01 CE DWG\C-204 ROAD B PLAN AND PROFILE.DWG 11/10/2022 3:44 PM BBROWN

PRINTED: 11/14/22

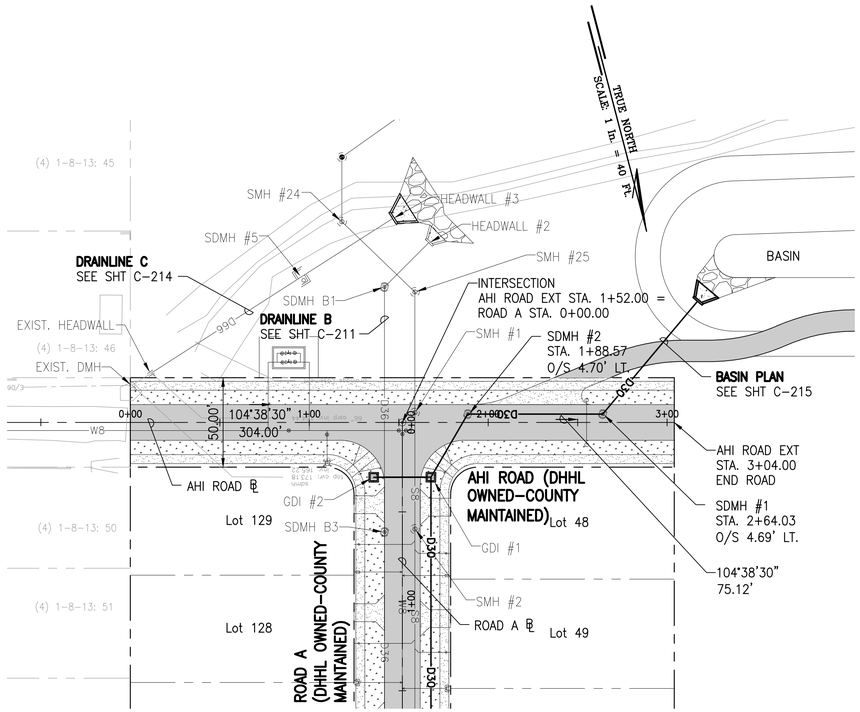

PLAN – AHI ROAD AND DRAINLINE

SCALE: 1" = 40'

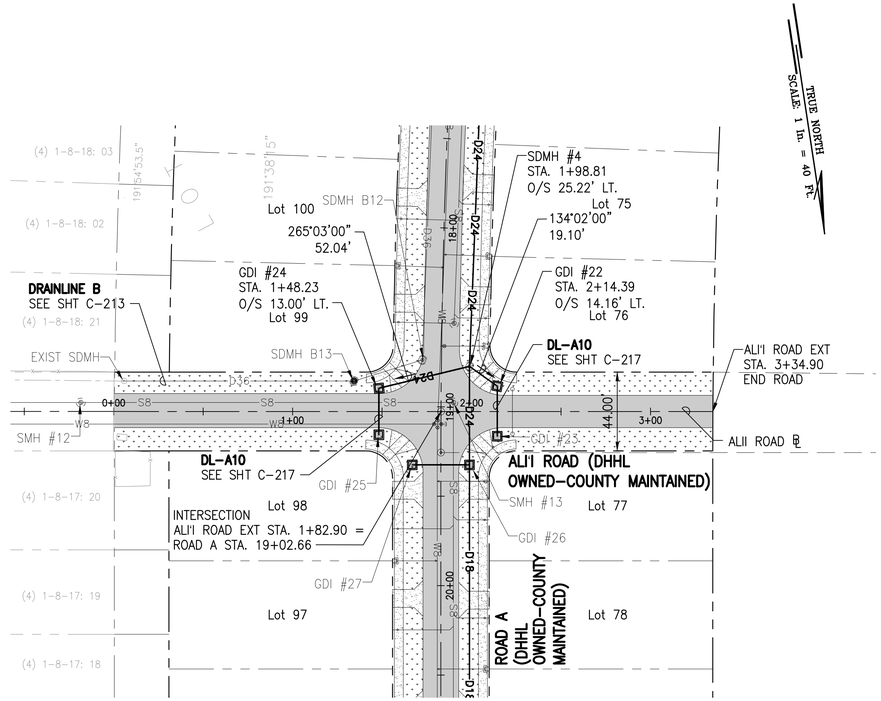

PLAN – ALI'I ROAD AND DRAINLINE

SCALE: 1" = 40'

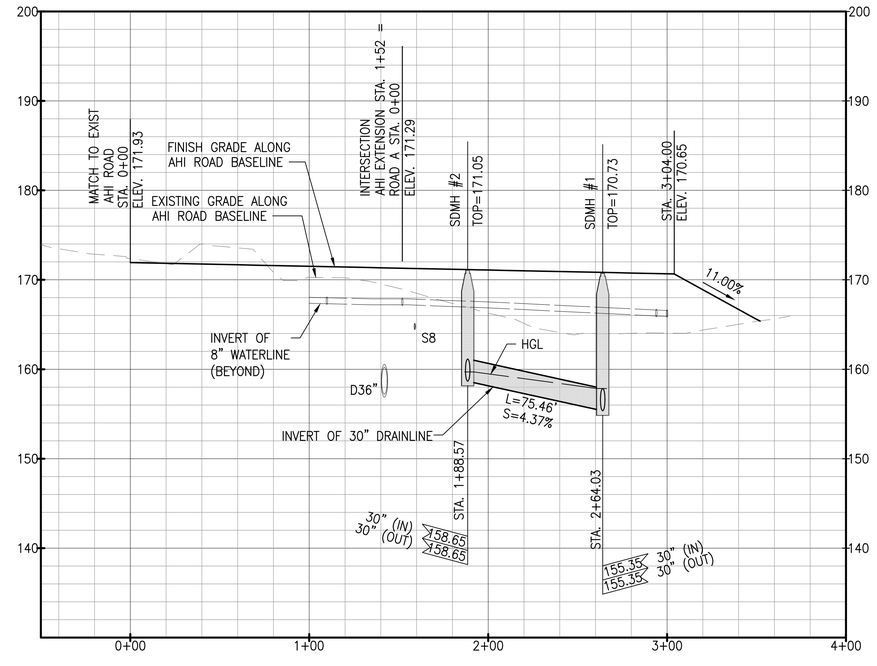

PROFILE – AHI ROAD AND DRAINLINE

SCALE: HORIZ 1" = 40'
VERT 1" = 8'

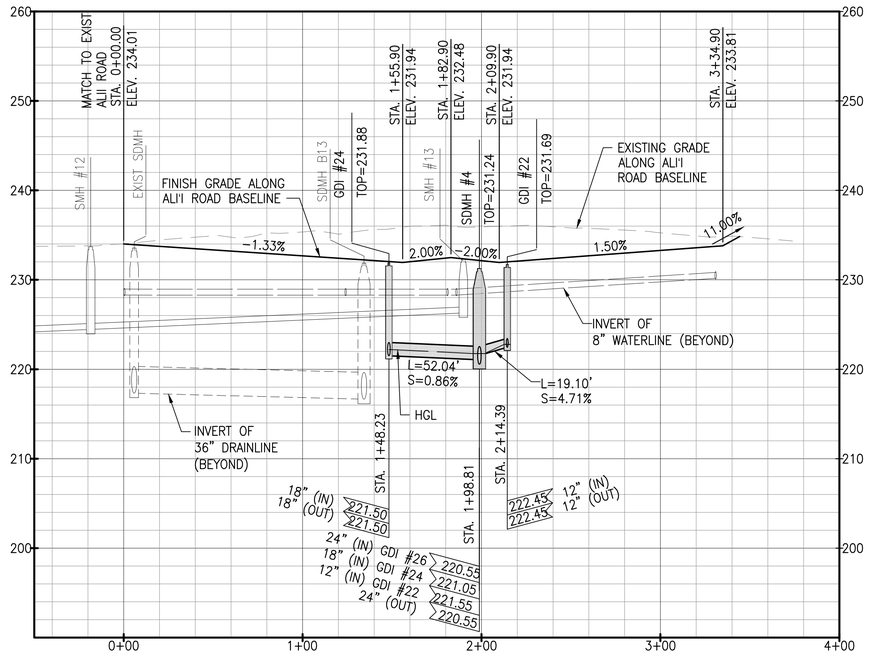

PROFILE – ALI'I ROAD AND DRAINLINE

SCALE: HORIZ 1" = 40'
VERT 1" = 8'

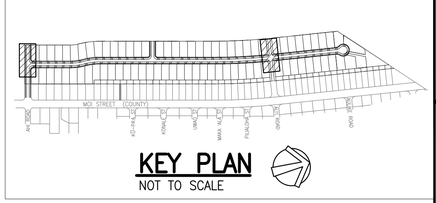

LEGEND:

- PROPERTY LINE
- LOT LINE
- D36 — DRAINLINE
- S8 — SEWERLINE
- W8 — WATERLINE
- GRATED DRAIN INLET (GDI), SEE DET 1/C-504
- STORM DRAIN MANHOLE (SDMH), SEE DET 2/C-505
- SEWER MANHOLE (SMH)
- FIRE HYDRANT
- ASPHALTIC CONCRETE PAVEMENT
- CONCRETE PAVEMENT
- GRASS

NOTES:

1. FOR ROADWAY TYPICAL SECTIONS, SEE SHEET C-105.
2. FOR WATERLINE PLAN AND PROFILE, SEE SHEETS C-231 TO C-235.
3. FOR DRAINLINE B PLAN AND PROFILE, SEE SHEETS C-211 TO C-214.
4. FOR BASIN PLAN AND PROFILE, SEE SHEET C-215.
5. FOR DRAIN LATERAL PROFILES, SEE SHEET C-216 TO C-217.

GRAPHIC SCALE:

40' 20' 0 40' 80'
SCALE: 1" = 40'

8' 0 8' 16'
SCALE: 1" = 8'

RICHARD Y. SANTO
LICENSED PROFESSIONAL ENGINEER
NO. 8955-C
HAWAII USA

This work was prepared by me or under my supervision and is not to be used in whole or in part for any construction. Drawings, Specifications, Plans, Reports, or Documents prepared by Professional Engineers, Architects, Surveyors, and Landscape Architects) — Signature — 4/30/24 — Date

NOTE: Contractor to check and verify dimensions at job before proceeding with work.

SSFM International
SSFM International, Inc.
501 Sumner Street
Suite 620
Honolulu, Hawaii 96817

REVISION	DATE	DESCRIPTION	MADE BY	APPROVED

PROJECT:
DEPARTMENT OF HAWAIIAN HOME LANDS
SITE AND INFRASTRUCTURE IMPROVEMENTS
FOR HANAPĒPĒ RESIDENTIAL LOTS, PHASE 2
TMK: (4) 1-8-007: 003 (PORTION) & (4) 2-8-007: 001 TO 050 (PORTION)
Hanapēpē, Waimea, Kaua'i, Hawai'i

AHI ROAD AND ALI ROAD DRAINLINE PLAN AND PROFILE

THIS DOCUMENT CONTAINS INFORMATION PROPRIETARY TO SSFM INTERNATIONAL, INC. AND IS FURNISHED IN CONFIDENCE FOR THE LIMITED PURPOSE OF EVALUATION, BIDDING OR REVIEW. THIS DOCUMENT OR ITS CONTENTS MAY NOT BE USED FOR ANY PURPOSE OTHER THAN THAT AUTHORIZED BY SSFM INTERNATIONAL, INC. NO RIGHTS ARE GRANTED TO OTHERS WITHOUT THE PRIOR WRITTEN CONSENT OF SSFM INTERNATIONAL, INC.

DATE
NOVEMBER 2022

SHEET NUMBER
C-205
41 OF 109 SHEETS

W:_CIVIL 3D PROJECTS\2018_021.001 DHHL HANAPEPE RESIDENTIAL SUBDIVISION PHASE 2\01 CE DWG\C-205 AHI ROAD AND ALII ROAD DRAINLINE PLAN AND PROFILE.DWG 11/14/2022 7:28 AM BBROWN

PRINTED: 11/14/22

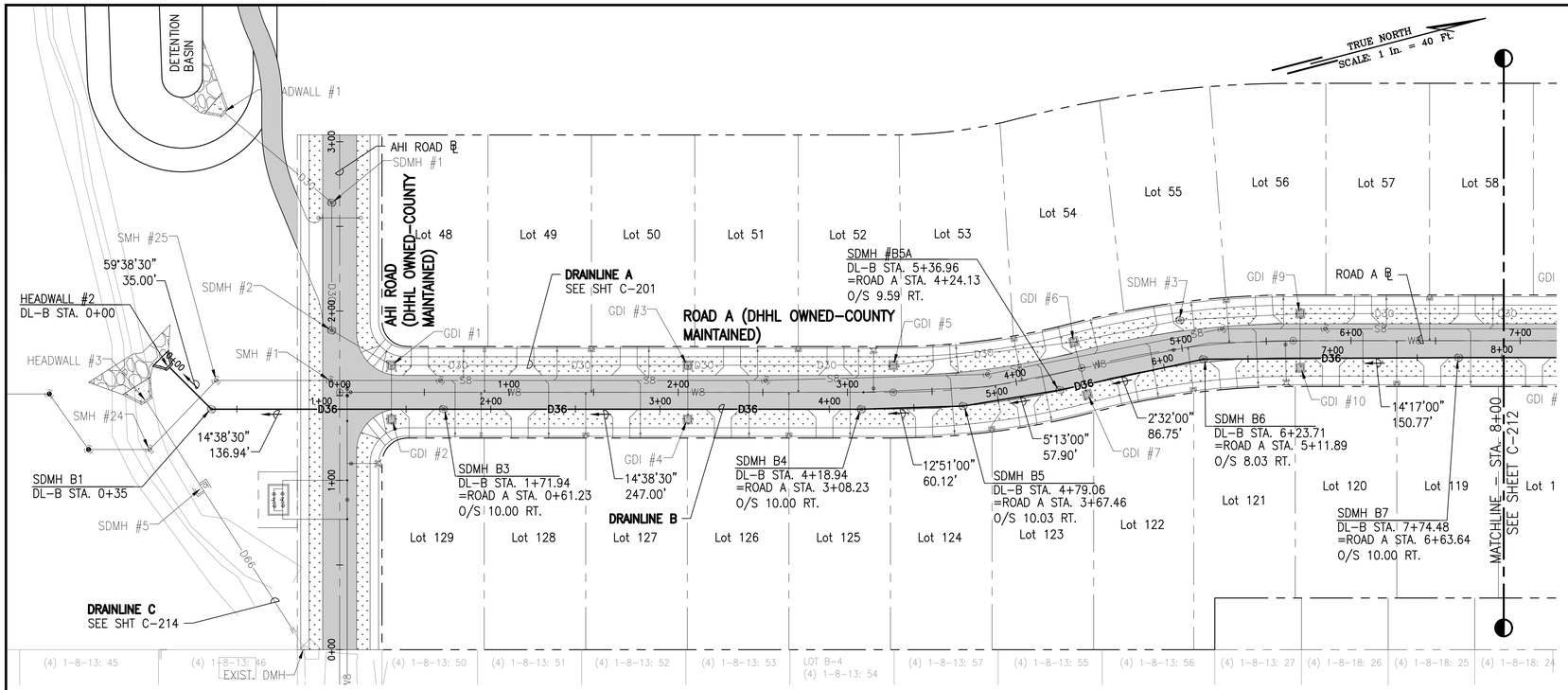

PLAN — DRAINLINE B

SCALE: 1" = 40'

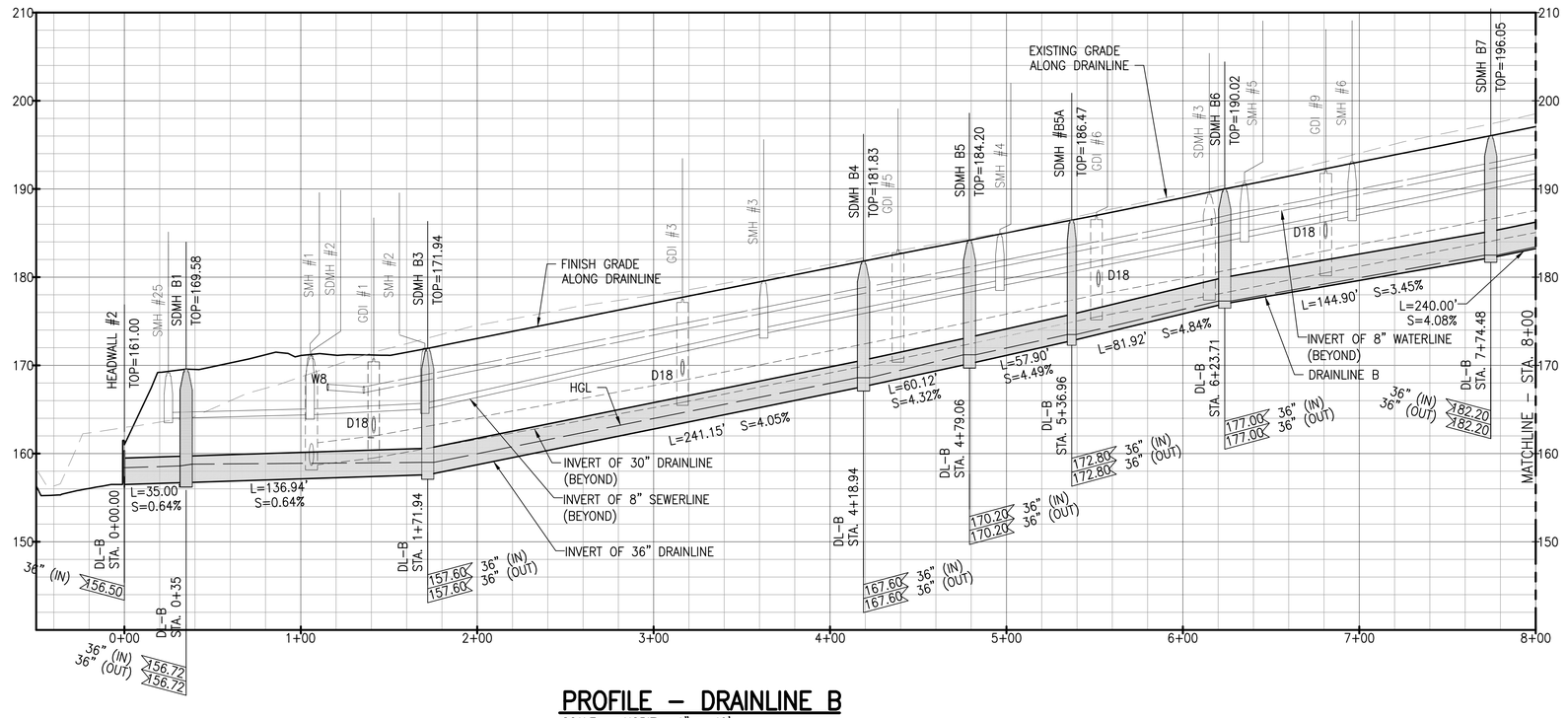

PROFILE — DRAINLINE B

SCALE: HORIZ 1" = 40'
VERT 1" = 8'

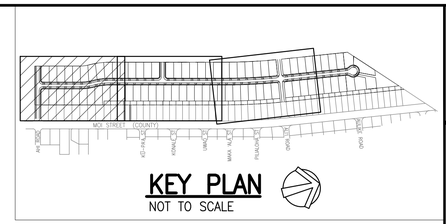

LEGEND:

- PROPERTY LINE
- LOT LINE
- D36 — DRAINLINE
- S8 — SEWERLINE
- W8 — WATERLINE
- GRATED DRAIN INLET (GDI), SEE DET 1/C-504
- STORM DRAIN MANHOLE (SDMH), SEE DET 2/C-505
- SEWER MANHOLE (SMH)
- FIRE HYDRANT
- ASPHALTIC CONCRETE PAVEMENT
- CONCRETE PAVEMENT
- GRASS

NOTES:

1. FOR ROADWAY TYPICAL SECTIONS, SEE SHEET C-105.
2. FOR WATERLINE PLAN AND PROFILE, SEE SHEETS C-231 TO C-235.
3. FOR SEWERLINE PLAN AND PROFILE, SEE SHEETS C-221 TO C-226.
4. FOR BASIN PLAN AND PROFILE, SEE SHEET C-215.
5. FOR DRAIN LATERAL PROFILES, SEE SHEET C-216 TO C-217.

GRAPHIC SCALE:

40' 20' 0 40' 80'
SCALE: 1" = 40'

8' 0 8' 16'
SCALE: 1" = 8'

RICHARD Y. SANTO
LICENSED PROFESSIONAL ENGINEER
NO. 8955-C
HAWAII USA

This work was prepared by me or under my supervision and I am a duly licensed professional engineer under the laws of the State of Hawaii. Professional Engineers, Architects, Surveyors, and Landscape Architects)

4/30/24
Date of Signature

NOTE: Contractor to check and verify dimensions at job before proceeding with work.

SSFM International, Inc.
501 Sumner Street
Suite 620
Honolulu, Hawaii 96817

REVISION	DATE	DESCRIPTION	MADE BY	APPROVED

PROJECT:
DEPARTMENT OF HAWAIIAN HOME LANDS
SITE AND INFRASTRUCTURE IMPROVEMENTS
FOR HANAPĒPĒ RESIDENTIAL LOTS, PHASE 2
TMK: (4) 1-8-007: 003 (PORTION) & (4) 2-8-007: 001 TO 050 (PORTION)
Hanapēpē, Waimea, Kaua'i, Hawai'i

DRAINLINE B PLAN AND PROFILE - 1

THIS DOCUMENT CONTAINS INFORMATION PROPRIETARY TO SSFM INTERNATIONAL, INC. AND IS FURNISHED IN CONFIDENCE FOR THE LIMITED PURPOSE OF EVALUATION, BIDDING OR REVIEW. THIS DOCUMENT OR ITS CONTENTS MAY NOT BE USED FOR ANY OTHER PURPOSE AND MAY NOT BE REPRODUCED, ADAPTED OR DISCLOSED TO OTHERS WITHOUT THE PRIOR WRITTEN CONSENT OF SSFM INTERNATIONAL, INC.

DATE
NOVEMBER 2022

SHEET NUMBER
C-211
42 OF 109 SHEETS

W:_CIVIL 3D PROJECTS\2018_021.001 DHHL HANAPEPE RESIDENTIAL SUBDIVISION PHASE 2\01 CE DWG\C-211 - C-213 DRAINLINE B PLAN AND PROFILES.DWG 11/14/2022 9:52 AM BBROWN

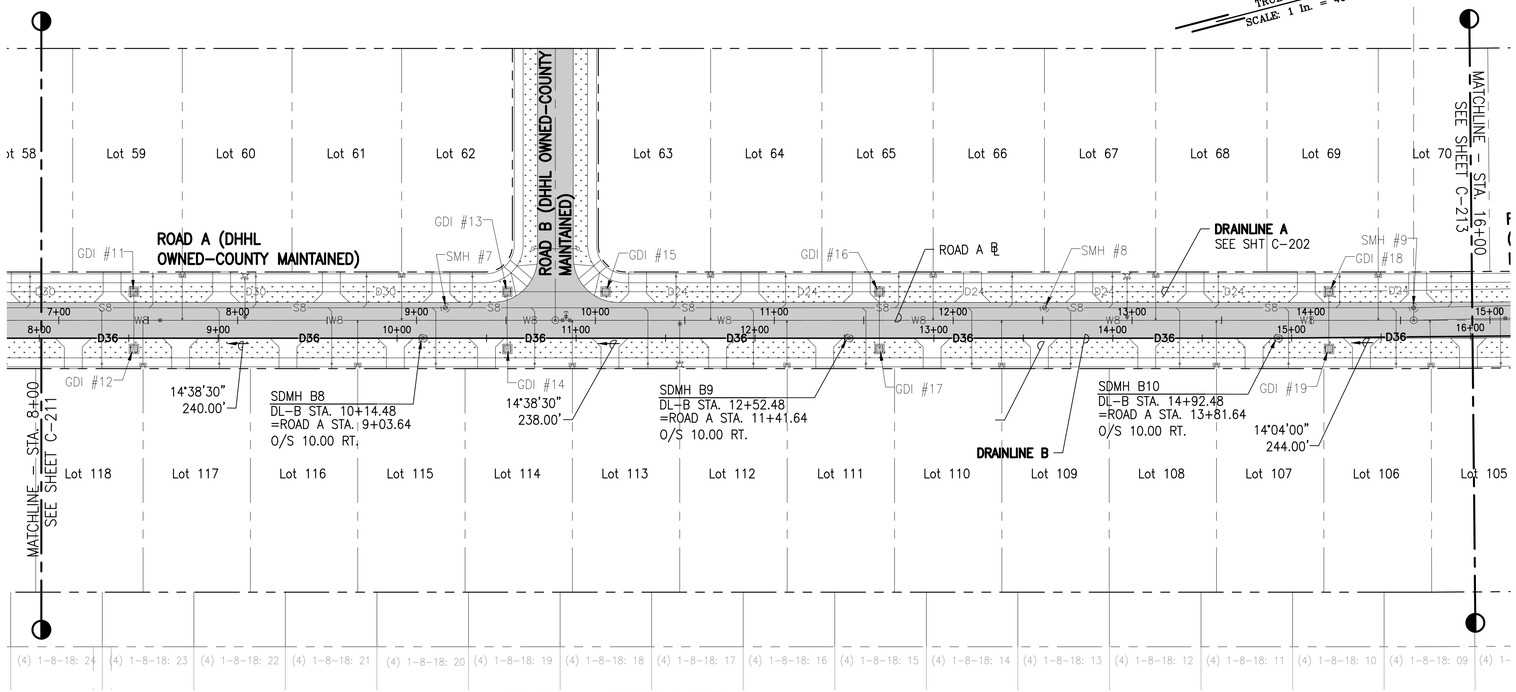

PLAN – DRAINLINE B

SCALE: 1" = 40'

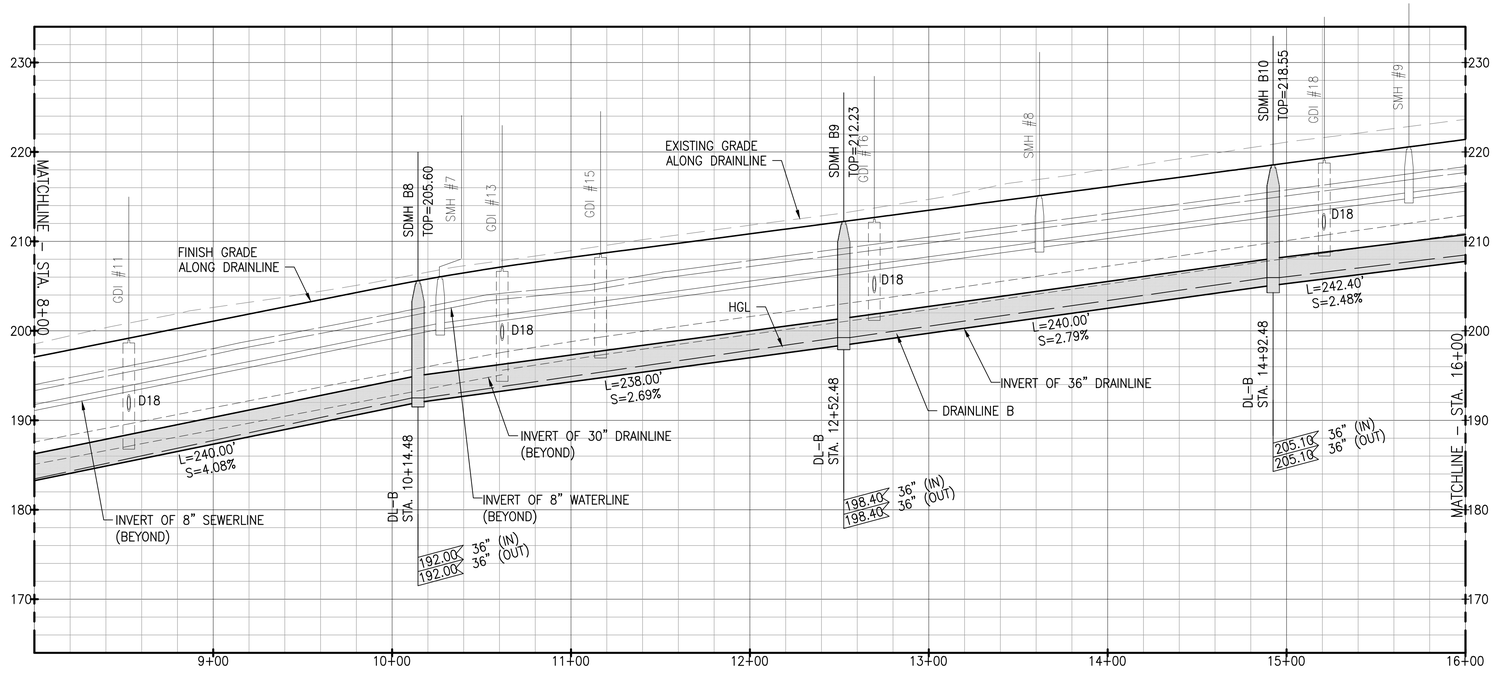

PROFILE – DRAINLINE B

SCALE: HORIZ 1" = 40'
VERT 1" = 8'

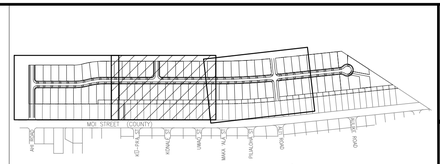

KEY PLAN

NOT TO SCALE

LEGEND:

- PROPERTY LINE
- LOT LINE
- D36 — DRAINLINE
- S8 — SEWERLINE
- W8 — WATERLINE
- GRATED DRAIN INLET (GDI), SEE DET 1/C-504
- STORM DRAIN MANHOLE (SDMH), SEE DET 2/C-505
- SEWER MANHOLE (SMH)
- FIRE HYDRANT
- ASPHALTIC CONCRETE PAVEMENT
- CONCRETE PAVEMENT
- GRASS

NOTES:

1. FOR ROADWAY TYPICAL SECTIONS, SEE SHEET C-105.
2. FOR WATERLINE PLAN AND PROFILE, SEE SHEETS C-231 TO C-235.
3. FOR SEWERLINE PLAN AND PROFILE, SEE SHEETS C-221 TO C-226.
4. FOR BASIN PLAN AND PROFILE, SEE SHEET C-215.
5. FOR DRAIN LATERAL PROFILES, SEE SHEET C-216 TO C-217.

GRAPHIC SCALE:

40' 20' 0 40' 80'
SCALE: 1" = 40'

8' 0 8' 16'
SCALE: 1" = 8'

RICHARD Y. SANTO
LICENSED PROFESSIONAL ENGINEER
NO. 8955-C
HAWAII USA

This work was prepared by me or under my supervision and is to the best of my knowledge and belief, true, accurate, and correct in accordance with the standard of practice of the Professional Engineers, Architects, Surveyors, and Landscape Architects Board.

4/30/24
Date of Signature

NOTE: Contractor to check and verify dimensions at job before proceeding with work.

SSFM International, Inc.
501 Sumner Street
Suite 620
Honolulu, Hawaii 96817

REVISION	DATE	DESCRIPTION	MADE BY	APPROVED

PROJECT:
DEPARTMENT OF HAWAIIAN HOME LANDS
SITE AND INFRASTRUCTURE IMPROVEMENTS
FOR HANAPĒPĒ RESIDENTIAL LOTS, PHASE 2
TMK: (4) 1-8-007: 003 (PORTION) & (4) 2-8-007: 001 TO 050 (PORTION)
Hanapēpē, Waimea, Kaua'i, Hawai'i

DRAINLINE B PLAN AND PROFILE - 2

THIS DOCUMENT CONTAINS INFORMATION PROPRIETARY TO SSFM INTERNATIONAL, INC. AND IS FURNISHED IN CONFIDENCE FOR THE LIMITED PURPOSE OF EVALUATION, BIDDING OR REVIEW. THIS DOCUMENT OR ITS CONTENTS MAY NOT BE USED FOR ANY OTHER PURPOSE AND MAY NOT BE REPRODUCED, ADAPTED OR DISCLOSED TO OTHERS WITHOUT THE PRIOR WRITTEN CONSENT OF SSFM INTERNATIONAL, INC.

DATE
NOVEMBER 2022

SHEET NUMBER
C-212
43 OF 109 SHEETS

W:_CIVIL 3D PROJECTS\2018_021.001 DHHL HANAPEPE RESIDENTIAL SUBDIVISION PHASE 2\01 CE DWG\C-211 - C-213 DRAINLINE B PLAN AND PROFILES.DWG 11/14/2022 8:52 AM BBROWN

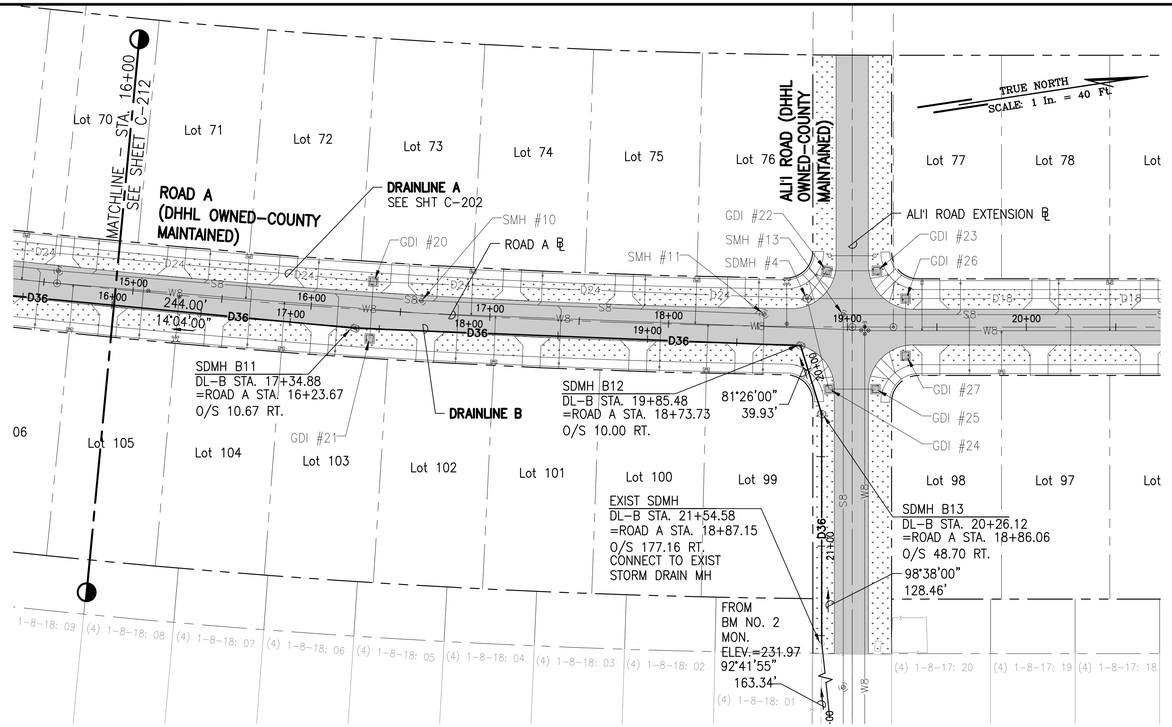

PLAN – DRAINLINE B

SCALE: 1" = 40'

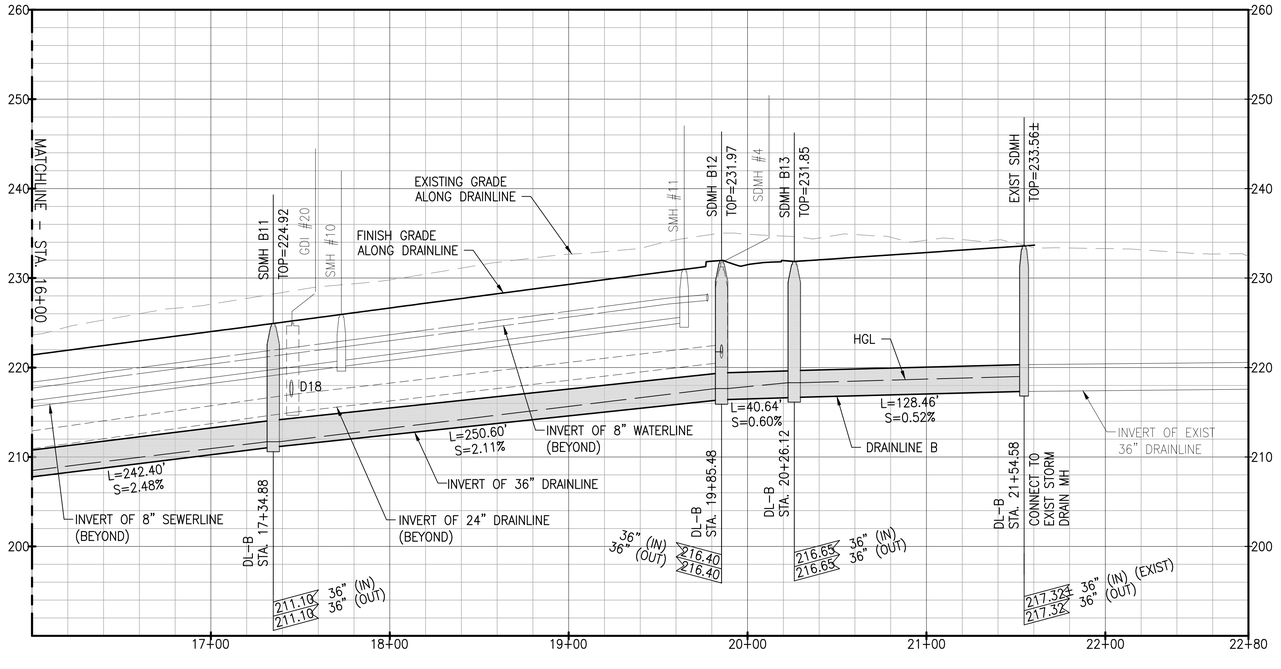

PROFILE – DRAINLINE B

SCALE: HORIZ 1" = 40'
VERT 1" = 8'

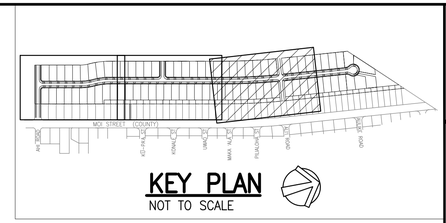

LEGEND:

- PROPERTY LINE
- LOT LINE
- D36 — DRAINLINE
- S8 — SEWERLINE
- W8 — WATERLINE
- GRATED DRAIN INLET (GDI), SEE DET 1/C-504
- STORM DRAIN MANHOLE (SDMH), SEE DET 2/C-505
- SEWER MANHOLE (SMH)
- FIRE HYDRANT
- ASPHALTIC CONCRETE PAVEMENT
- CONCRETE PAVEMENT
- GRASS

NOTES:

1. FOR ROADWAY TYPICAL SECTIONS, SEE SHEET C-105.
2. FOR WATERLINE PLAN AND PROFILE, SEE SHEETS C-231 TO C-235.
3. FOR SEWERLINE PLAN AND PROFILE, SEE SHEETS C-221 TO C-226.
4. FOR BASIN PLAN AND PROFILE, SEE SHEET C-215.
5. FOR DRAIN LATERAL PROFILES, SEE SHEET C-216 TO C-217.

GRAPHIC SCALE:

40' 20' 0 40' 80'
SCALE: 1" = 40'

8' 0 8' 16'
SCALE: 1" = 40'

RICHARD Y. SANTO
LICENSED PROFESSIONAL ENGINEER
NO. 8955-C
HAWAII USA

This work was prepared by me or under my supervision and I am a duly licensed professional engineer under the laws of the State of Hawaii, Board for Professional Engineers, Architects, Surveyors, and Landscape Architects.

4/30/24
Date of Signature

NOTE: Contractor to check and verify dimensions at job before proceeding with work.

SSFM International, Inc.
501 Sumner Street
Suite 620
Honolulu, Hawaii 96817

REVISION	DATE	DESCRIPTION	MADE BY	APPROVED

PROJECT:
DEPARTMENT OF HAWAIIAN HOME LANDS
SITE AND INFRASTRUCTURE IMPROVEMENTS
FOR HANAPĒPĒ RESIDENTIAL LOTS, PHASE 2
TMK: (4) 1-8-007: 003 (PORTION) & (4) 2-8-007: 001 TO 050 (PORTION)
Hanapēpē, Waimea, Kaua'i, Hawai'i

DRAINLINE B PLAN AND PROFILE - 3

THIS DOCUMENT CONTAINS INFORMATION PROPRIETARY TO SSFM INTERNATIONAL, INC. AND IS FURNISHED IN CONFIDENCE FOR THE LIMITED PURPOSE OF EVALUATION, BIDDING OR REVIEW. THIS DOCUMENT OR ITS CONTENTS MAY NOT BE USED FOR ANOTHER PURPOSE, MAY NOT BE REPRODUCED OR ISSUED TO OTHERS WITHOUT THE PRIOR WRITTEN CONSENT OF SSFM INTERNATIONAL, INC.

DATE
NOVEMBER 2022

SHEET NUMBER
C-213
44 OF 109 SHEETS

W:_CIVIL 3D PROJECTS\2018_021.001 DHHL HANAPEPE RESIDENTIAL SUBDIVISION PHASE 2\01 CE DWG\C-211 - C-213 DRAINLINE B PLAN AND PROFILES.DWG 11/14/2022 9:52 AM BBROWN

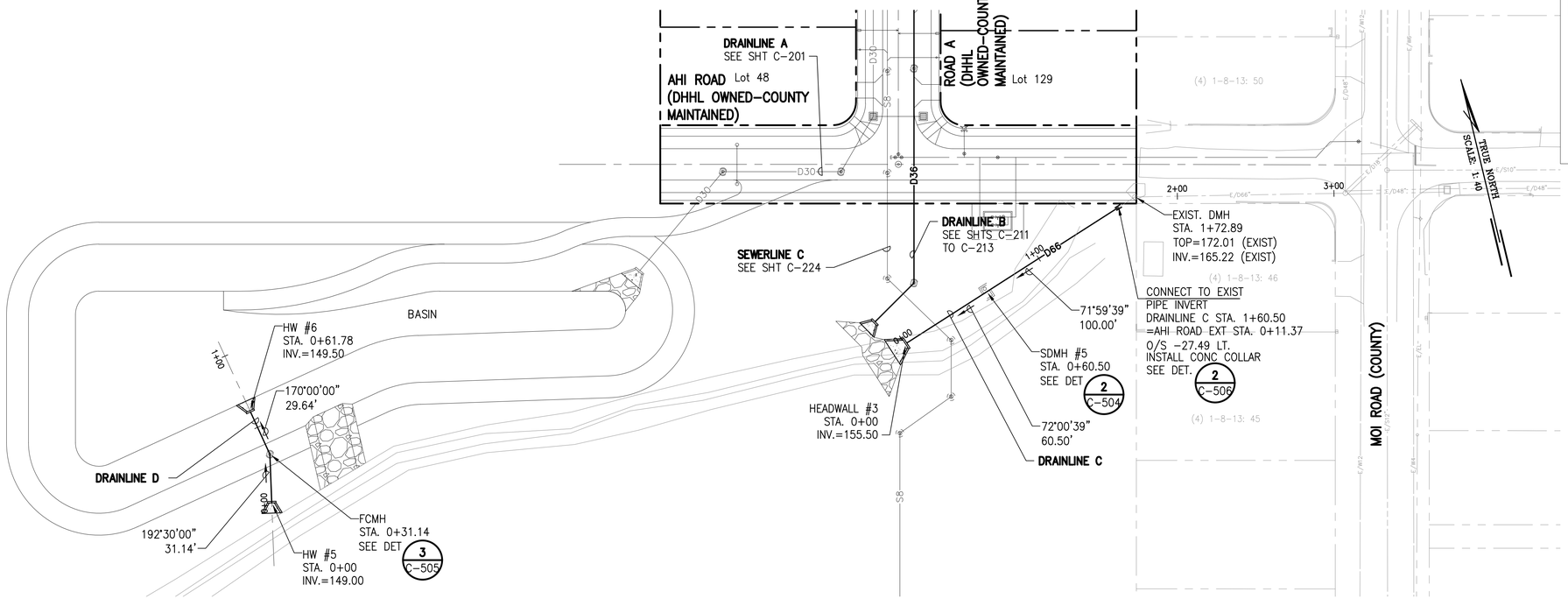

PLAN – DRAINLINE C AND D PLAN AND PROFILE

SCALE: 1" = 40'

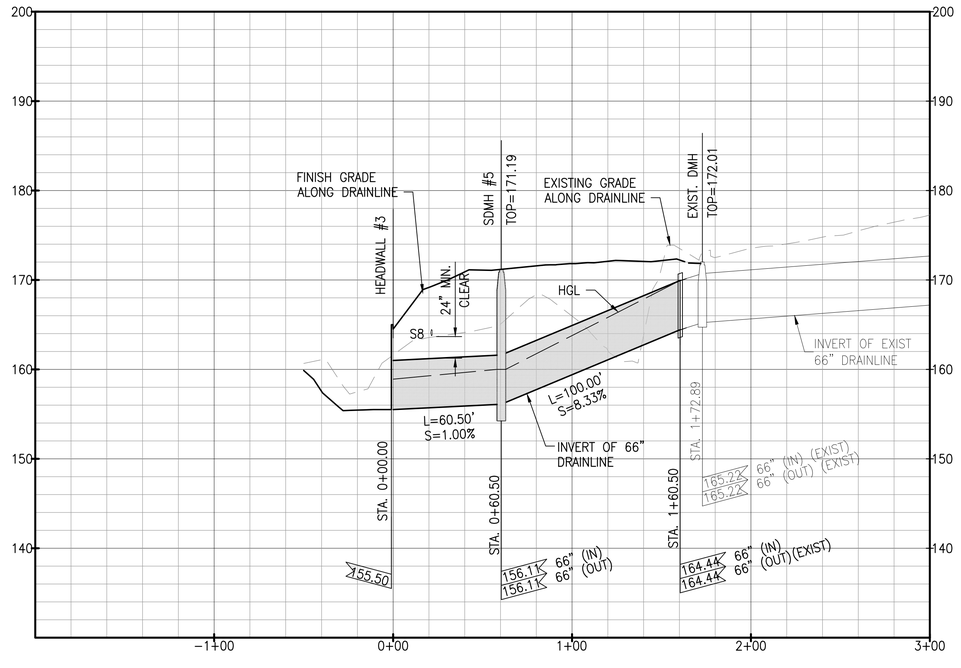

PROFILE – DRAINLINE C PROFILE

SCALE: HORIZ 1" = 40'
VERT 1" = 8'

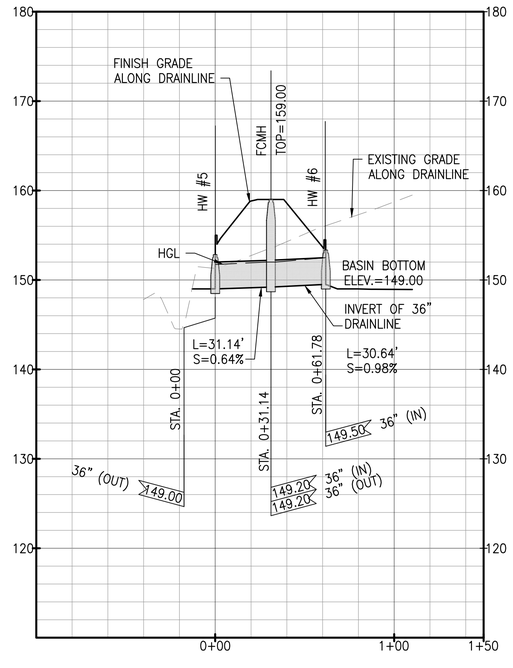

PROFILE – DRAINLINE D PROFILE

SCALE: HORIZ 1" = 40'
VERT 1" = 8'

NOTES:

1. FOR ROADWAY TYPICAL SECTIONS, SEE SHEET C-105.
2. FOR WATERLINE PLAN AND PROFILE, SEE SHEETS C-231 TO C-235.
3. FOR SEWERLINE PLAN AND PROFILE, SEE SHEETS C-221 TO C-226.
4. FOR BASIN PLAN AND PROFILE, SEE SHEET C-215.
5. FOR DRAIN LATERAL PROFILES, SEE SHEET C-216 TO C-217.

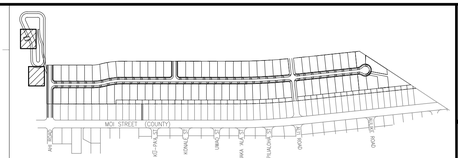

KEY PLAN

NOT TO SCALE

LEGEND:

- PROPERTY LINE
- LOT LINE
- D36 — DRAINLINE
- S8 — SEWERLINE
- W8 — WATERLINE
- GRATED DRAIN INLET (GDI), SEE DET 1 C-504
- STORM DRAIN MANHOLE (SDMH), SEE DET 2 C-505
- SEWER MANHOLE (SMH)
- FIRE HYDRANT

GRAPHIC SCALE:

40' 20' 0 40' 80'
SCALE: 1" = 40'

8' 0 8' 16'
SCALE: 1" = 8'

RICHARD Y. SANTO
LICENSED PROFESSIONAL ENGINEER
NO. 8955-C
HAWAII USA

This work was prepared by me or under my supervision and is the property of SSFM International, Inc. and may not be used in whole or in part without the written consent of SSFM International, Inc. Unauthorized use is prohibited. (Chapter 464, Hawaii Revised Statutes, Professional Engineers, Architects, Surveyors, and Landscape Architects)

4/30/24
Date of Signature

NOTE: Contractor to check and verify dimensions at job before proceeding with work.

SSFM International, Inc.
501 Sumner Street
Suite 620
Honolulu, Hawaii 96817

REVISION	DATE	DESCRIPTION	MADE BY	APPROVED

PROJECT:
DEPARTMENT OF HAWAIIAN HOME LANDS
SITE AND INFRASTRUCTURE IMPROVEMENTS
FOR HANAPĒPĒ RESIDENTIAL LOTS, PHASE 2
TMK: (4) 1-8-007: 003 (PORTION) & (4) 2-8-007: 001 TO 050 (PORTION)
Hanapēpē, Waimea, Kaua'i, Hawai'i

DRAINLINE C AND D PLAN AND PROFILE

THIS DOCUMENT CONTAINS INFORMATION PROPRIETARY TO SSFM INTERNATIONAL, INC., AND IS FURNISHED IN CONFIDENCE FOR THE LIMITED PURPOSE OF EVALUATION, BIDDING OR REVIEW. THIS DOCUMENT OR ITS CONTENTS MAY NOT BE USED FOR ANY OTHER PURPOSE AND MAY NOT BE REPRODUCED OR ADDED TO OTHERS WITHOUT THE PRIOR WRITTEN CONSENT OF SSFM INTERNATIONAL, INC.

DATE
NOVEMBER 2022

SHEET NUMBER
C-214
45 OF 109 SHEETS

W:_CIVIL 3D PROJECTS\2018_021.001 DHHL HANAPEPE RESIDENTIAL SUBDIVISION PHASE 2\01 CE DWG\C-214 DRAINLINE C AND D PLAN AND PROFILE.DWG 11/14/2022 9:54 AM BBROWN

PRINTED: 11/14/22

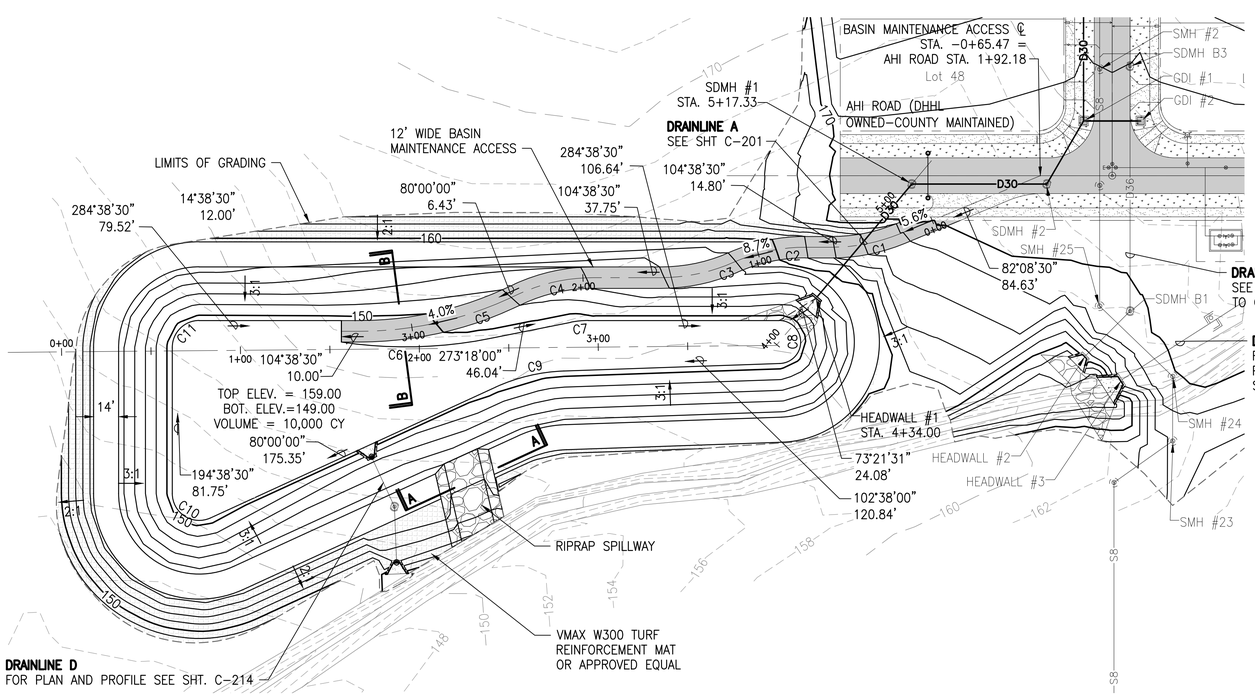

PLAN – BASIN
SCALE: 1" = 40'

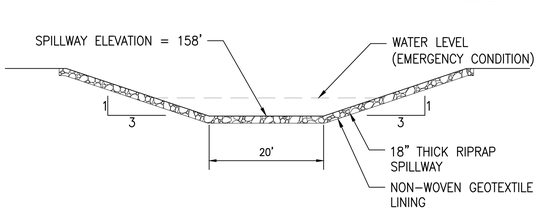

SECTION A–A
NOT TO SCALE

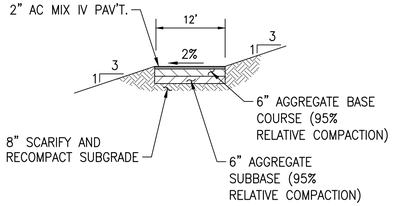

SECTION B–B
NOT TO SCALE

CURVE TABLE					
CURVE #	LENGTH	RADIUS	TANGENT	DELTA	DELTA/2
C1	39.27'	100.00'	19.89'	022°30'00"	11°15'00"
C2	41.53'	100.00'	21.07'	023°47'39"	11°53'49"
C3	41.53'	100.00'	21.07'	023°47'39"	11°53'49"
C4	43.01'	100.00'	21.84'	024°38'30"	12°19'15"
C5	86.02'	200.00'	43.68'	024°38'30"	12°19'15"
C6	83.48'	240.00'	42.16'	019°55'42"	09°57'51"
C7	9.90'	50.00'	4.96'	011°20'30"	05°40'15"
C8	37.28'	12.00'	684.63'	177°59'30"	88°59'45"
C9	39.50'	100.00'	20.01'	022°38'00"	11°19'00"
C10	30.01'	15.00'	23.38'	114°38'30"	57°19'15"
C11	23.56'	15.00'	15.00'	090°00'00"	45°00'00"

CONTOUR ELEV.	AREA		DEPTH INTERVAL	INCREMENTAL VOLUME		CUMULATIVE VOLUME	
FT	SF	SY	FT	CF	CY	CF	CY
149	17,243	1,916	N/A	N/A		0	
150	20,436	2,271	1	18,839	698	18,839	698
151	23,242	2,582	1	21,839	809	40,678	1,507
152	26,156	2,906	1	24,699	915	65,377	2,421
153	29,236	3,248	1	27,696	1,026	93,073	3,447
154	32,479	3,609	1	30,857	1,143	123,930	4,590
155	35,624	3,958	1	34,051	1,261	157,981	5,851
156	38,809	4,312	1	37,216	1,378	195,197	7,230
157	42,035	4,671	1	40,422	1,497	235,619	8,727
158	45,304	5,034	1	43,670	1,617	279,289	10,344

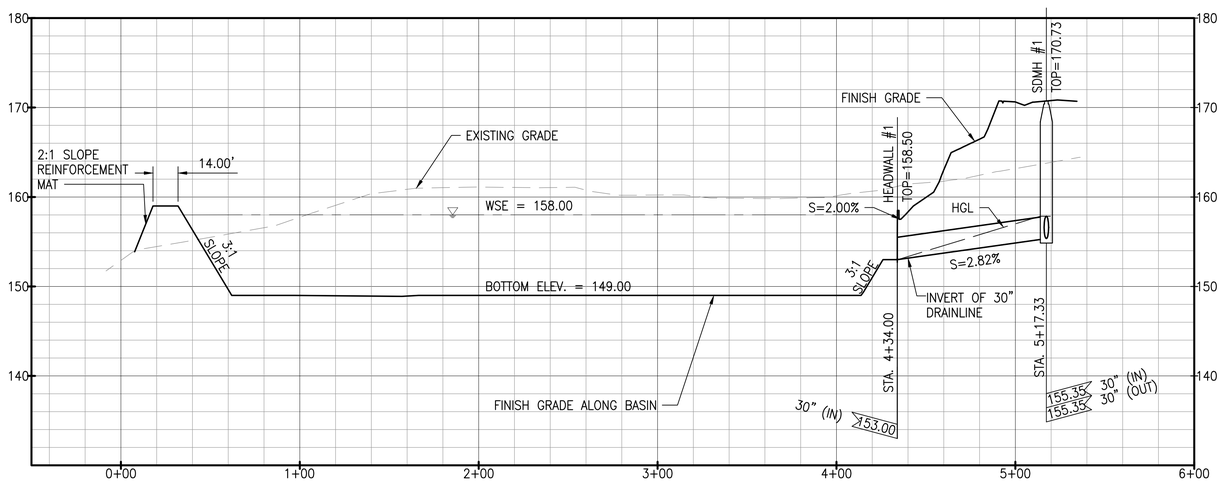

PROFILE – BASIN
SCALE: HORIZ 1" = 40'
VERT 1" = 8'

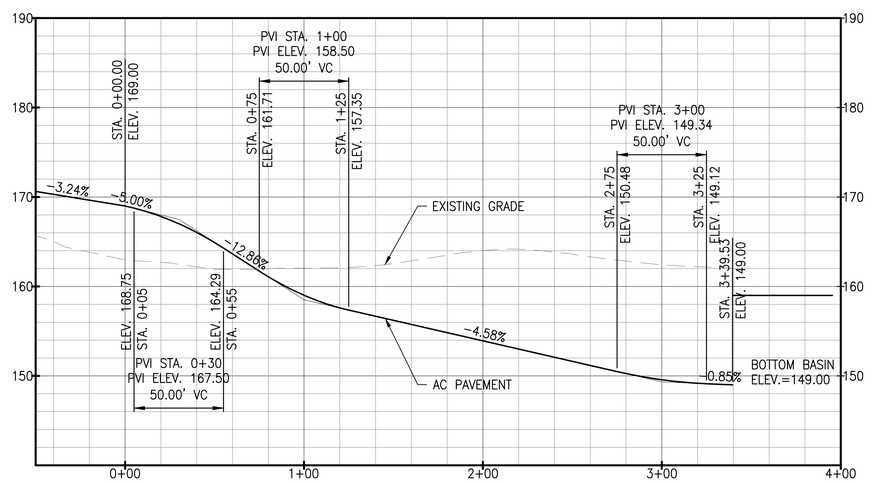

PROFILE – BASIN MAINTENANCE ACCESS
SCALE: HORIZ 1" = 40'
VERT 1" = 8'

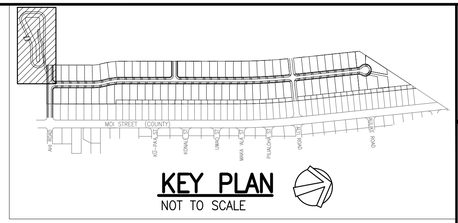

LEGEND:
- PROPERTY LINE
- LIMITS OF GRADING
- D36 — DRAINLINE
- S8 — SEWERLINE
- W8 — WATERLINE
- GRATED DRAIN INLET (GDI)
- STORM DRAIN MANHOLE (SDMH)
- SEWER MANHOLE (SMH)
- FIRE HYDRANT
- ASPHALTIC CONCRETE PAVEMENT
- CONCRETE PAVEMENT
- GRASS
- REINFORCEMENT MAT

GRAPHIC SCALES:
40' 20' 0 40' 80'
SCALE: 1" = 40'
8' 0 8' 16'
SCALE: 1" = 8'

RICHARD Y. SANTO
LICENSED PROFESSIONAL ENGINEER
NO. 8955–C
HAWAII USA

This work was prepared by me or under my supervision and is not to be used in whole or in part for any construction. Drawings, Specifications, Reports, Plans or Documents prepared by Engineers, Architects, Surveyors, and Landscape Architects) 4/30/24
Signature Date
NOTE: Contractor to check and verify dimensions at job before proceeding with work.

SSFM International, Inc.
501 Sumner Street
Suite 620
Honolulu, Hawaii 96817

REVISION	DATE	DESCRIPTION	MADE BY	APPROVED

PROJECT:
DEPARTMENT OF HAWAIIAN HOME LANDS
SITE AND INFRASTRUCTURE IMPROVEMENTS
FOR HANAPĒPĒ RESIDENTIAL LOTS, PHASE 2
TMK: (4) 1-8-007: 003 (PORTION) & (4) 2-8-007: 001 TO 050 (PORTION)
Hanapēpē, Waimea, Kaua'i, Hawai'i

BASIN PLAN AND PROFILE

THIS DOCUMENT CONTAINS INFORMATION PROPRIETARY TO SSFM INTERNATIONAL, INC., AND IS FURNISHED IN CONFIDENCE FOR THE LIMITED PURPOSE OF EVALUATION, BIDDING OR REVIEW. THIS DOCUMENT OR ITS CONTENTS MAY NOT BE USED FOR ANY OTHER PURPOSE AND MAY NOT BE DISCLOSED OR LOANED TO OTHERS WITHOUT THE PRIOR WRITTEN CONSENT OF SSFM INTERNATIONAL, INC.

DATE
NOVEMBER 2022

SHEET NUMBER
C-215
46 OF 109 SHEETS

PRINTED: 11/14/22

W:_CIVIL 3D PROJECTS\2018_021.001 DHHL HANAPEPE RESIDENTIAL SUBDIVISION PHASE 2\01 CE DWG\C-215 BASIN PLAN AND PROFILE.DWG 11/11/2022 8:44 AM BBROWN

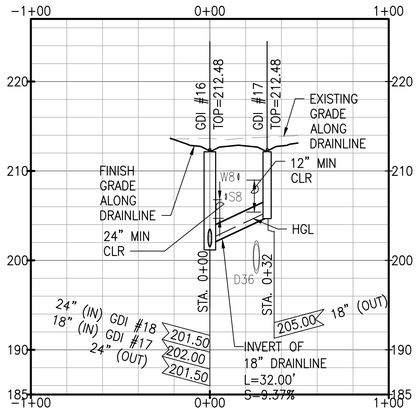

ROAD A – ℄ STA. 11+58±
PROFILE – DL-A7

SCALE: HORIZ 1" = 40'
VERT 1" = 8'

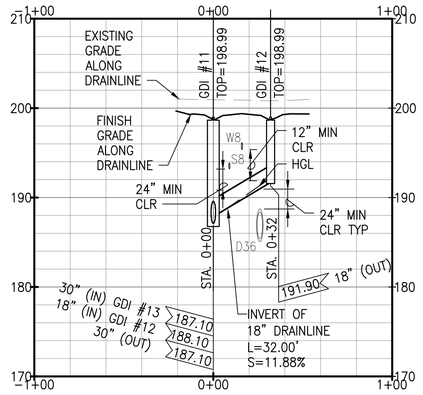

ROAD A – ℄ STA. 7+42±
PROFILE – DL-A5

SCALE: HORIZ 1" = 40'
VERT 1" = 8'

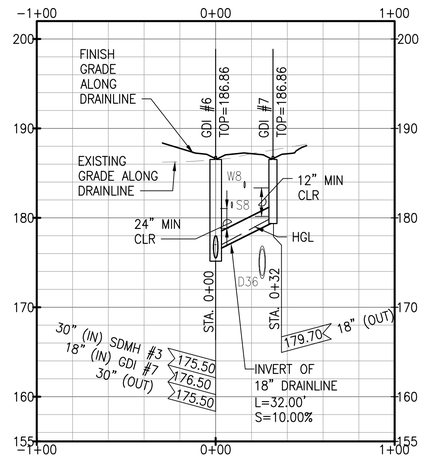

ROAD A – ℄ STA. 4+39±
PROFILE – DL-A3

SCALE: HORIZ 1" = 40'
VERT 1" = 8'

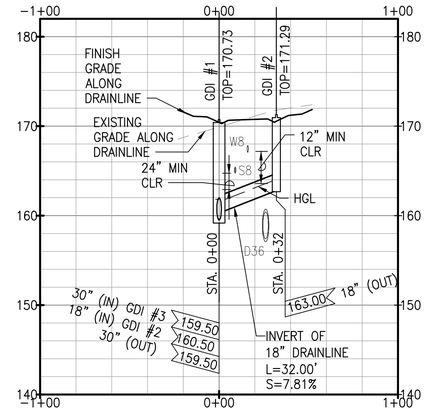

ROAD A – ℄ STA. 0+30±
PROFILE – DL-A1

SCALE: HORIZ 1" = 40'
VERT 1" = 8'

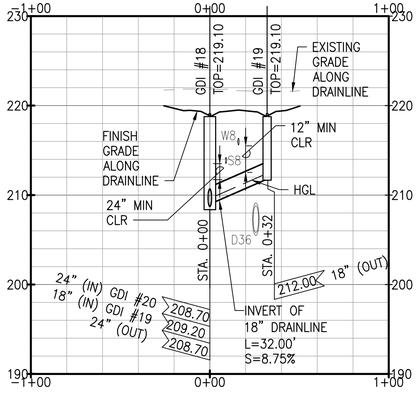

ROAD A – ℄ STA. 14+10±
PROFILE – DL-A8

SCALE: HORIZ 1" = 40'
VERT 1" = 8'

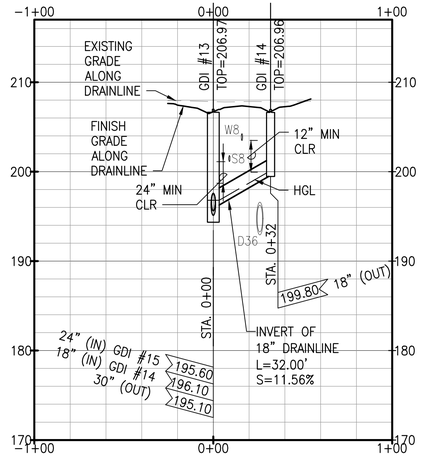

ROAD A – ℄ STA. 9+50±
PROFILE – DL-A6

SCALE: HORIZ 1" = 40'
VERT 1" = 8'

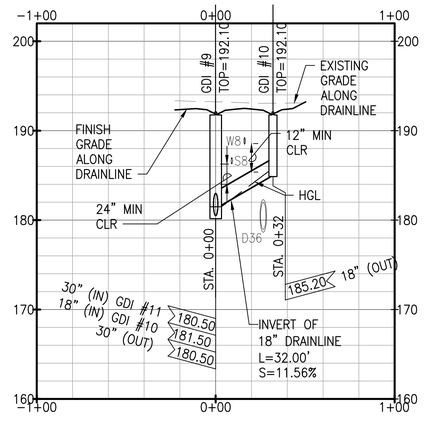

ROAD A – ℄ STA. 5+70±
PROFILE – DL-A4

SCALE: HORIZ 1" = 40'
VERT 1" = 8'

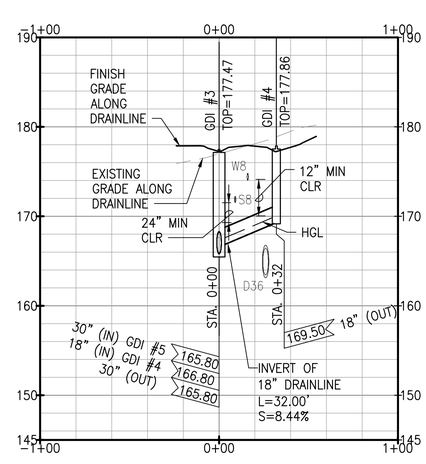

ROAD A – ℄ STA. 2+05±
PROFILE – DL-A2

SCALE: HORIZ 1" = 40'
VERT 1" = 8'

GRAPHIC SCALE:

40' 20' 0 40' 80'
SCALE: 1" = 40'

8' 0 8' 16'
SCALE: 1" = 8'

RICHARD Y. SANTO
LICENSED PROFESSIONAL ENGINEER
NO. 8955-C
HAWAII USA

This work was prepared by me or under my supervision for use on the project described herein and not for any other project. Date: 4/30/24 Registered Professional Engineer, Architect, Surveyor, and Landscape Architect(s) Signature

4/30/24
My license renewal date is April 30, 2024
of the State

NOTE: Contractor to check and verify dimensions at job before proceeding with work.

SSFM International
SSFM International, Inc.
501 Sumner Street
Suite 620
Honolulu, Hawaii 96817

REVISION	DATE	DESCRIPTION	MADE BY	APPROVED

PROJECT:
DEPARTMENT OF HAWAIIAN HOME LANDS
SITE AND INFRASTRUCTURE IMPROVEMENTS
FOR HANAPĒPĒ RESIDENTIAL LOTS, PHASE 2
TMK: (4) 1-8-007: 003 (PORTION) & (4) 2-8-007: 001 TO 050 (PORTION)
Hanapēpē, Waimea, Kaua'i, Hawai'i

DRAIN LATERAL PROFILES - 1

THIS DOCUMENT CONTAINS INFORMATION PROPRIETARY TO SSFM INTERNATIONAL, INC., AND IS FURNISHED IN CONFIDENCE FOR THE LIMITED PURPOSE OF EVALUATION, BIDDING OR REVIEW. THIS DOCUMENT OR ITS CONTENTS MAY NOT BE USED FOR ANY OTHER PURPOSE AND MAY NOT BE REPRODUCED, ADAPTED OR DISCLOSED TO OTHERS WITHOUT THE PRIOR WRITTEN CONSENT OF SSFM INTERNATIONAL, INC.

DATE
NOVEMBER 2022

SHEET NUMBER
C-216
47 OF 109 SHEETS

W:_CIVIL 3D PROJECTS\2018_021.001 DHHL HANAPEPE RESIDENTIAL SUBDIVISION PHASE 2\01 CE DWG\C-216 DRAIN LATERAL PROFILES.DWG 11/11/2022 8:46 AM BBROWN

PRINTED: 11/11/22

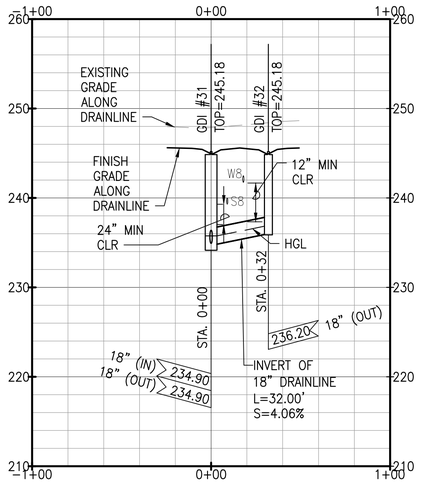

ROAD A – ℄ STA. 24+00±
PROFILE – DL-A13

SCALE: HORIZ 1" = 40'
VERT 1" = 8'

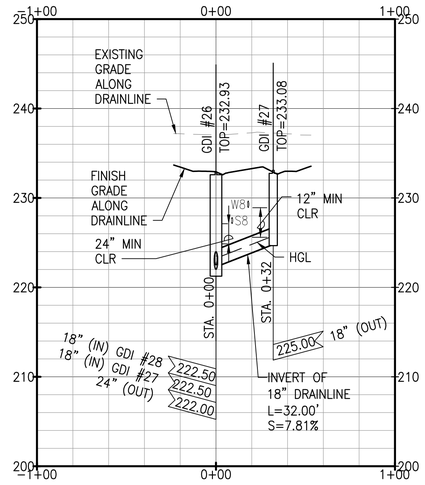

ROAD A – ℄ STA. 19+32±
PROFILE – DL-A11

SCALE: HORIZ 1" = 40'
VERT 1" = 8'

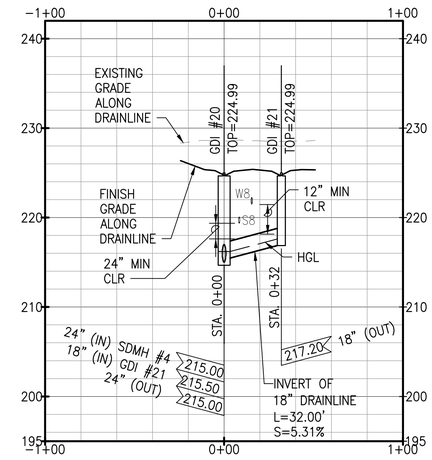

ROAD A – ℄ STA. 16+33±
PROFILE – DL-A9

SCALE: HORIZ 1" = 40'
VERT 1" = 8'

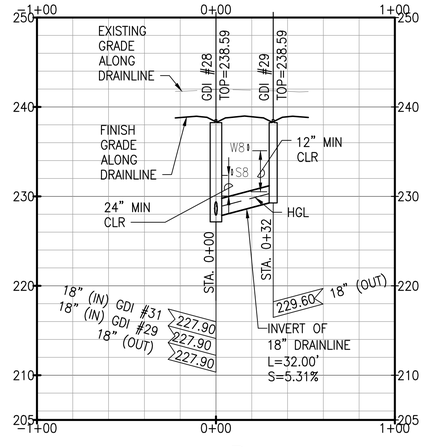

ROAD A – ℄ STA. 21+49±
PROFILE – DL-A12

SCALE: HORIZ 1" = 40'
VERT 1" = 8'

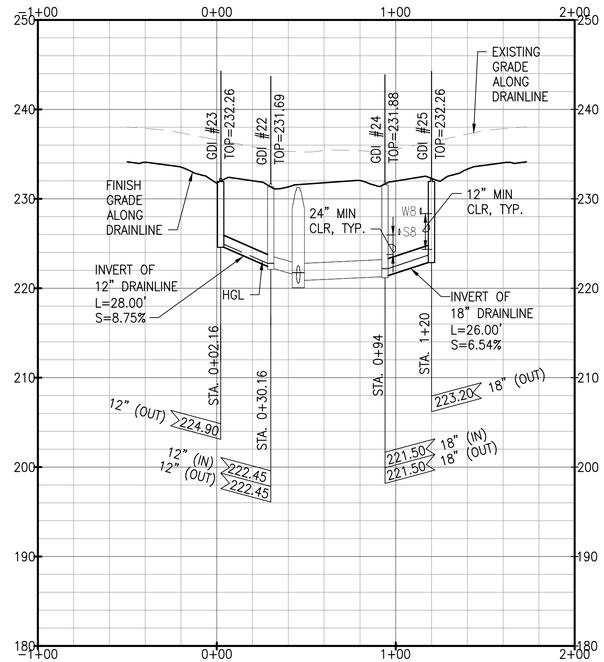

ROAD A – ℄ STA. 19+00±
PROFILE – DL-A10

SCALE: HORIZ 1" = 40'
VERT 1" = 8'

GRAPHIC SCALE:

40' 20' 0 40' 80'
SCALE: 1" = 40'

8' 0 8' 16'
SCALE: 1" = 8'

RICHARD Y. SANTO
LICENSED PROFESSIONAL ENGINEER
NO. 8955-C
HAWAII USA

This work was prepared by me or under my supervision and I am licensed to practice engineering in the State of Hawaii. (Chapter 464, Hawaii Revised Statutes, Professional Engineers, Architects, Surveyors, and Landscape Architects)

4/30/24
Date of Signature

NOTE: Contractor to check and verify dimensions at job before proceeding with work.

SSFM International
SSFM International, Inc.
501 Sumner Street
Suite 620
Honolulu, Hawaii 96817

REVISION	DATE	DESCRIPTION	MADE BY	APPROVED

PROJECT:
DEPARTMENT OF HAWAIIAN HOME LANDS
SITE AND INFRASTRUCTURE IMPROVEMENTS
FOR HANAPĒPĒ RESIDENTIAL LOTS, PHASE 2
TMK: (4) 1-8-007: 003 (PORTION) & (4) 2-8-007: 001 TO 050 (PORTION)
Hanapēpē, Waimea, Kaua'i, Hawai'i

DRAIN LATERAL PROFILES - 2

THIS DOCUMENT CONTAINS INFORMATION PROPRIETARY TO SSFM INTERNATIONAL, INC., AND IS FURNISHED IN CONFIDENCE FOR THE LIMITED PURPOSE OF EVALUATION, BIDDING OR REVIEW. THIS DOCUMENT OR ITS CONTENTS MAY NOT BE USED FOR ANY OTHER PURPOSE AND MAY NOT BE PROVIDED OR DISCLOSED TO OTHERS WITHOUT THE PRIOR WRITTEN CONSENT OF SSFM INTERNATIONAL, INC.

DATE
NOVEMBER 2022

SHEET NUMBER
C-217
48 OF 109 SHEETS

W:_CIVIL 3D PROJECTS\2018_021.001 DHHL HANAPEPE RESIDENTIAL SUBDIVISION PHASE 2\01 CE DWG\C-217 DRAIN LATERAL PROFILES.DWG 11/8/2022 6:13 PM EBORNALES

PRINTED: 11/10/22

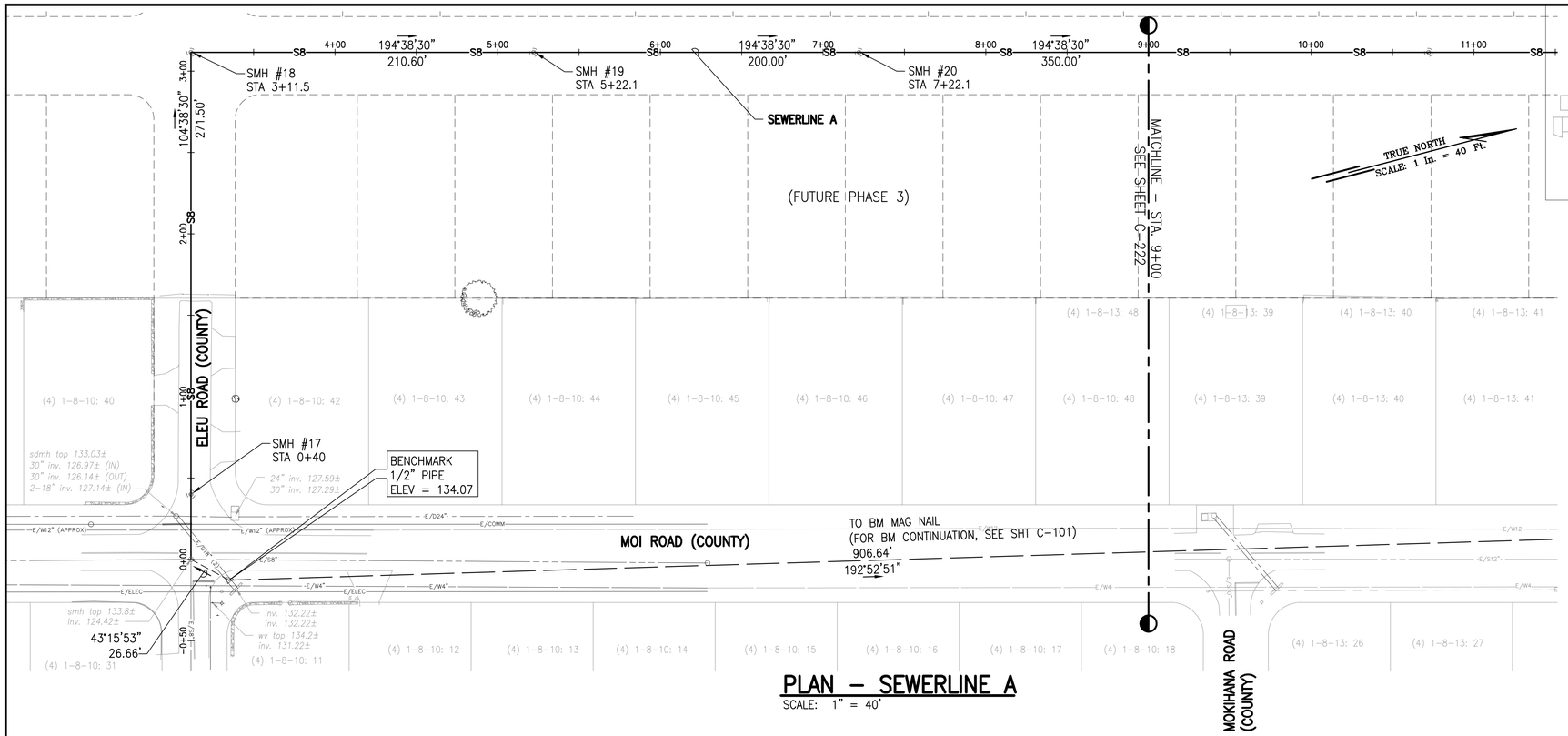

PLAN – SEWERLINE A

SCALE: 1" = 40'

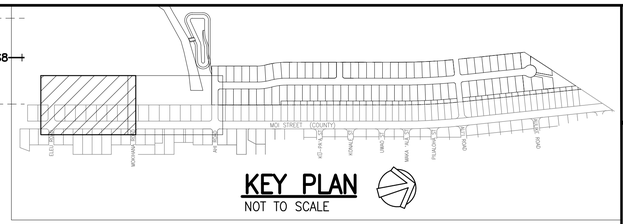

LEGEND:

- PROPERTY LINE
- LOT LINE
- S8 — SEWERLINE
- SEWER MANHOLE (SMH), SEE DET. 1/C-507

NOTE:

1. FOR TYPICAL UTILITY SECTION FUTURE ROAD, SEE SHEET C-105.

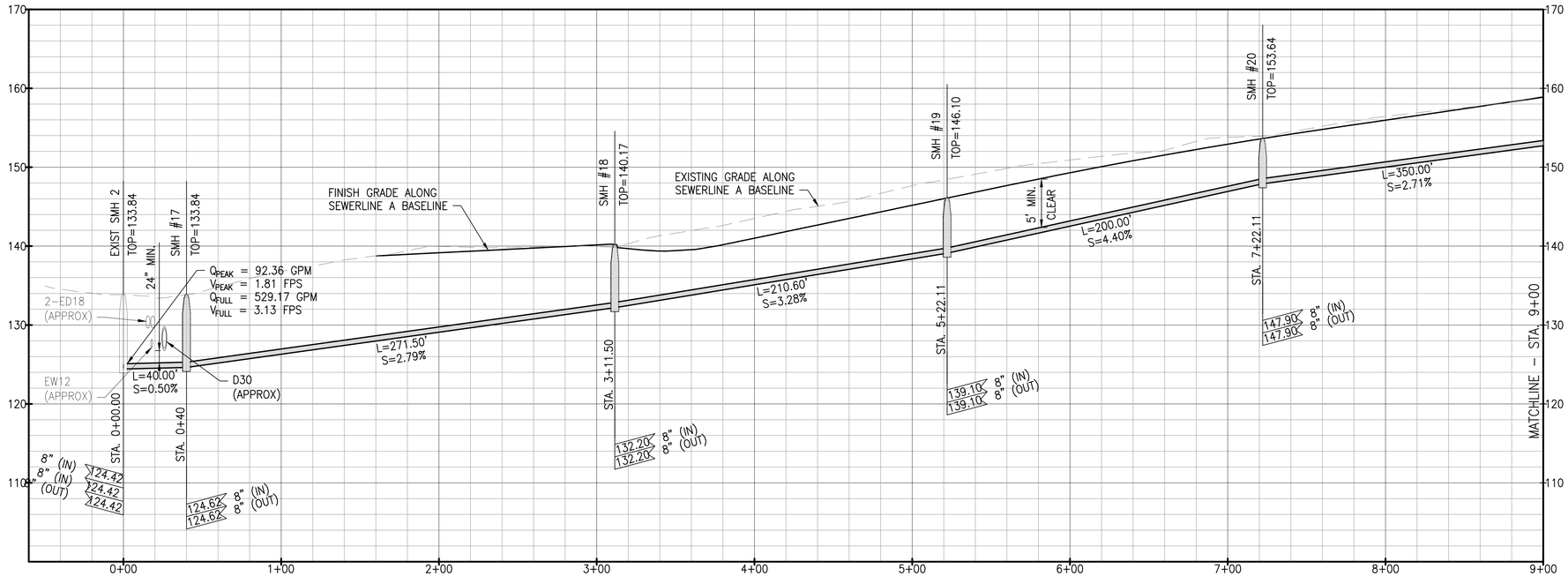

PROFILE – SEWERLINE A

SCALE: HORIZ 1" = 40'
VERT 1" = 8'

GRAPHIC SCALE:

40' 20' 0 40' 80'
SCALE: 1" = 40'

8' 0 8' 16'
SCALE: 1" = 8'

RICHARD Y. SANTO
LICENSED PROFESSIONAL ENGINEER
NO. 8955-C
HAWAII USA

This work was prepared by me or under my supervision for the exclusive use of the client named herein and shall not be reused in whole or in part without the written permission of SSFM International, Inc. Unauthorized reuse shall be at the user's sole risk and without liability to SSFM International, Inc. 4/30/24
Professional Engineer, Architect, Surveyor, and Landscape Architect
Signature
Date
of the State

NOTE: Contractor to check and verify dimensions at job before proceeding with work.

SSFM International, Inc.
501 Sumner Street
Suite 620
Honolulu, Hawaii 96817

REVISION	DATE	DESCRIPTION	MADE BY	APPROVED

PROJECT:
DEPARTMENT OF HAWAIIAN HOME LANDS
SITE AND INFRASTRUCTURE IMPROVEMENTS
FOR HANAPĒPĒ RESIDENTIAL LOTS, PHASE 2
TMK: (4) 1-8-007: 003 (PORTION) & (4) 2-8-007: 001 TO 050 (PORTION)
Hanapēpē, Waimea, Kaua'i, Hawai'i

SEWERLINE A PLAN AND PROFILE - 1

THIS DOCUMENT CONTAINS INFORMATION PROPRIETARY TO SSFM INTERNATIONAL, INC., AND IS FURNISHED IN CONFIDENCE FOR THE LIMITED PURPOSE OF EVALUATION, BIDDING OR REVIEW. THIS DOCUMENT OR ITS CONTENTS MAY NOT BE USED FOR ANY OTHER PURPOSE AND MAY NOT BE REPRODUCED OR DISCLOSED TO OTHERS WITHOUT THE PRIOR WRITTEN CONSENT OF SSFM INTERNATIONAL, INC.

DATE
NOVEMBER 2022

SHEET NUMBER
C-221
49 OF 109 SHEETS

W:_CIVIL 3D PROJECTS\2018_021.001 DHHL HANAPEPE RESIDENTIAL SUBDIVISION PHASE 2\01 CE DWGS\C-221 - C-222 SEWERLINE A PLAN AND PROFILE.DWG 11/8/2022 5:20 PM EBORNALES

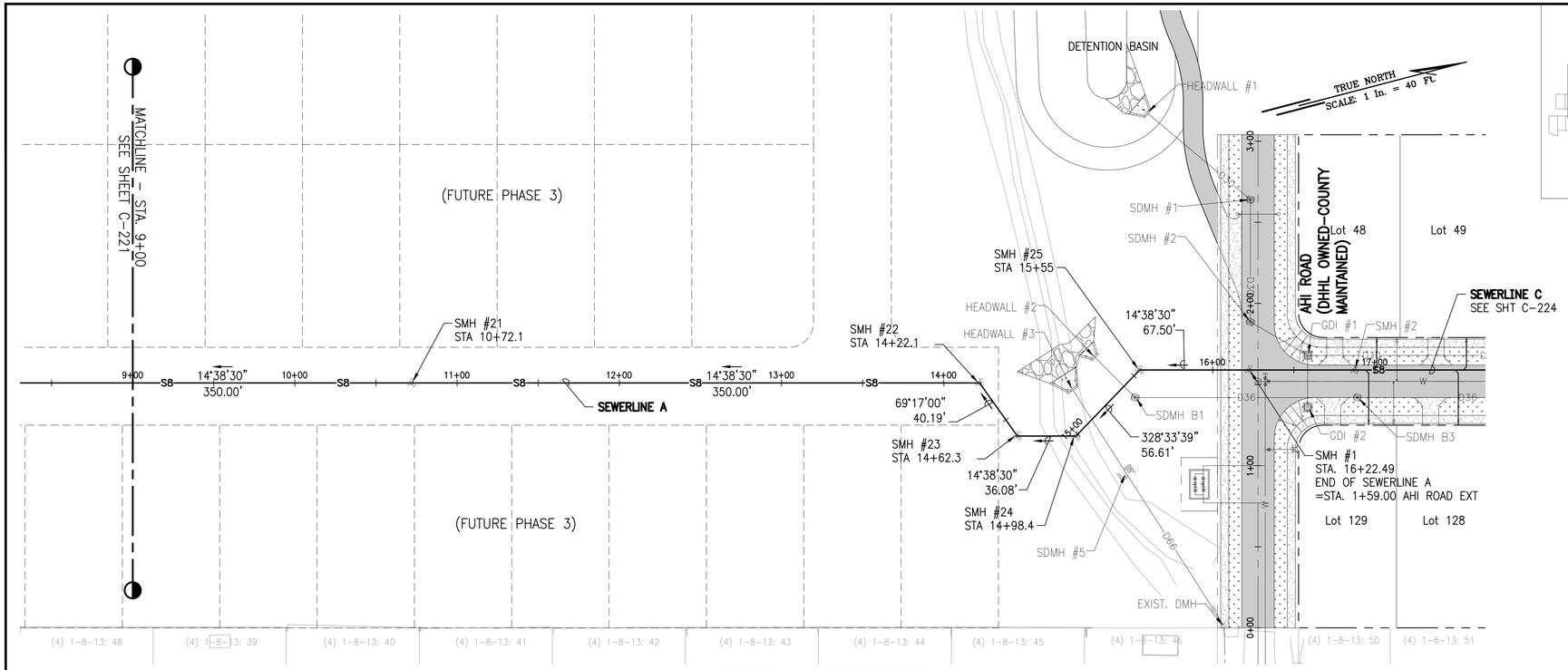

PLAN – SEWERLINE A

SCALE: 1" = 40'

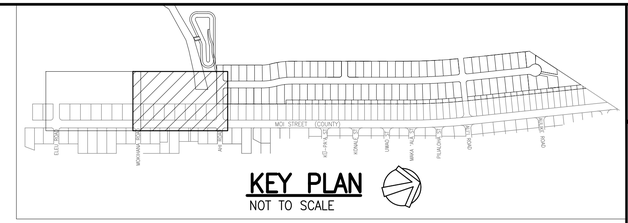

LEGEND:

- PROPERTY LINE
- LOT LINE
- S8 — SEWERLINE
- SEWER MANHOLE (SMH), SEE DET. 1/C-507

NOTE:

1. FOR TYPICAL UTILITY SECTION FUTURE ROAD, SEE SHEET C-105.

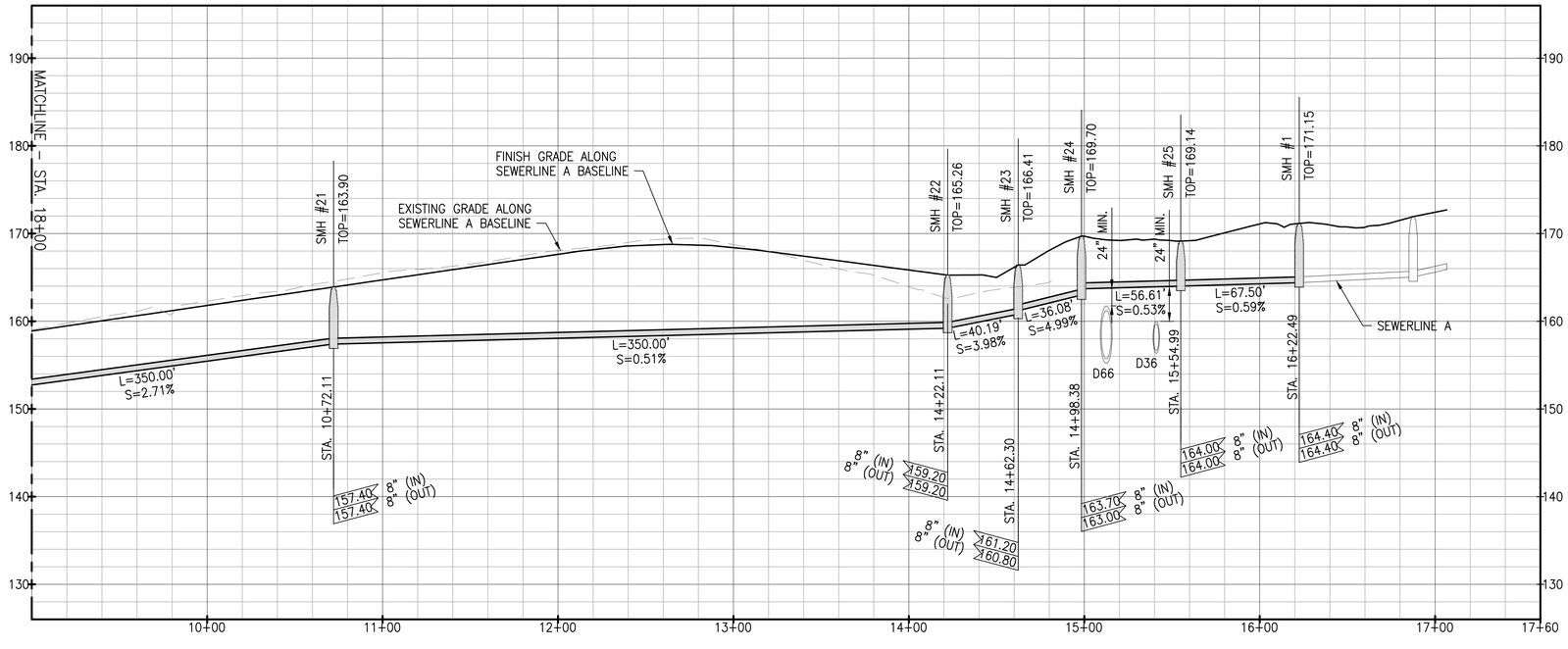

PROFILE – SEWERLINE A

SCALE: HORIZ 1" = 40'
VERT 1" = 8'

GRAPHIC SCALE:

40' 20' 0 40' 80'
SCALE: 1" = 40'

8' 0 8' 16'
SCALE: 1" = 8'

RICHARD Y. SANTO
LICENSED PROFESSIONAL ENGINEER
NO. 8955-C
HAWAII USA

This work was prepared by me or under my supervision for the exclusive use of SSFM International, Inc. and its clients. Unauthorized use of this work product for other projects is prohibited. (Errors, omissions, or misinterpretations resulting from unauthorized use of this work product are the responsibility of the party making such unauthorized use.)

4/30/24
Date of Signature

NOTE: Contractor to check and verify dimensions at job before proceeding with work.

SSFM International, Inc.
501 Sumner Street
Suite 620
Honolulu, Hawaii 96817

REVISION	DATE	DESCRIPTION	MADE BY	APPROVED

PROJECT:
DEPARTMENT OF HAWAIIAN HOME LANDS
SITE AND INFRASTRUCTURE IMPROVEMENTS
FOR HANAPĒPĒ RESIDENTIAL LOTS, PHASE 2
TMK: (4) 1-8-007: 003 (PORTION) & (4) 2-8-007: 001 TO 050 (PORTION)
Hanapēpē, Waimea, Kaua'i, Hawai'i

SEWERLINE A PLAN AND PROFILE - 2

THIS DOCUMENT CONTAINS INFORMATION PROPRIETARY TO SSFM INTERNATIONAL, INC., AND IS FURNISHED IN CONFIDENCE FOR THE LIMITED PURPOSE OF EVALUATION, BIDDING OR REVIEW. THIS DOCUMENT OR ITS CONTENTS MAY NOT BE USED FOR ANY OTHER PURPOSE AND MAY NOT BE REPRODUCED OR DISCLOSED TO OTHERS WITHOUT THE PRIOR WRITTEN CONSENT OF SSFM INTERNATIONAL, INC.

DATE
NOVEMBER 2022

SHEET NUMBER
C-222
50 OF 109 SHEETS

W:_CIVIL 3D PROJECTS\2018_021.001 DHHL HANAPEPE RESIDENTIAL SUBDIVISION PHASE 2\01 CE DWG\C-221 - C-222 SEWERLINE A PLAN AND PROFILE.DWG 11/10/2022 3:36 PM EBORNALES

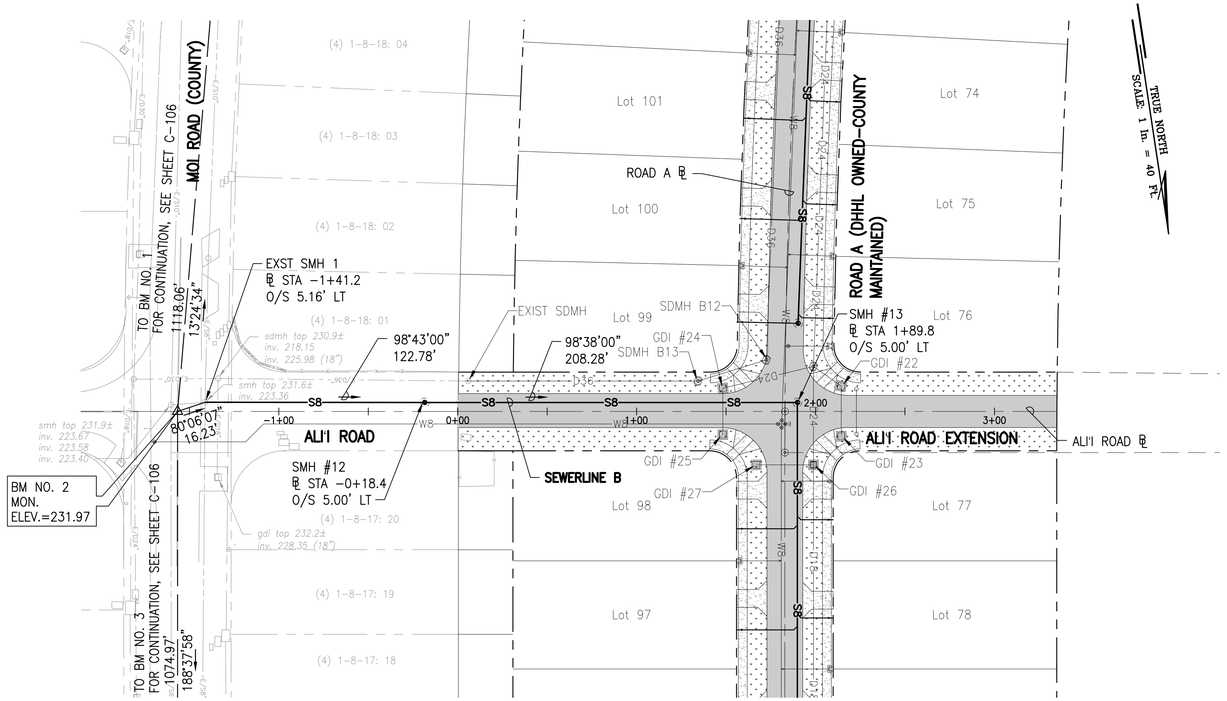

PLAN – SEWERLINE B

SCALE: 1" = 40'

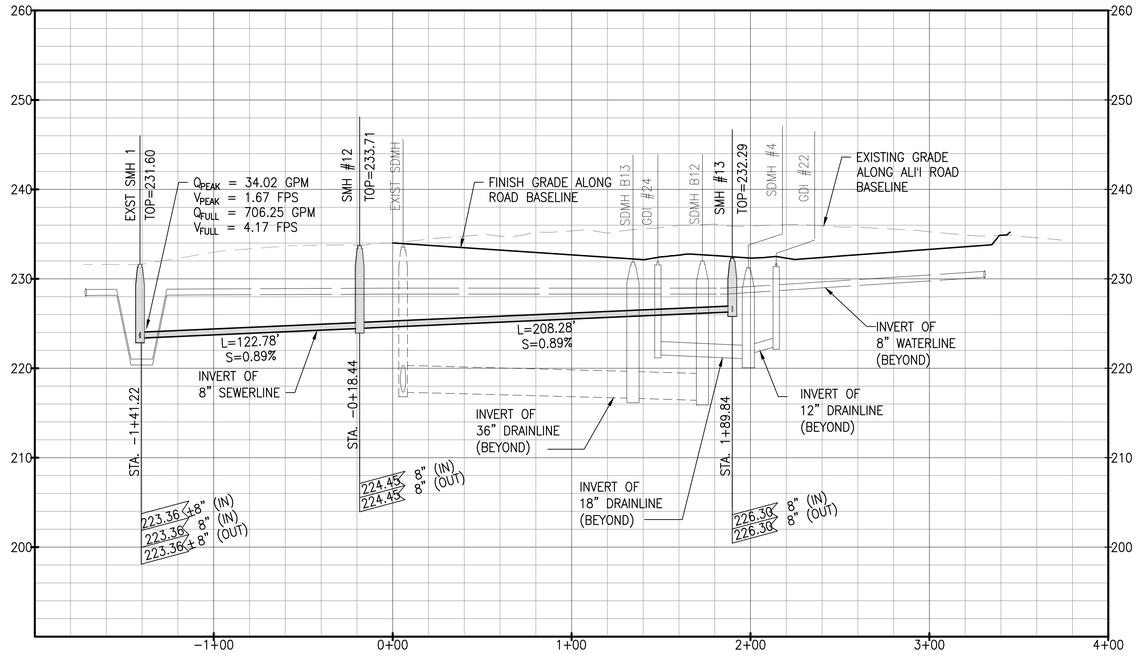

PROFILE – SEWERLINE B

SCALE: HORIZ 1" = 40'
VERT 1" = 8'

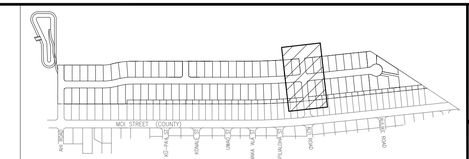

KEY PLAN

NOT TO SCALE

LEGEND:

- PROPERTY LINE
- LOT LINE
- D36 — DRAINLINE
- S8 — SEWERLINE
- W8 — WATERLINE
- GRATED DRAIN INLET (GDI)
- STORM DRAIN MANHOLE (SDMH)
- SEWER MANHOLE (SMH), SEE DET. 1/C-507
- FIRE HYDRANT
- ASPHALTIC CONCRETE PAVEMENT
- CONCRETE PAVEMENT
- GRASS

NOTES:

1. FOR ROADWAY TYPICAL SECTIONS, SEE SHEET C-105.
2. FOR WATERLINE PLAN AND PROFILE, SEE SHEETS C-231 TO C-235.
3. FOR DRAINLINE B PLAN AND PROFILE, SEE SHEETS C-211 TO C-214.
4. FOR BASIN PLAN AND PROFILE, SEE SHEET C-215.
5. FOR DRAIN LATERAL PROFILES, SEE SHEET C-216 TO C-217.

GRAPHIC SCALE:

40' 20' 0 40' 80'
SCALE: 1" = 40'

8' 0 8' 16'
SCALE: 1" = 8'

RICHARD Y. SANTO
LICENSED PROFESSIONAL ENGINEER
NO. 8955-C
HAWAII USA

This work was prepared by me or under my supervision and I certify that to the best of my knowledge and belief, the design is in accordance with the applicable standard of care and practice normally exercised by licensed professional engineers in the same profession and locality at this time and place.

4/30/24
Date of Signature

NOTE: Contractor to check and verify dimensions at job before proceeding with work.

SSFM International, Inc.
501 Sumner Street
Suite 620
Honolulu, Hawaii 96817

REVISION	DATE	DESCRIPTION	MADE BY	APPROVED

PROJECT:
DEPARTMENT OF HAWAIIAN HOME LANDS
SITE AND INFRASTRUCTURE IMPROVEMENTS
FOR HANAPĒPĒ RESIDENTIAL LOTS, PHASE 2
TMK: (4) 1-8-007: 003 (PORTION) & (4) 2-8-007: 001 TO 050 (PORTION)
Hanapēpē, Waimea, Kaua'i, Hawai'i

SEWERLINE B PLAN AND PROFILE

THIS DOCUMENT CONTAINS INFORMATION PROPRIETARY TO SSFM INTERNATIONAL, INC., AND IS FURNISHED IN CONFIDENCE FOR THE LIMITED PURPOSE OF EVALUATION, BIDDING OR REVIEW. THIS DOCUMENT OR ITS CONTENTS MAY NOT BE USED FOR ANY OTHER PURPOSE AND MAY NOT BE REPRODUCED OR DISCLOSED TO OTHERS WITHOUT THE PRIOR WRITTEN CONSENT OF SSFM INTERNATIONAL, INC.

DATE
NOVEMBER 2022

SHEET NUMBER
C-223
51 OF 109 SHEETS

W:_CIVIL 3D PROJECTS\2018_021.001 DHHL HANAPEPE RESIDENTIAL SUBDIVISION PHASE 2\01 CE DWG\C-223 SEWERLINE B PLAN AND PROFILE.DWG 11/10/2022 3:51 PM EBORNALES

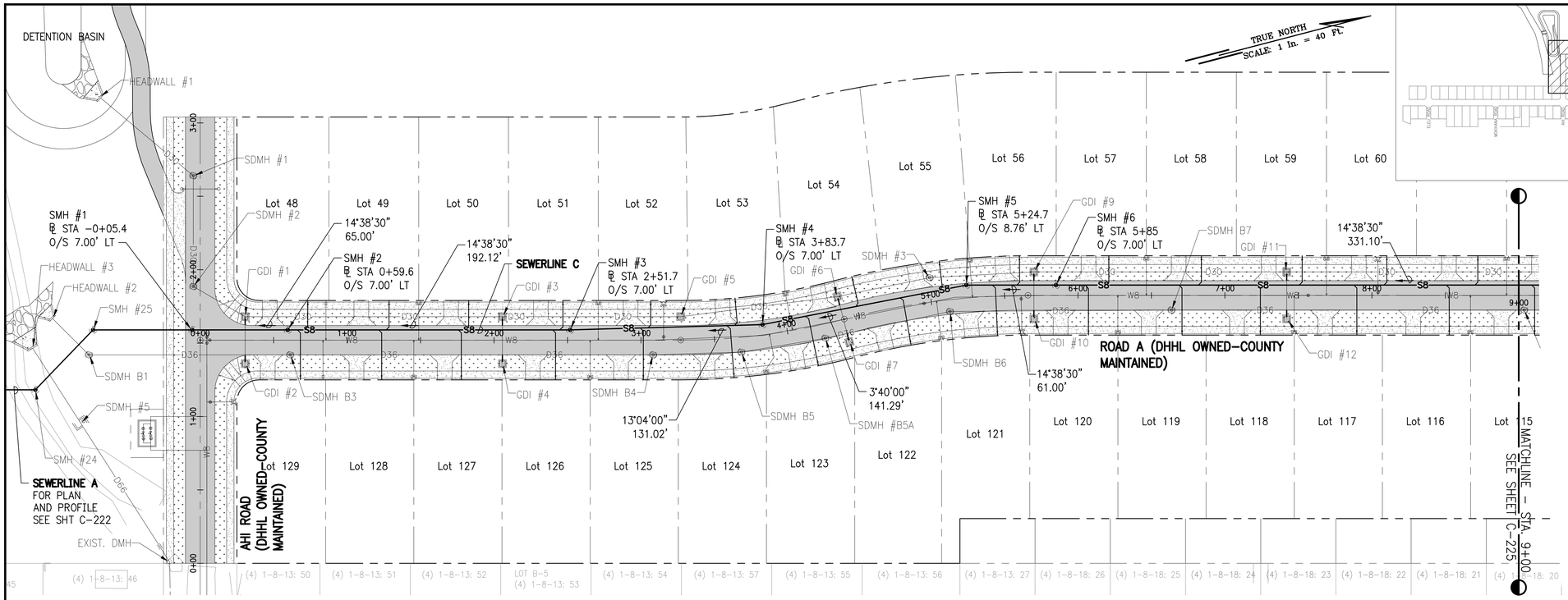

PLAN – SEWERLINE C

SCALE: 1" = 40'

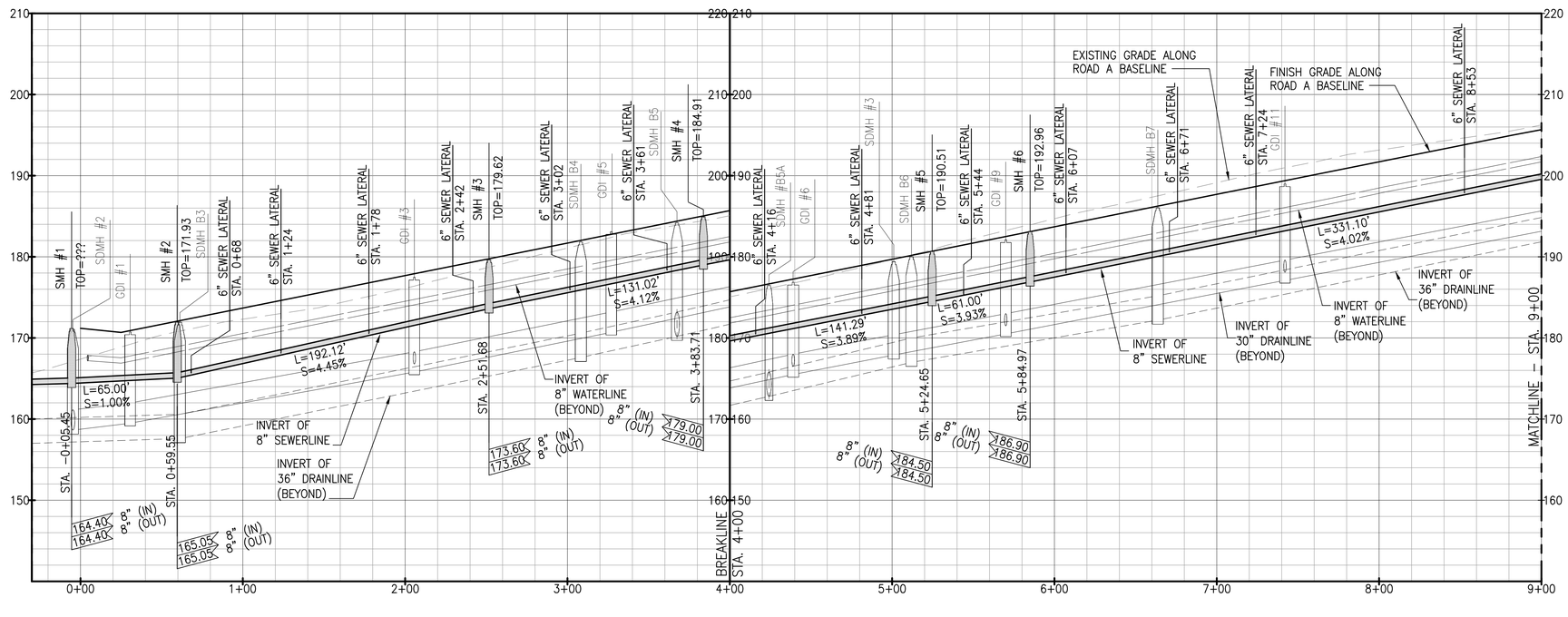

PROFILE – SEWERLINE C

SCALE: HORIZ 1" = 40'
VERT 1" = 8'

NOTES:

1. FOR ROADWAY TYPICAL SECTIONS, SEE SHEET C-105.
2. FOR WATERLINE PLAN AND PROFILE, SEE SHEETS C-231 TO C-235.
3. FOR DRAINLINE B PLAN AND PROFILE, SEE SHEETS C-211 TO C-214.
4. FOR BASIN PLAN AND PROFILE, SEE SHEET C-215.
5. FOR DRAIN LATERAL PROFILES, SEE SHEET C-216 TO C-217.

GRAPHIC SCALE:

40' 20' 0 40' 80'
SCALE: 1" = 40'

8' 0 8' 16'
SCALE: 1" = 8'

RICHARD Y. SANTO
LICENSED PROFESSIONAL ENGINEER
NO. 8955-C
HAWAII USA

This work was prepared by me or under my supervision and is the property of SSFM International, Inc. and may not be used in whole or in part for any other project without the written authorization of SSFM International, Inc.

4/30/24
Date of Signature

NOTE: Contractor to check and verify dimensions at job before proceeding with work.

SSFM International, Inc.
501 Sumner Street
Suite 620
Honolulu, Hawaii 96817

REVISION	DATE	DESCRIPTION	MADE BY	APPROVED

PROJECT:
DEPARTMENT OF HAWAIIAN HOME LANDS
SITE AND INFRASTRUCTURE IMPROVEMENTS
FOR HANAPĒPĒ RESIDENTIAL LOTS, PHASE 2
TMK: (4) 1-8-007: 003 (PORTION) & (4) 2-8-007: 001 TO 050 (PORTION)
Hanapēpē, Waimea, Kaua'i, Hawai'i

SEWERLINE C PLAN AND PROFILE - 1

THIS DOCUMENT CONTAINS INFORMATION PROPRIETARY TO SSFM INTERNATIONAL, INC., AND IS FURNISHED IN CONFIDENCE FOR THE LIMITED PURPOSE OF EVALUATION, BIDDING OR REVIEW. THIS DOCUMENT OR ITS CONTENTS MAY NOT BE USED FOR ANY OTHER PURPOSE AND MAY NOT BE REPRODUCED OR ADAPTED TO OTHERS WITHOUT THE PRIOR WRITTEN CONSENT OF SSFM INTERNATIONAL, INC.

DATE
NOVEMBER 2022

SHEET NUMBER
C-224
52 OF 109 SHEETS

W:_CIVIL 3D PROJECTS\2018_021.001 DHHL HANAPEPE RESIDENTIAL SUBDIVISION PHASE 2\01 CE DWG\C-224 - C-226 SEWERLINE C PLAN AND PROFILE.DWG 11/10/2022 6:48 PM EBORNALES

PRINTED: 11/10/22

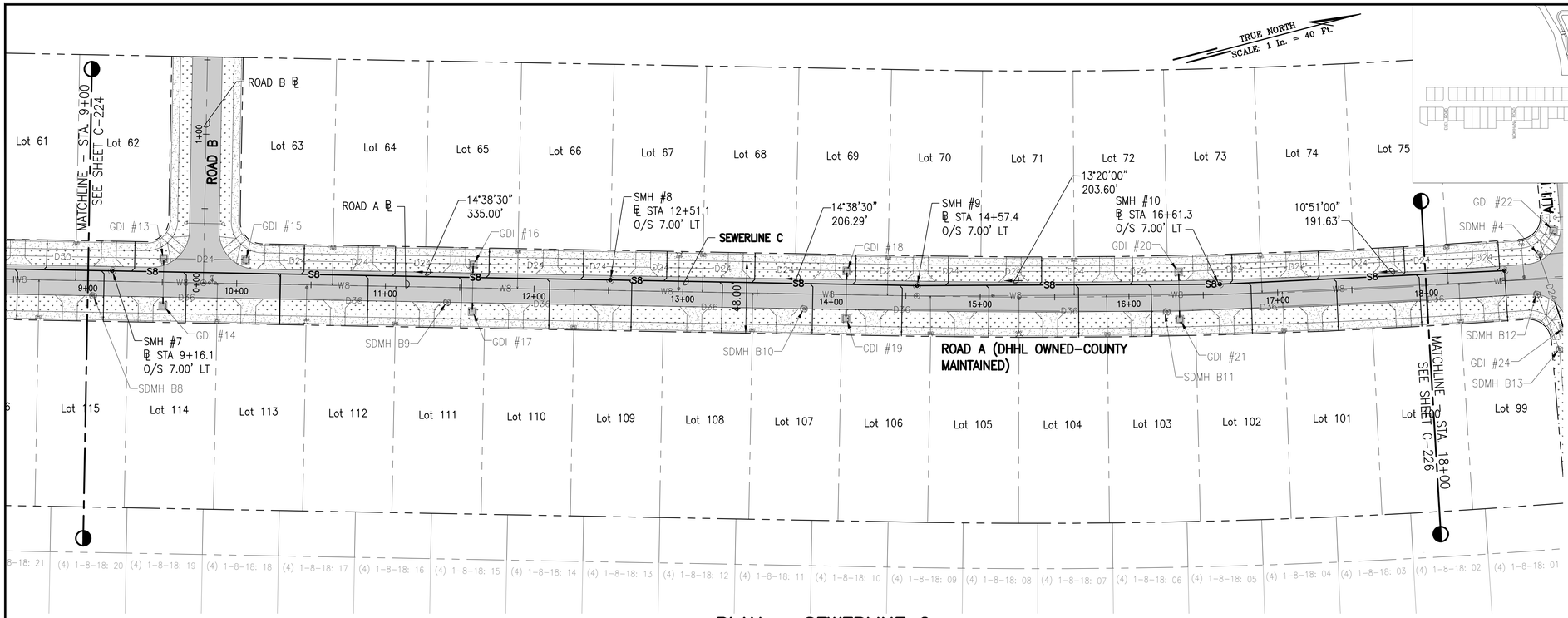

PLAN – SEWERLINE C

SCALE: 1" = 40'

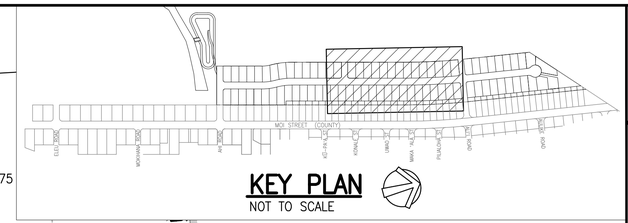

KEY PLAN

NOT TO SCALE

LEGEND:

- PROPERTY LINE
- LOT LINE
- D36 — DRAINLINE
- S8 — SEWERLINE
- W8 — WATERLINE
- GRATED DRAIN INLET (GDI)
- STORM DRAIN MANHOLE (SDMH)
- SEWER MANHOLE (SMH), SEE DETAIL 1/C-507
- FIRE HYDRANT
- ASPHALTIC CONCRETE PAVEMENT
- CONCRETE PAVEMENT
- GRASS

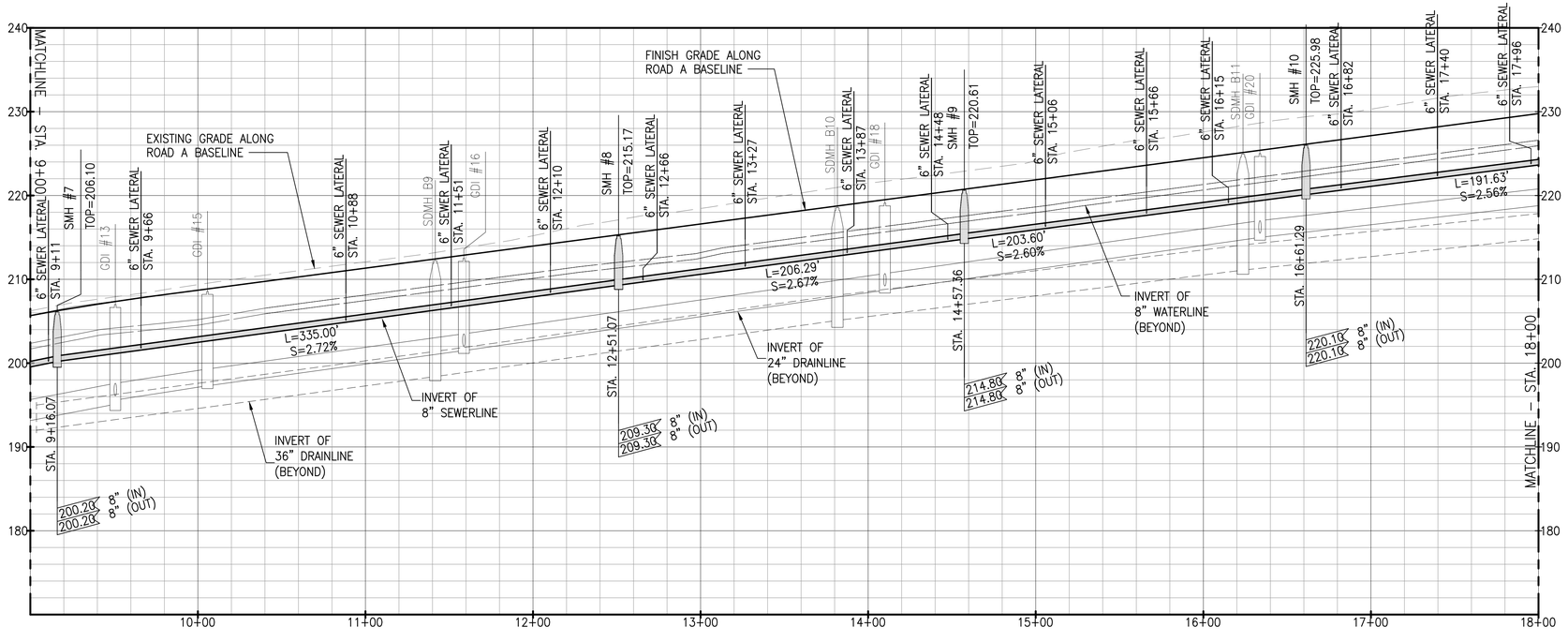

PROFILE – SEWERLINE C

SCALE: HORIZ 1" = 40'
VERT 1" = 8'

NOTES:

1. FOR ROADWAY TYPICAL SECTIONS, SEE SHEET C–105.
2. FOR WATERLINE PLAN AND PROFILE, SEE SHEETS C–231 TO C–235.
3. FOR DRAINLINE B PLAN AND PROFILE, SEE SHEETS C–211 TO C–214.
4. FOR BASIN PLAN AND PROFILE, SEE SHEET C–215.
5. FOR DRAIN LATERAL PROFILES, SEE SHEET C–216 TO C–217.

GRAPHIC SCALE:

40' 20' 0 40' 80'
SCALE: 1" = 40'

8' 0 8' 16'
SCALE: 1" = 8'

RICHARD Y. SANTO
LICENSED PROFESSIONAL ENGINEER
NO. 8955-C
HAWAII USA

This work was prepared by me or under my supervision for the exclusive use of SSFM International, Inc. and its clients. Unauthorized use of this work product for other projects, Professional Engineering Certification, Services, and additions is prohibited.

4/30/24
Registered Professional Engineer
State of Hawaii

NOTE: Contractor to check and verify dimensions at job before proceeding with work.

SSFM International, Inc.
501 Sumner Street
Suite 620
Honolulu, Hawaii 96817

REVISION	DATE	DESCRIPTION	MADE BY	APPROVED

PROJECT:
DEPARTMENT OF HAWAIIAN HOME LANDS
SITE AND INFRASTRUCTURE IMPROVEMENTS
FOR HANAPĒPĒ RESIDENTIAL LOTS, PHASE 2
TMK: (4) 1-8-007: 003 (PORTION) & (4) 2-8-007: 001 TO 050 (PORTION)
Hanapēpē, Waimea, Kaua'i, Hawai'i

SEWERLINE C PLAN AND PROFILE - 2

THIS DOCUMENT CONTAINS INFORMATION PROPRIETARY TO SSFM INTERNATIONAL, INC., AND IS FURNISHED IN CONFIDENCE FOR THE LIMITED PURPOSE OF EVALUATION, BIDDING OR REVIEW. THIS DOCUMENT OR ITS CONTENTS MAY NOT BE USED FOR ANY OTHER PURPOSE AND MAY NOT BE REPRODUCED OR DISCLOSED TO OTHERS WITHOUT THE PRIOR WRITTEN CONSENT OF SSFM INTERNATIONAL, INC.

DATE
NOVEMBER 2022

SHEET NUMBER
C-225
53 OF 109 SHEETS

PRINTED: 11/10/22

W:_CIVIL 3D PROJECTS\2018_021.001 DHHL HANAPEPE RESIDENTIAL SUBDIVISION PHASE 2\01 CE DWG\C-224 - C-226 SEWERLINE C PLAN AND PROFILE.DWG 11/10/2022 4:04 PM EBORNALES

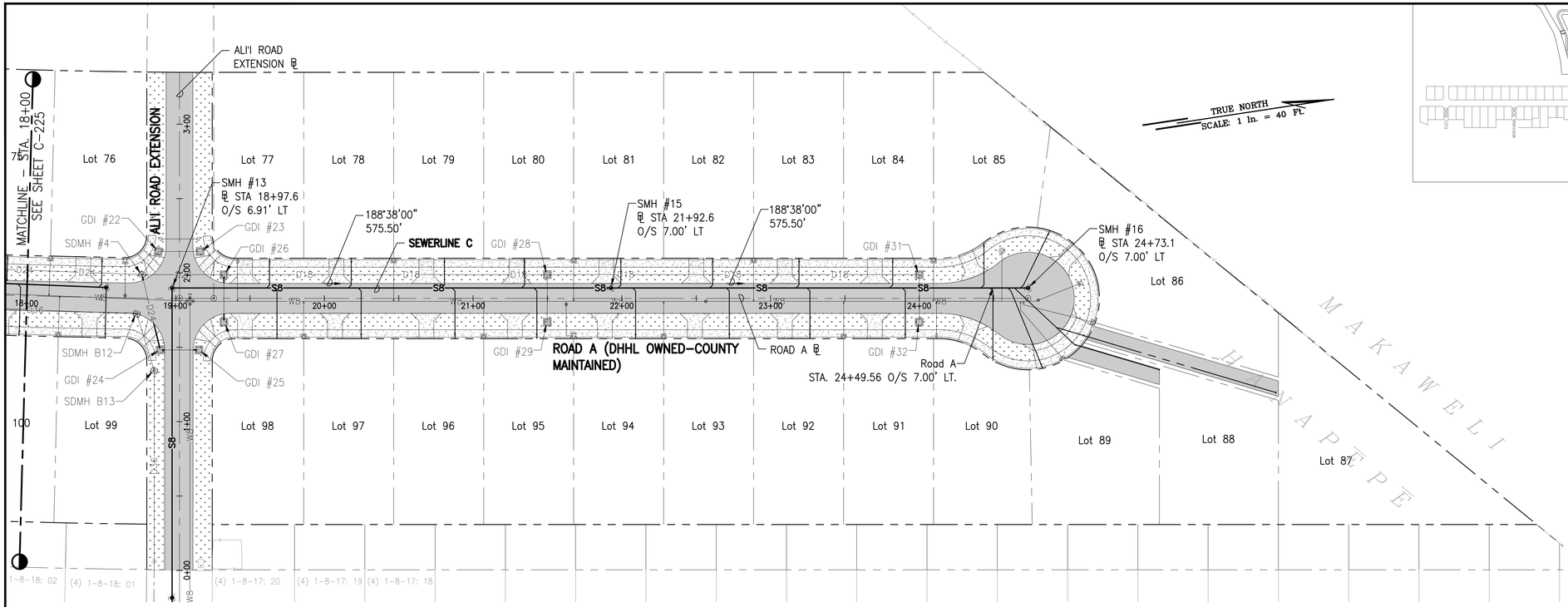

PLAN – SEWERLINE C

SCALE: 1" = 40'

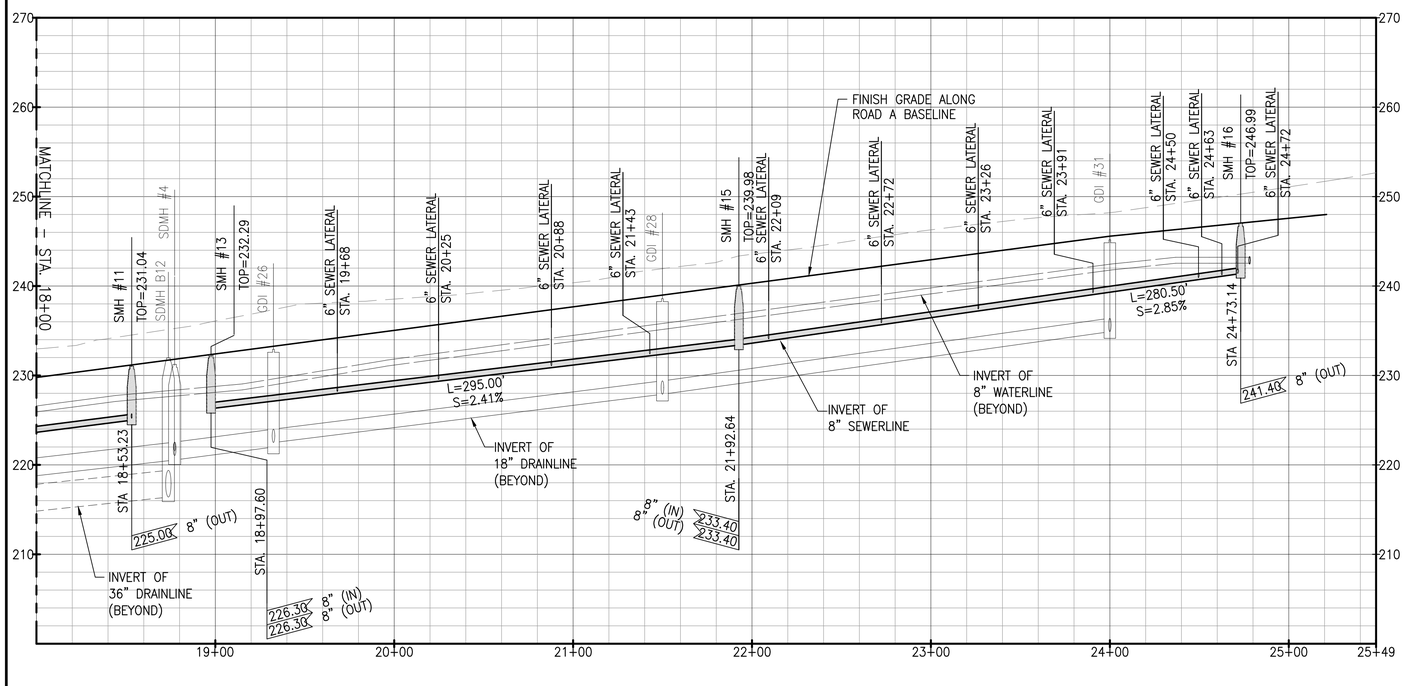

PROFILE – SEWERLINE C

SCALE: HORIZ 1" = 40'
VERT 1" = 8'

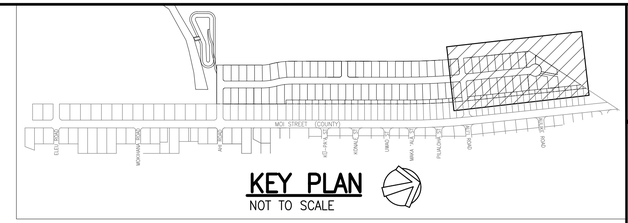

LEGEND:

- PROPERTY LINE
- LOT LINE
- D36 — DRAINLINE
- S8 — SEWERLINE
- W8 — WATERLINE
- GRATED DRAIN INLET (GDI)
- STORM DRAIN MANHOLE (SDMH)
- SEWER MANHOLE (SMH), SEE DETAIL 1/C-507
- FIRE HYDRANT
- ASPHALTIC CONCRETE PAVEMENT
- CONCRETE PAVEMENT
- GRASS

NOTES:

1. FOR ROADWAY TYPICAL SECTIONS, SEE SHEET C-105.
2. FOR WATERLINE PLAN AND PROFILE, SEE SHEETS C-231 TO C-235.
3. FOR DRAINLINE B PLAN AND PROFILE, SEE SHEETS C-211 TO C-214.
4. FOR BASIN PLAN AND PROFILE, SEE SHEET C-215.
5. FOR DRAIN LATERAL PROFILES, SEE SHEET C-216 TO C-217.

GRAPHIC SCALE:

40' 20' 0 40' 80'
SCALE: 1" = 40'

8' 0 8' 16'
SCALE: 1" = 8'

RICHARD Y. SANTO
LICENSED PROFESSIONAL ENGINEER
NO. 8955-C
HAWAII USA

This work was prepared by me or under my supervision and I am a duly licensed professional engineer under the laws of the State of Hawaii. Date of expiration: April 30, 2024. (Pursuant to Section 464-3, Hawaii Revised Statutes, Professional Engineers, Architects, Surveyors, and Landscape Architects)

4/30/24
Date

Signature

NOTE: Contractor to check and verify dimensions at job before proceeding with work.

SSFM International, Inc.
501 Sumner Street
Suite 620
Honolulu, Hawaii 96817

REVISION	DATE	DESCRIPTION	MADE BY	APPROVED

PROJECT:
DEPARTMENT OF HAWAIIAN HOME LANDS
SITE AND INFRASTRUCTURE IMPROVEMENTS
FOR HANAPĒPĒ RESIDENTIAL LOTS, PHASE 2
TMK: (4) 1-8-007: 003 (PORTION) & (4) 2-8-007: 001 TO 050 (PORTION)
Hanapēpē, Waimea, Kaua'i, Hawai'i

SEWERLINE C PLAN AND PROFILE - 3

THIS DOCUMENT CONTAINS INFORMATION PROPRIETARY TO SSFM INTERNATIONAL, INC., AND IS FURNISHED IN CONFIDENCE FOR THE LIMITED PURPOSE OF EVALUATION, BIDDING OR REVIEW. THIS DOCUMENT OR ITS CONTENTS MAY NOT BE USED FOR ANY OTHER PURPOSE AND MAY NOT BE REPRODUCED OR DISCLOSED TO OTHERS WITHOUT THE PRIOR WRITTEN CONSENT OF SSFM INTERNATIONAL, INC.

DATE
NOVEMBER 2022

SHEET NUMBER
C-226
54 OF 109 SHEETS

PRINTED: 11/10/22

W:_CIVIL 3D PROJECTS\2018_021.001 DHHL HANAPEPE RESIDENTIAL SUBDIVISION PHASE 2\01 CE DWG\C-224 - C-226 SEWERLINE C PLAN AND PROFILE.DWG 11/10/2022 4:20 PM EBORNALES

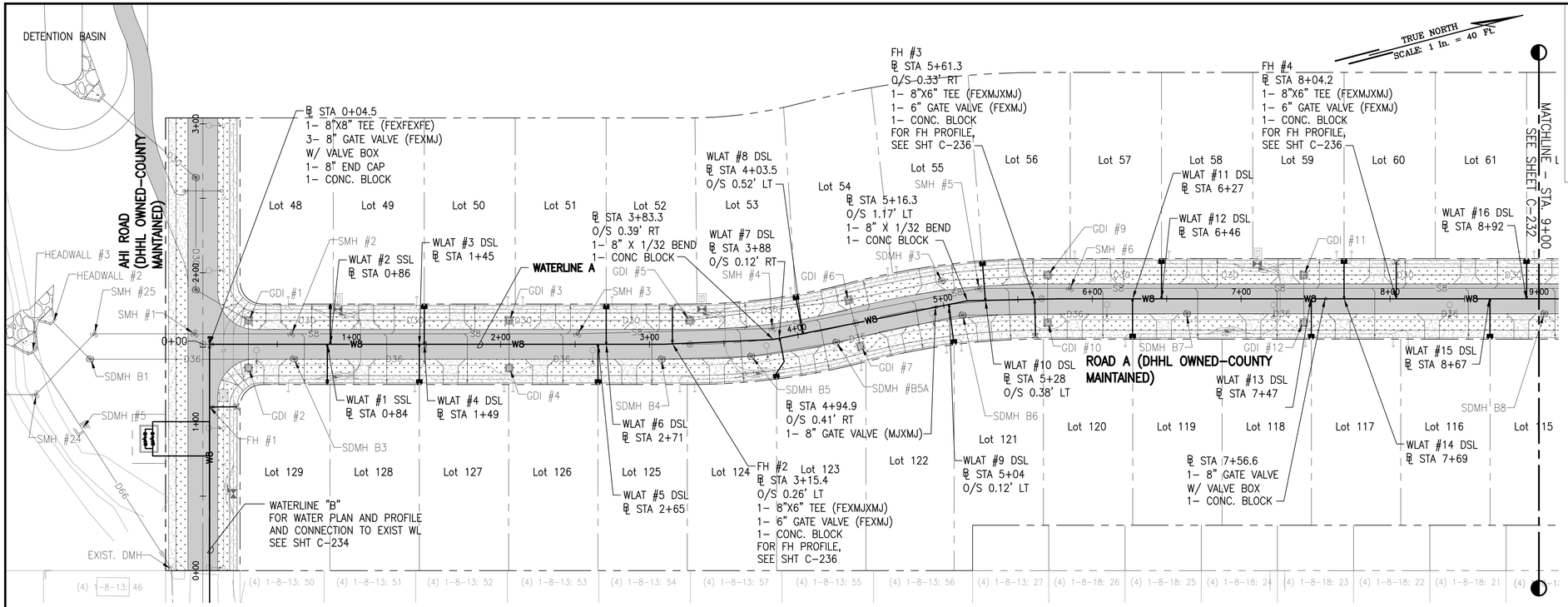

PLAN – WATERLINE A

SCALE: 1" = 40'

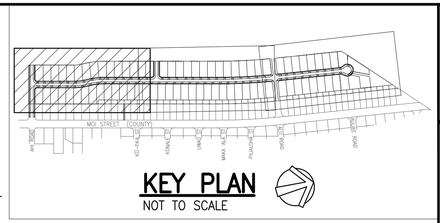

LEGEND:

- PROPERTY LINE
- LOT LINE
- D36 DRAINLINE
- S8 SEWERLINE
- W WATERLINE
- GRATED DRAIN INLET (GDI)
- STORM DRAIN MANHOLE (SDMH)
- SEWER MANHOLE (SMH)
- FIRE HYDRANT
- SINGLE SERVICE LATERAL (SSL)
- DOUBLE SERVICE LATERAL (DSL)
- ASPHALTIC CONCRETE PAVEMENT
- CONCRETE PAVEMENT
- GRASS

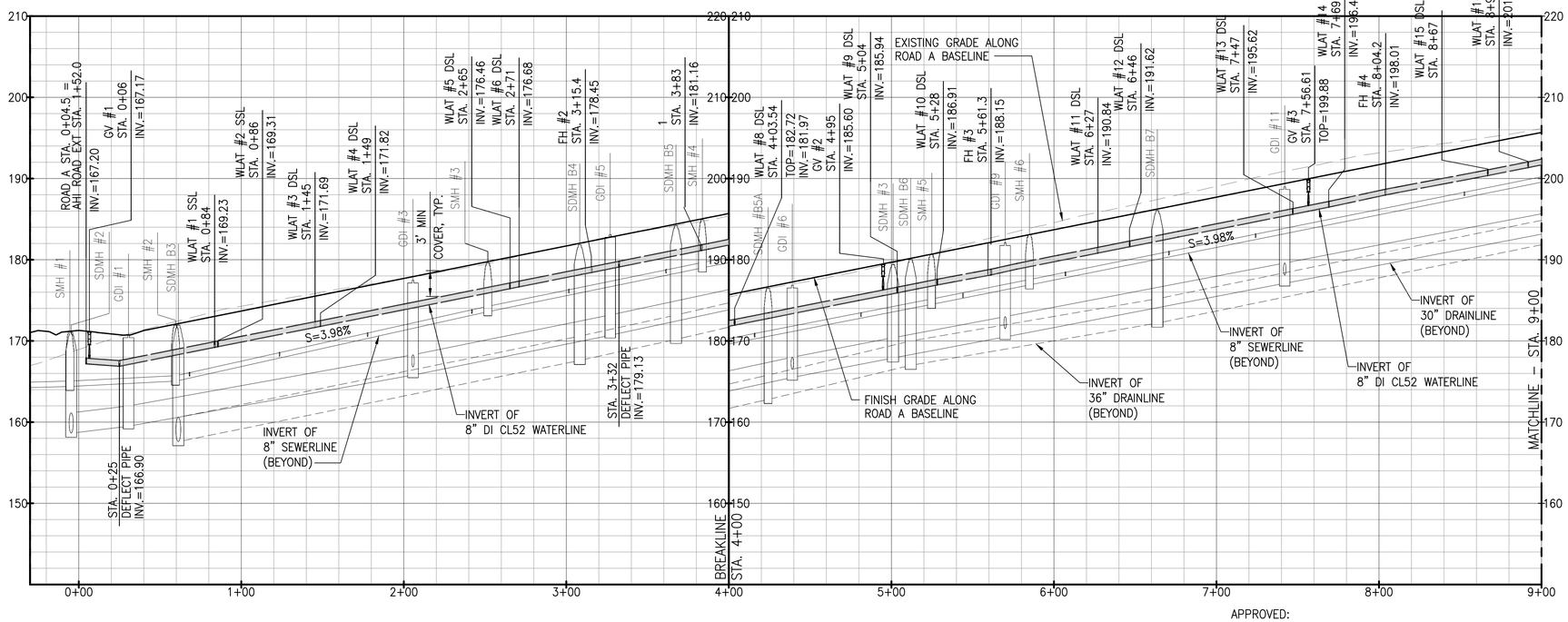

PROFILE – WATERLINE A

SCALE: HORIZ 1" = 40'
VERT 1" = 8'

NOTES:

1. FOR ROADWAY TYPICAL SECTIONS, SEE SHEET C-105.
2. FOR SEWERLINE PLAN AND PROFILE, SEE SHEETS C-221 TO C-226.
3. FOR DRAINLINE PLAN AND PROFILE, SEE SHEET C-211 TO C-214.
4. FOR BASIN PLAN AND PROFILE, SEE SHEET C-215.
5. FOR DRAIN LATERAL PLAN AND PROFILE, SEE SHEET C-216.
6. FOR FIRE HYDRANT PROFILES, SEE SHEET C-236.
7. FOR GATE VALVE AND VALVE BOX DETAIL, SEE DET. 2/C-512
8. FOR SINGLE SERVICE LATERALS, SEE DET. 1/C-511
9. FOR DOUBLE SERVICE LATERALS, SEE DET. 2/C-511
10. FOR FIRE HYDRANT CONNECTION, SEE DET. 1/C-510

APPROVED:

FOR MANAGER AND CHIEF ENGINEER, DEPT. OF WATER COUNTY OF KAUA'I — DATE

GRAPHIC SCALE:

40' 20' 0 40' 80'
SCALE: 1" = 40'

8' 0 8' 16'
SCALE: 1" = 8'

RICHARD Y. SANTO
LICENSED PROFESSIONAL ENGINEER
NO. 8955-C
HAWAII USA

This work was prepared by me or under my supervision and I certify that to the best of my knowledge, the design is in accordance with the Professional Engineers, Architects, Surveyors, and Landscape Architects Laws of the State of Hawai'i.
4/30/24
Date of Signature

NOTE: Contractor to check and verify dimensions at job before proceeding with work.

SSFM International, Inc.
501 Sumner Street
Suite 620
Honolulu, Hawaii 96817

REVISION	DATE	DESCRIPTION	MADE BY	APPROVED

PROJECT:
DEPARTMENT OF HAWAIIAN HOME LANDS
SITE AND INFRASTRUCTURE IMPROVEMENTS
FOR HANAPĒPĒ RESIDENTIAL LOTS, PHASE 2
TMK: (4) 1-8-007: 003 (PORTION) & (4) 2-8-007: 001 TO 050 (PORTION)
Hanapēpē, Waimea, Kaua'i, Hawai'i

WATERLINE A PLAN AND PROFILE - 1

THIS DOCUMENT CONTAINS INFORMATION PROPRIETARY TO SSFM INTERNATIONAL, INC., AND IS FURNISHED IN CONFIDENCE FOR THE LIMITED PURPOSE OF EVALUATION, BIDDING OR REVIEW. THIS DOCUMENT OR ITS CONTENTS MAY NOT BE USED FOR ANY OTHER PURPOSE AND MAY NOT BE REPRODUCED OR DISCLOSED TO OTHERS WITHOUT THE PRIOR WRITTEN CONSENT OF SSFM INTERNATIONAL, INC.

DATE
NOVEMBER 2022

SHEET NUMBER
C-231
55 OF 109 SHEETS

PRINTED: 11/11/22

W:_CIVIL 3D PROJECTS\2018_021.001 DHHL HANAPEPE RESIDENTIAL SUBDIVISION PHASE 2\01 CE DWG\C-231 - C-233 WATERLINE PLAN AND PROFILES.DWG 11/11/2022 8:58 AM BBROWN

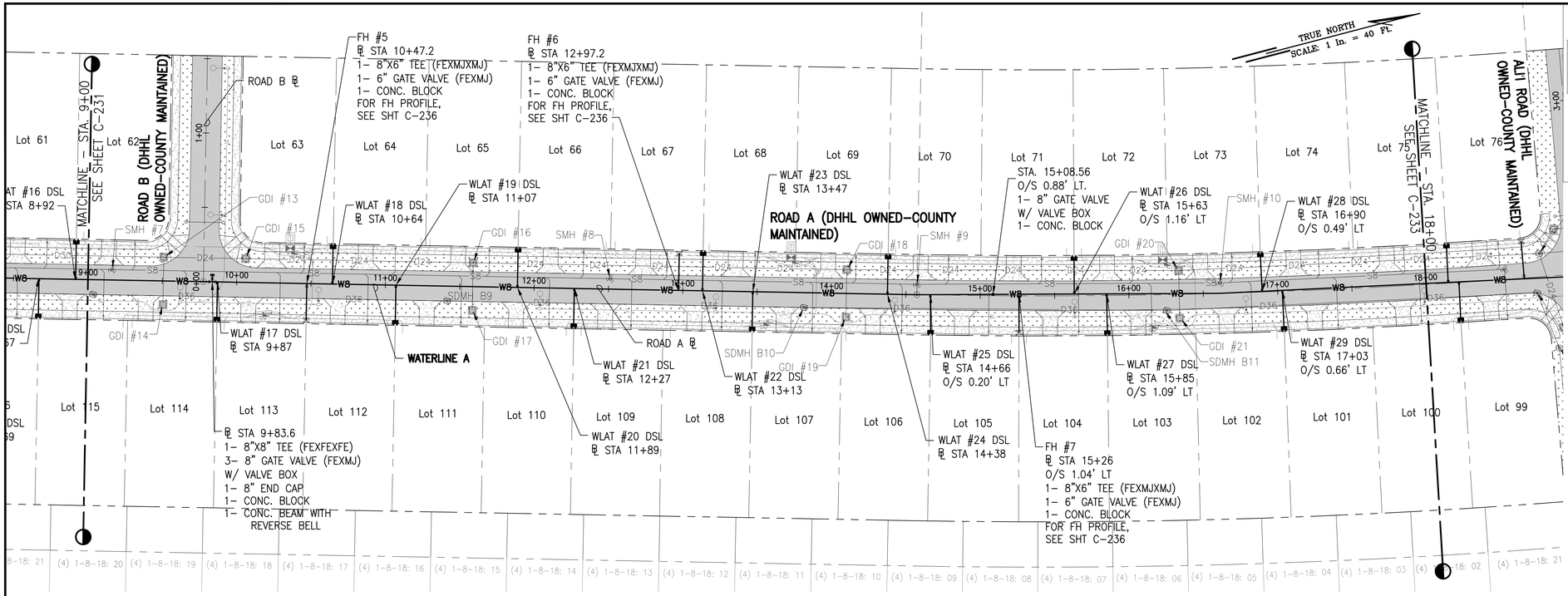

PLAN – WATERLINE A

SCALE: 1" = 40'

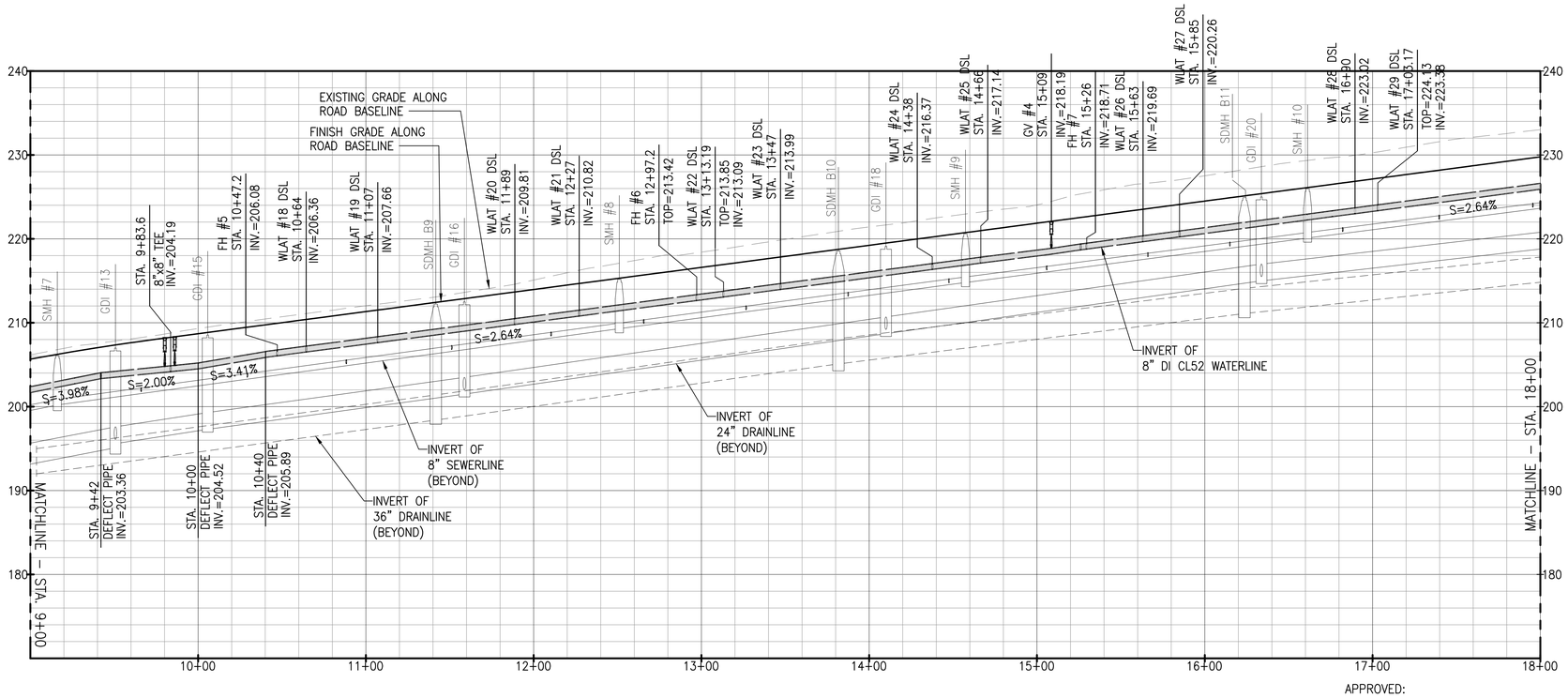

PROFILE – WATERLINE A

SCALE: HORIZ 1" = 40'
VERT 1" = 8'

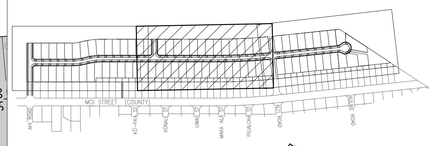

KEY PLAN

NOT TO SCALE

LEGEND:

- PROPERTY LINE
- LOT LINE
- D36 DRAINLINE
- S8 SEWERLINE
- W WATERLINE
- GRATED DRAIN INLET (GDI)
- STORM DRAIN MANHOLE (SDMH)
- SEWER MANHOLE (SMH)
- FIRE HYDRANT
- SINGLE SERVICE LATERAL (SSL)
- DOUBLE SERVICE LATERAL (DSL)
- ASPHALTIC CONCRETE PAVEMENT
- CONCRETE PAVEMENT
- GRASS

NOTES:

1. FOR ROADWAY TYPICAL SECTIONS, SEE SHEET C-105.
2. FOR SEWERLINE PLAN AND PROFILE, SEE SHEETS C-221 TO C-226.
3. FOR DRAINLINE PLAN AND PROFILE, SEE SHEET C-211 TO C-214.
4. FOR BASIN PLAN AND PROFILE, SEE SHEET C-215.
5. FOR DRAIN LATERAL PLAN AND PROFILE, SEE SHEET C-216.
6. FOR FIRE HYDRANT PROFILES, SEE SHEET C-236.
7. FOR GATE VALVE AND VALVE BOX DETAIL, SEE DET. 2/C-512
8. FOR SINGLE SERVICE LATERALS, SEE DET. 1/C-511
9. FOR DOUBLE SERVICE LATERALS, SEE DET. 2/C-511
10. FOR FIRE HYDRANT CONNECTION, SEE DET. 1/C-510

APPROVED:

FOR MANAGER AND CHIEF ENGINEER, DEPT. OF WATER COUNTY OF KAUA'I — DATE

GRAPHIC SCALE:

40' 20' 0 40' 80'
SCALE: 1" = 40'

8' 0 8' 16'
SCALE: 1" = 8'

RICHARD Y. SANTO
LICENSED PROFESSIONAL ENGINEER
NO. 8955-C
HAWAII USA

This work was prepared by me or under my supervision. Date of expiration: 4/30/24. Pages or sheets covered by this seal: All sheets. Richard Y. Santo Professional Engineer, Architect, Surveyor, and Landscape Architect

4/30/24
Signature — Date

NOTE: Contractor to check and verify dimensions at job before proceeding with work. Any discrepancies shall be reported to the Engineer. Drawings are not to be scaled. Figured dimensions shall govern. Ownership of Drawings: These plans are the property of the Owner and shall not be used in whole or in part without the written consent of the Owner.

SSFM International, Inc.
501 Sumner Street
Suite 620
Honolulu, Hawaii 96817

REVISION	DATE	DESCRIPTION	MADE BY	APPROVED

PROJECT:
DEPARTMENT OF HAWAIIAN HOME LANDS
SITE AND INFRASTRUCTURE IMPROVEMENTS
FOR HANAPĒPĒ RESIDENTIAL LOTS, PHASE 2
TMK: (4) 1-8-007: 003 (PORTION) & (4) 2-8-007: 001 TO 050 (PORTION)
Hanapēpē, Waimea, Kaua'i, Hawai'i

WATERLINE A PLAN AND PROFILE - 2

THIS DOCUMENT CONTAINS INFORMATION PROPRIETARY TO SSFM INTERNATIONAL, INC., AND IS FURNISHED IN CONFIDENCE FOR THE LIMITED PURPOSE OF EVALUATION, BIDDING OR REVIEW. THIS DOCUMENT OR ITS CONTENTS MAY NOT BE USED FOR ANY OTHER PURPOSE AND MAY NOT BE DISCLOSED OR LOANED TO OTHERS WITHOUT THE PRIOR WRITTEN CONSENT OF SSFM INTERNATIONAL, INC.

DATE
NOVEMBER 2022

SHEET NUMBER
C-232
56 OF 109 SHEETS

W:_CIVIL 3D PROJECTS\2018_021.001 DHHL HANAPEPE RESIDENTIAL SUBDIVISION PHASE 2\01 CE DWG\C-231 - C-233 WATERLINE PLAN AND PROFILES.DWG 11/11/2022 9:05 AM BBROWN
PRINTED: 11/11/22

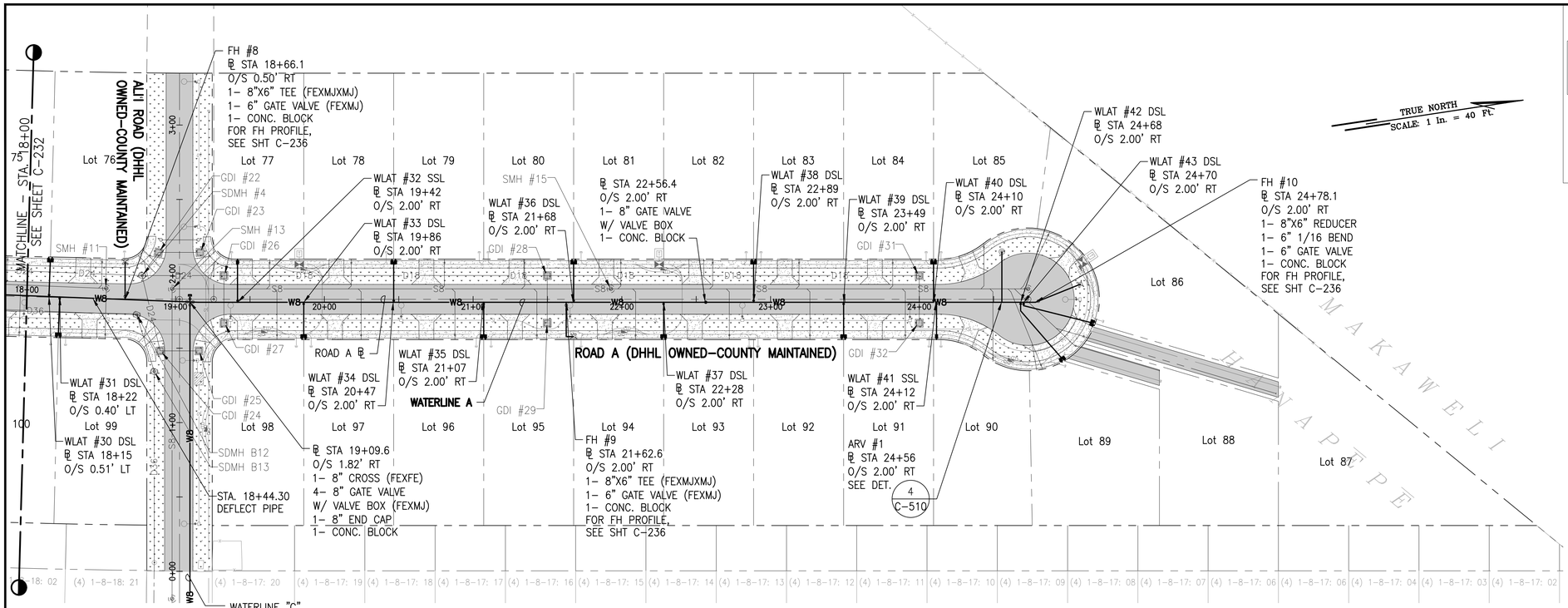

PLAN – WATERLINE A

SCALE: 1" = 40'

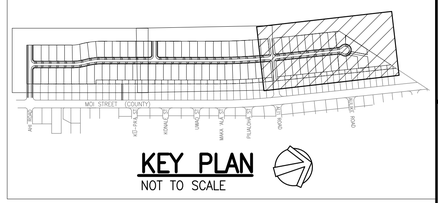

LEGEND:

- PROPERTY LINE
- LOT LINE
- D36 — DRAINLINE
- S8 — SEWERLINE
- W — WATERLINE
- GRATED DRAIN INLET (GDI)
- STORM DRAIN MANHOLE (SDMH)
- SEWER MANHOLE (SMH)
- FIRE HYDRANT
- SINGLE SERVICE LATERAL (SSL)
- DOUBLE SERVICE LATERAL (DSL)
- ASPHALTIC CONCRETE PAVEMENT
- CONCRETE PAVEMENT
- GRASS

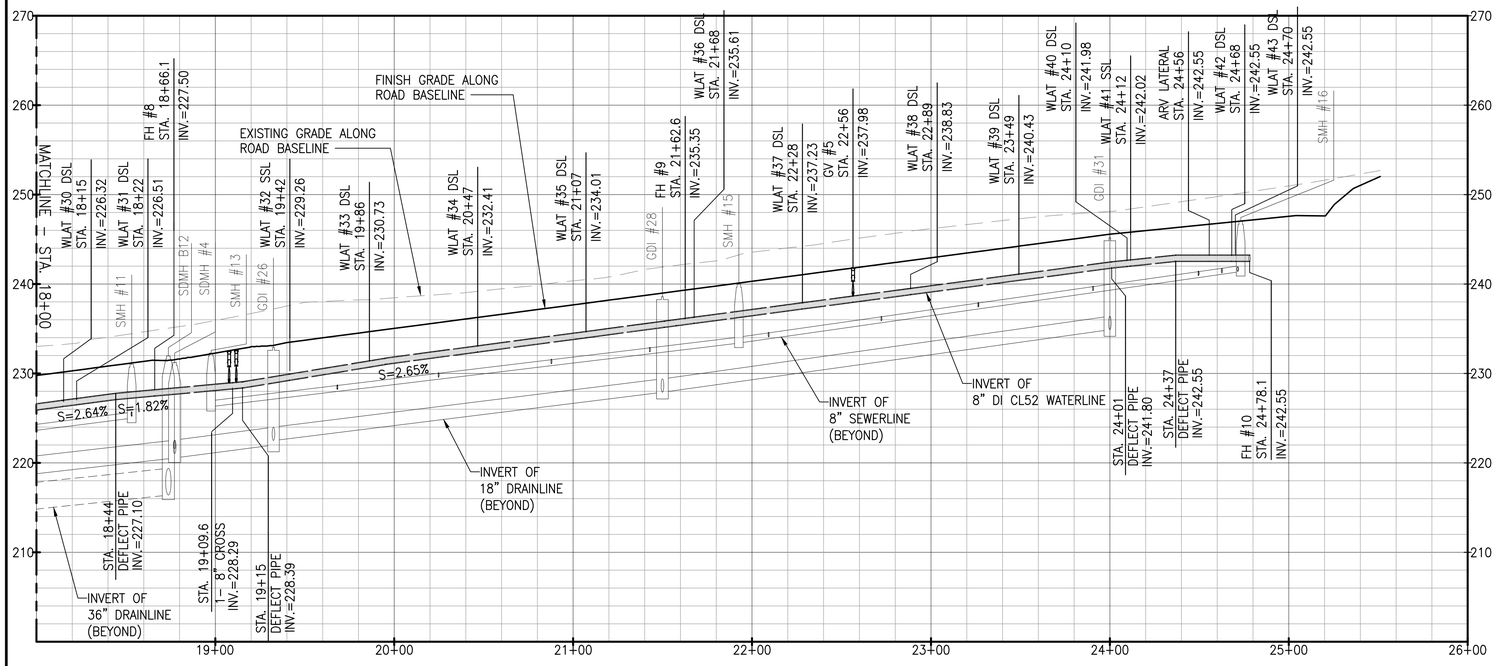

PROFILE – WATERLINE A

SCALE: HORIZ 1" = 40'
VERT 1" = 8'

NOTES:

1. FOR ROADWAY TYPICAL SECTIONS, SEE SHEET C-105.
2. FOR SEWERLINE PLAN AND PROFILE, SEE SHEETS C-221 TO C-226.
3. FOR DRAINLINE PLAN AND PROFILE, SEE SHEET C-211 TO C-214.
4. FOR BASIN PLAN AND PROFILE, SEE SHEET C-215.
5. FOR DRAIN LATERAL PLAN AND PROFILE, SEE SHEET C-216.
6. FOR FIRE HYDRANT PROFILES, SEE SHEET C-236.
7. FOR GATE VALVE AND VALVE BOX DETAIL, SEE DET. 2/C-512
8. FOR SINGLE SERVICE LATERALS, SEE DET. 1/C-511
9. FOR DOUBLE SERVICE LATERALS, SEE DET. 2/C-511
10. FOR FIRE HYDRANT CONNECTION, SEE DET. 1/C-510

APPROVED:

FOR MANAGER AND CHIEF ENGINEER, DEPT. OF WATER COUNTY OF KAUA'I — DATE

GRAPHIC SCALE:

40' 20' 0 40' 80'
SCALE: 1" = 40'

8' 0 8' 16'
SCALE: 1" = 8'

RICHARD Y. SANTO
LICENSED PROFESSIONAL ENGINEER
NO. 8955-C
HAWAII USA

This work was prepared by me or under my supervision and to the best of my knowledge and belief, is in accordance with the standard of professional practice. I am aware that section 464-8, HRS, states that plans, specifications, reports, or documents prepared by a professional engineer shall be dated and shall be signed by the engineer in responsible charge. The signature shall be accompanied by the engineer's seal or stamp. 4/30/24

NOTE: Contractor to check and verify dimensions at job before proceeding with work.

SSFM International, Inc.
501 Sumner Street
Suite 620
Honolulu, Hawaii 96817

REVISION	DATE	DESCRIPTION	MADE BY	APPROVED

PROJECT:
DEPARTMENT OF HAWAIIAN HOME LANDS
SITE AND INFRASTRUCTURE IMPROVEMENTS
FOR HANAPĒPĒ RESIDENTIAL LOTS, PHASE 2
TMK: (4) 1-8-007: 003 (PORTION) & (4) 2-8-007: 001 TO 050 (PORTION)
Hanapēpē, Waimea, Kaua'i, Hawai'i

WATERLINE A PLAN AND PROFILE - 3

THIS DOCUMENT CONTAINS INFORMATION PROPRIETARY TO SSFM INTERNATIONAL, INC. AND IS FURNISHED IN CONFIDENCE FOR THE LIMITED PURPOSE OF EVALUATION, BIDDING OR REVIEW. THIS DOCUMENT OR ITS CONTENTS MAY NOT BE USED FOR ANY OTHER PURPOSE AND MAY NOT BE REPRODUCED OR ASSIGNED TO OTHERS WITHOUT THE PRIOR WRITTEN CONSENT OF SSFM INTERNATIONAL, INC.

DATE
NOVEMBER 2022

SHEET NUMBER
C-233
57 OF 109 SHEETS

PRINTED: 11/11/22

W:_CIVIL 3D PROJECTS\2018_021.001 DHHL HANAPEPE RESIDENTIAL SUBDIVISION PHASE 2\01 CE DWG\C-231 - C-233 WATERLINE PLAN AND PROFILES.DWG 11/11/2022 9:10 AM BBROWN

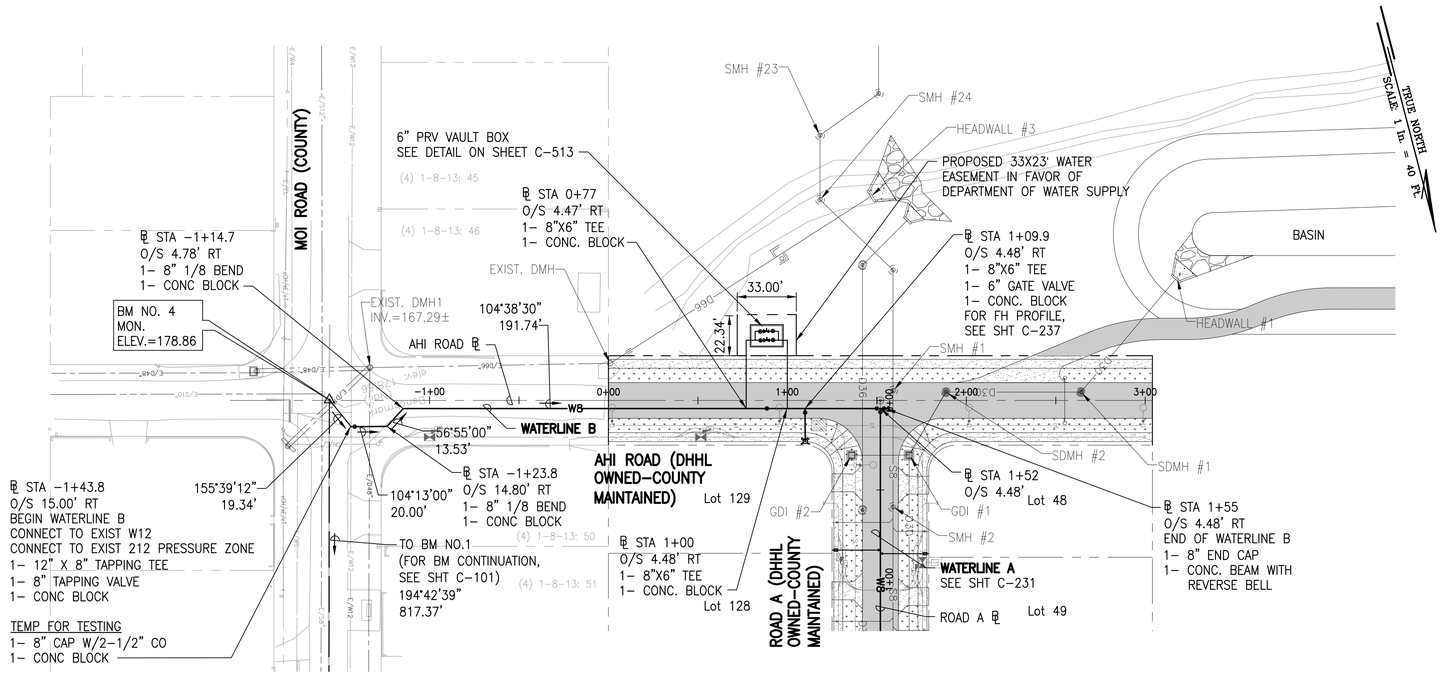

PLAN – WATERLINE B

SCALE: 1" = 40'

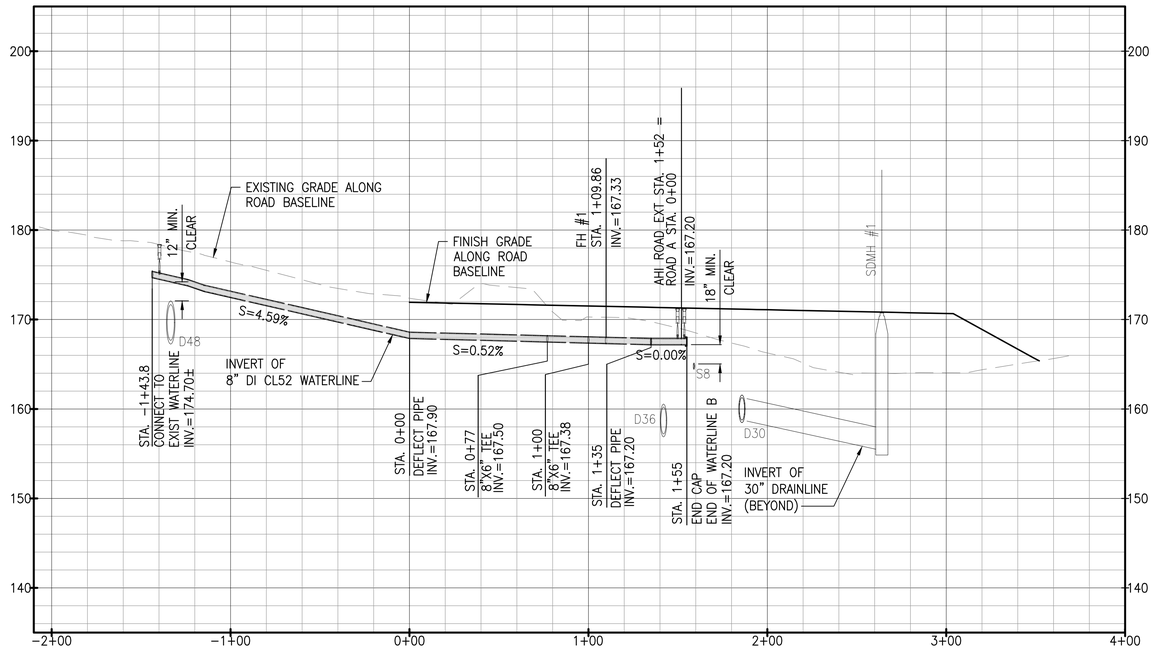

PROFILE – WATERLINE B

SCALE: HORIZ 1" = 40'
VERT 1" = 8'

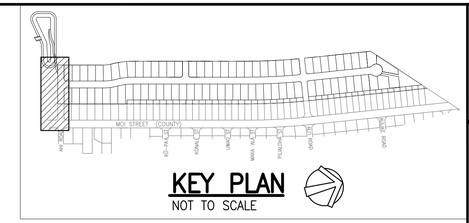

LEGEND:

- PROPERTY LINE
- LOT LINE
- D36 — DRAINLINE
- S8 — SEWERLINE
- W — WATERLINE
- GRATED DRAIN INLET (GDI)
- STORM DRAIN MANHOLE (SDMH)
- SEWER MANHOLE (SMH)
- FIRE HYDRANT
- SINGLE SERVICE LATERAL (SSL)
- DOUBLE SERVICE LATERAL (DSL)
- ASPHALTIC CONCRETE PAVEMENT
- CONCRETE PAVEMENT
- GRASS

NOTES:

1. FOR ROADWAY TYPICAL SECTIONS, SEE SHEET C-105.
2. FOR SEWERLINE PLAN AND PROFILE, SEE SHEETS C-221 TO C-226.
3. FOR DRAINLINE PLAN AND PROFILE, SEE SHEET C-211 TO C-214.
4. FOR BASIN PLAN AND PROFILE, SEE SHEET C-215.
5. FOR DRAIN LATERAL PLAN AND PROFILE, SEE SHEET C-216.
6. FOR FIRE HYDRANT PROFILES, SEE SHEET C-236.
7. FOR GATE VALVE AND VALVE BOX DETAIL, SEE DET. 2/C-512
8. FOR SINGLE SERVICE LATERALS, SEE DET. 1/C-511
9. FOR DOUBLE SERVICE LATERALS, SEE DET. 2/C-511
10. FOR FIRE HYDRANT CONNECTION, SEE DET. 1/C-510

GRAPHIC SCALE:

40' 20' 0 40' 80'
SCALE: 1" = 40'

8' 0 8' 16'
SCALE: 1" = 8'

APPROVED:

FOR MANAGER AND CHIEF ENGINEER, DEPT. OF WATER COUNTY OF KAUA'I — DATE

RICHARD Y. SANTO
LICENSED PROFESSIONAL ENGINEER
NO. 8955-C
HAWAII USA

This work was prepared by me or under my supervision for the exclusive use of SSFM International, Inc. and its clients. It is not to be used in whole or in part for any other project without the written authorization of SSFM International, Inc. 4/30/24
Signature — Date — Expiration Date of the License

NOTE: Contractor to check and verify dimensions at job before proceeding with work.

SSFM International, Inc.
501 Sumner Street
Suite 620
Honolulu, Hawaii 96817

REVISION	DATE	DESCRIPTION	MADE BY	APPROVED

PROJECT:
DEPARTMENT OF HAWAIIAN HOME LANDS
SITE AND INFRASTRUCTURE IMPROVEMENTS
FOR HANAPĒPĒ RESIDENTIAL LOTS, PHASE 2
TMK: (4) 1-8-007: 003 (PORTION) & (4) 2-8-007: 001 TO 050 (PORTION)
Hanapēpē, Waimea, Kaua'i, Hawai'i

WATERLINE B PLAN AND PROFILE

THIS DOCUMENT CONTAINS INFORMATION PROPRIETARY TO SSFM INTERNATIONAL, INC., AND IS FURNISHED IN CONFIDENCE FOR THE LIMITED PURPOSE OF EVALUATION, BIDDING OR REVIEW. THIS DOCUMENT OR ITS CONTENTS MAY NOT BE USED FOR ANOTHER PURPOSE AND MAY NOT BE DISCLOSED OR DISTRIBUTED TO OTHERS WITHOUT THE PRIOR WRITTEN CONSENT OF SSFM INTERNATIONAL, INC.

DATE
NOVEMBER 2022

SHEET NUMBER
C-234
58 OF 109 SHEETS

W:_CIVIL 3D PROJECTS\2018_021.001 DHHL HANAPEPE RESIDENTIAL SUBDIVISION PHASE 2\01 CE DWG\C-234 - C-235 AHI AND ALII ROAD WATERLINE PNP.DWG 11/11/2022 8:53 AM BBROWN

PRINTED: 11/11/22

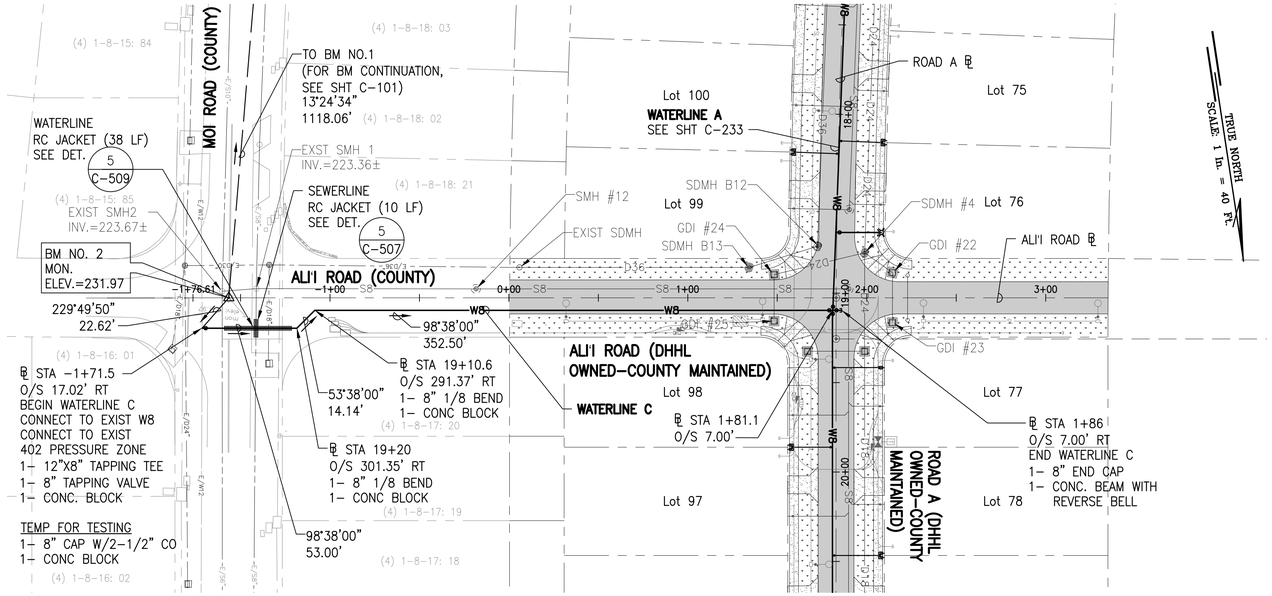

PLAN – WATERLINE C

SCALE: 1" = 40'

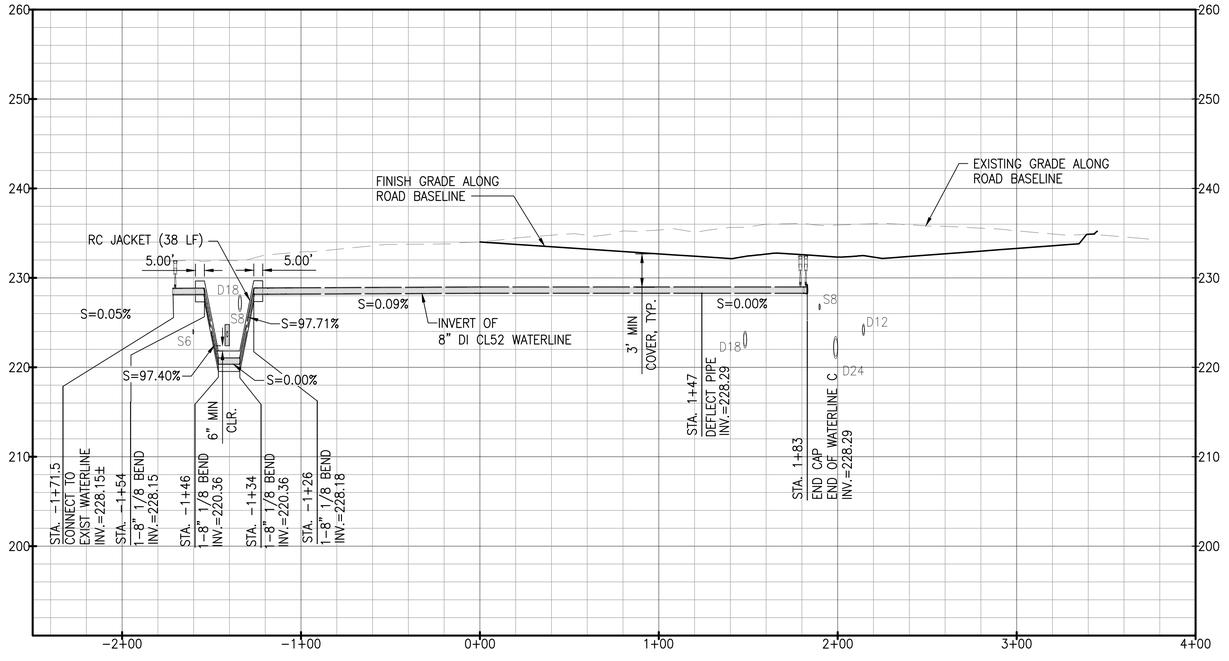

PROFILE – WATERLINE C

SCALE: HORIZ 1" = 40'
VERT 1" = 8'

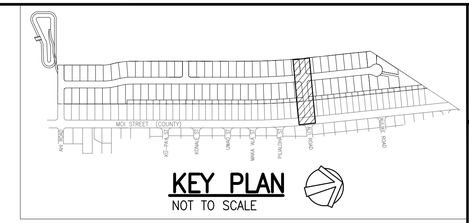

KEY PLAN

NOT TO SCALE

LEGEND:

- PROPERTY LINE
- LOT LINE
- D36 — DRAINLINE
- S8 — SEWERLINE
- W — WATERLINE
- GRATED DRAIN INLET (GDI)
- STORM DRAIN MANHOLE (SDMH)
- SEWER MANHOLE (SMH)
- FIRE HYDRANT
- SINGLE SERVICE LATERAL (SSL)
- DOUBLE SERVICE LATERAL (DSL)
- ASPHALTIC CONCRETE PAVEMENT
- CONCRETE PAVEMENT
- GRASS

NOTES:

1. FOR ROADWAY TYPICAL SECTIONS, SEE SHEET C-105.
2. FOR SEWERLINE PLAN AND PROFILE, SEE SHEETS C-221 TO C-226.
3. FOR DRAINLINE PLAN AND PROFILE, SEE SHEET C-211 TO C-214.
4. FOR BASIN PLAN AND PROFILE, SEE SHEET C-215.
5. FOR DRAIN LATERAL PLAN AND PROFILE, SEE SHEET C-216.
6. FOR FIRE HYDRANT PROFILES, SEE SHEET C-236.
7. FOR GATE VALVE AND VALVE BOX DETAIL, SEE DET. 2/C-512
8. FOR SINGLE SERVICE LATERALS, SEE DET. 1/C-511
9. FOR DOUBLE SERVICE LATERALS, SEE DET. 2/C-511
10. FOR FIRE HYDRANT CONNECTION, SEE DET. 1/C-510

APPROVED:

FOR MANAGER AND CHIEF ENGINEER, DEPT. OF WATER COUNTY OF KAUA'I — DATE

GRAPHIC SCALE:

40' 20' 0 40' 80'
SCALE: 1" = 40'

8' 0 8' 16'
SCALE: 1" = 8'

RICHARD Y. SANTO
LICENSED PROFESSIONAL ENGINEER
NO. 8955-C
HAWAII, USA

This work was prepared by me or under my supervision and I certify that to the best of my knowledge, the design is in accordance with accepted engineering practice. (Design, type of construction, and specific exclusions are described in the Preliminary Engineering Report, Specifications, and Construction Drawings.)

4/30/24
Registered Professional Engineer, State of Hawaii
Signature

NOTE: Contractor to check and verify dimensions at job before proceeding with work.

SSFM International, Inc.
501 Sumner Street
Suite 620
Honolulu, Hawaii 96817

REVISION	DATE	DESCRIPTION	MADE BY	APPROVED

PROJECT:
DEPARTMENT OF HAWAIIAN HOME LANDS
SITE AND INFRASTRUCTURE IMPROVEMENTS
FOR HANAPĒPĒ RESIDENTIAL LOTS, PHASE 2
TMK: (4) 1-8-007: 003 (PORTION) & (4) 2-8-007: 001 TO 050 (PORTION)
Hanapēpē, Waimea, Kaua'i, Hawai'i

WATERLINE C PLAN AND PROFILE

THIS DOCUMENT CONTAINS INFORMATION PROPRIETARY TO SSFM INTERNATIONAL, INC., AND IS FURNISHED IN CONFIDENCE FOR THE LIMITED PURPOSE OF EVALUATION, BIDDING OR REVIEW. THIS DOCUMENT OR ITS CONTENTS MAY NOT BE USED FOR ANY OTHER PURPOSE AND MAY NOT BE REPRODUCED OR ADDED TO OR ALTERED WITHOUT THE PRIOR WRITTEN CONSENT OF SSFM INTERNATIONAL, INC.

DATE
NOVEMBER 2022

SHEET NUMBER
C-235
59 OF 109 SHEETS

W:_CIVIL 3D PROJECTS\2018_021.001 DHHL HANAPEPE RESIDENTIAL SUBDIVISION PHASE 2\01 CE DWG\C-234 - C-235 AHI AND ALII ROAD WATERLINE PNP.DWG 11/11/2022 8:53 AM BBROWN

PRINTED: 11/11/22

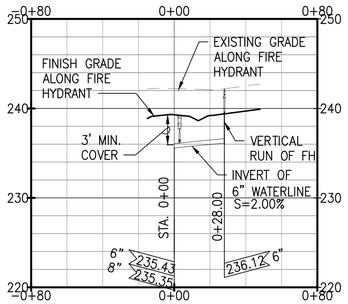

ROAD A – ℄ STA. 21+62±
PROFILE – FH #9

SCALE: HORIZ 1" = 40'
VERT 1" = 8'

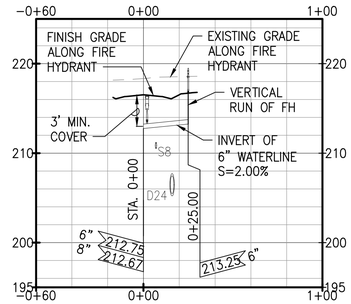

ROAD A – ℄ STA. 12+87±
PROFILE – FH #6

SCALE: HORIZ 1" = 40'
VERT 1" = 8'

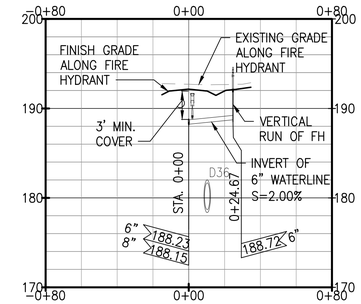

ROAD A – ℄ STA. 5+59±
PROFILE – FH #3

SCALE: HORIZ 1" = 40'
VERT 1" = 8'

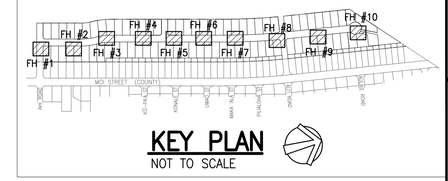

KEY PLAN
NOT TO SCALE

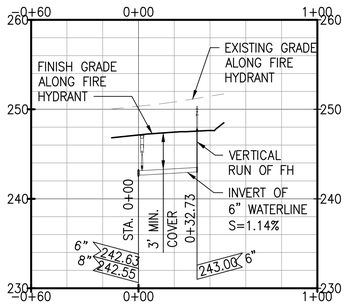

ROAD A – ℄ STA. 24+78.1±
PROFILE – FH #10

SCALE: HORIZ 1" = 40'
VERT 1" = 8'

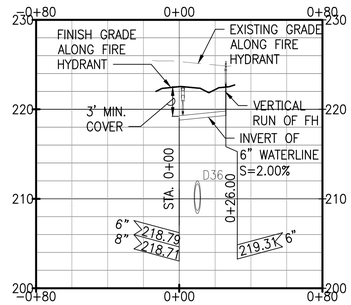

ROAD A – ℄ STA. 15+26±
PROFILE – FH #7

SCALE: HORIZ 1" = 40'
VERT 1" = 8'

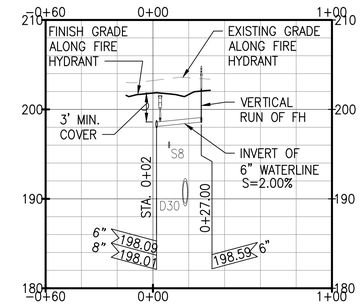

ROAD A – ℄ STA. 8+07±
PROFILE – FH #4

SCALE: HORIZ 1" = 40'
VERT 1" = 8'

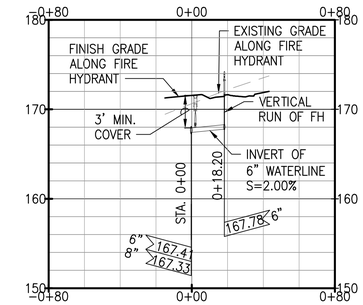

AHI ROAD – ℄ STA. 1+10±
PROFILE – FH #1

SCALE: HORIZ 1" = 40'
VERT 1" = 8'

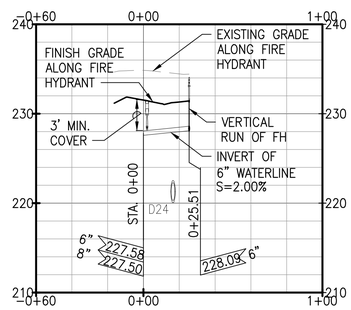

ROAD A – ℄ STA. 18+66±
PROFILE – FH #8

SCALE: HORIZ 1" = 40'
VERT 1" = 8'

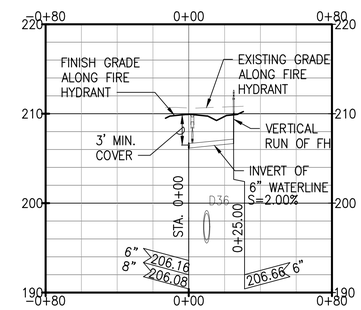

ROAD A – ℄ STA. 10+47±
PROFILE – FH #5

SCALE: HORIZ 1" = 40'
VERT 1" = 8'

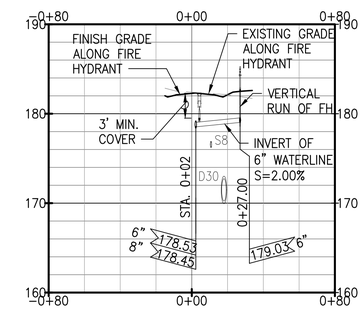

ROAD A – ℄ STA. 3+25±
PROFILE – FH #2

SCALE: HORIZ 1" = 40'
VERT 1" = 8'

APPROVED:

FOR MANAGER AND CHIEF ENGINEER, DEPT. OF WATER COUNTY OF KAUA'I — DATE

GRAPHIC SCALE:

40' 20' 0 40' 80'
SCALE: 1" = 40'

8' 0 8' 16'
SCALE: 1" = 8'

RICHARD Y. SANTO
LICENSED PROFESSIONAL ENGINEER
NO. 8955-C
HAWAII USA

This work was prepared by me or under my supervision and I certify that to the best of my knowledge, the design of construction drawings is in accordance with accepted Professional Engineering standards, Specifications, and construction practices.

4/30/24
Expiration date of the license

NOTE: Contractor to check and verify dimensions at job before proceeding with work.

SSFM International, Inc.
501 Sumner Street
Suite 620
Honolulu, Hawaii 96817

REVISION	DATE	DESCRIPTION	MADE BY	APPROVED

PROJECT:
DEPARTMENT OF HAWAIIAN HOME LANDS
SITE AND INFRASTRUCTURE IMPROVEMENTS
FOR HANAPĒPĒ RESIDENTIAL LOTS, PHASE 2
TMK: (4) 1-8-007: 003 (PORTION) & (4) 2-8-007: 001 TO 050 (PORTION)
Hanapēpē, Waimea, Kaua'i, Hawai'i

FIRE HYDRANT PROFILES

THIS DOCUMENT CONTAINS INFORMATION PROPRIETARY TO SSFM INTERNATIONAL, INC., AND IS FURNISHED IN CONFIDENCE FOR THE LIMITED PURPOSE OF EVALUATION, BIDDING OR REVIEW. THIS DOCUMENT OR ITS CONTENTS MAY NOT BE USED FOR ANOTHER PURPOSE AND MAY NOT BE DISCLOSED OR LOANED TO OTHERS WITHOUT THE PRIOR WRITTEN CONSENT OF SSFM INTERNATIONAL, INC.

DATE
NOVEMBER 2022

SHEET NUMBER
C-236

60 OF 109 SHEETS

W:_CIVIL 3D PROJECTS\2018_021.001 DHHL HANAPEPE RESIDENTIAL SUBDIVISION PHASE 2\01 CE DWG\C-236 FIRE HYDRANT PROFILES.DWG 11/11/2022 10:15 AM BBROWN

PRINTED: 11/11/22

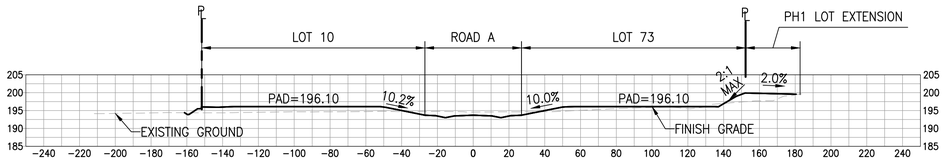

6+00

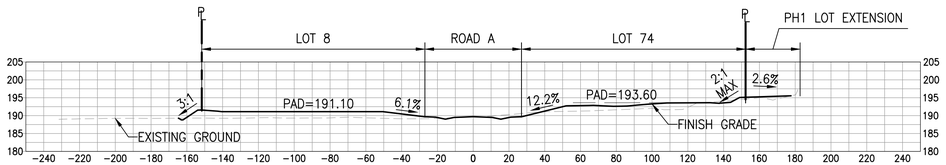

5+00

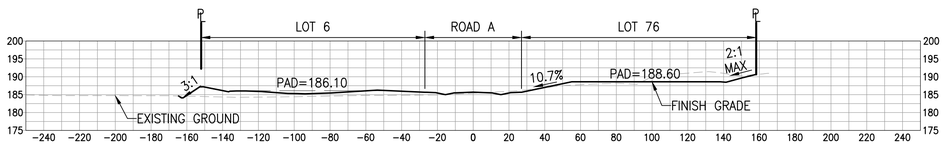

4+00

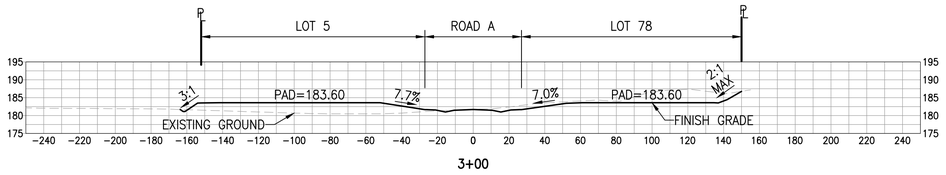

3+00

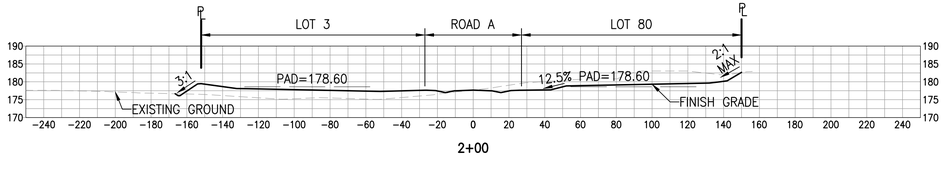

2+00

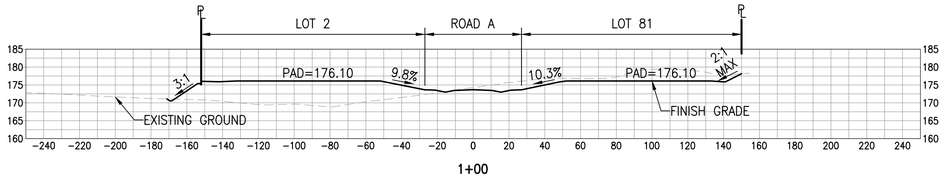

1+00

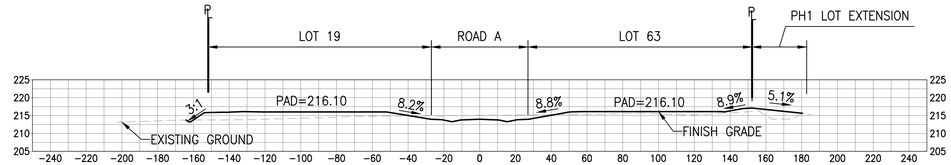

12+00

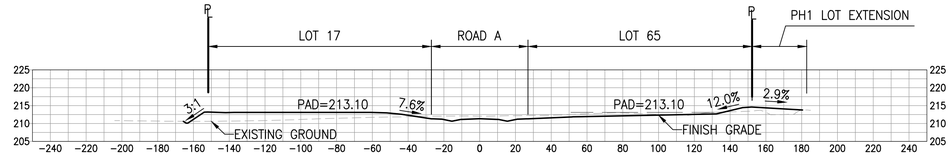

11+00

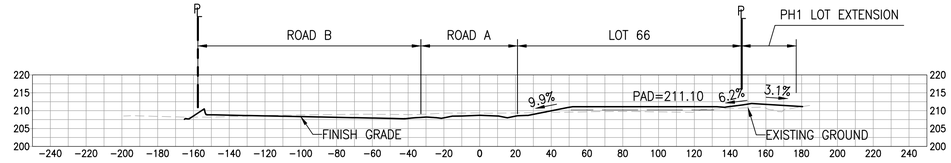

10+00

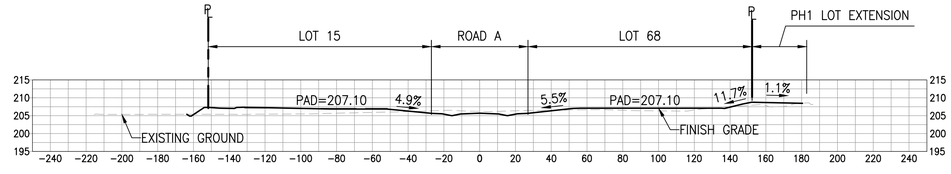

9+00

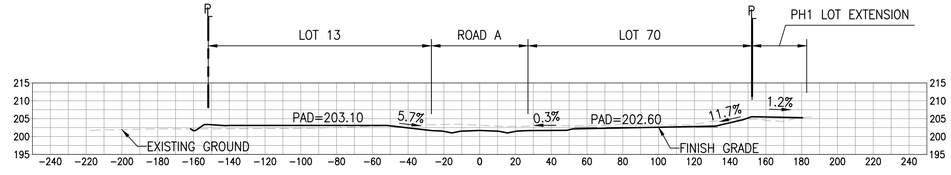

8+00

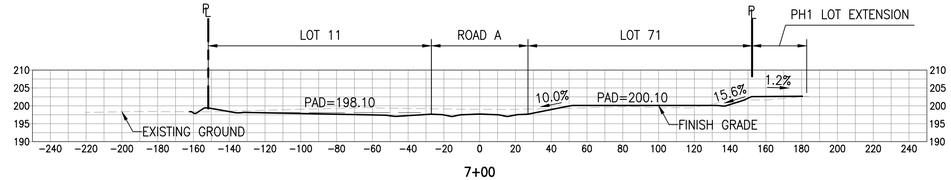

7+00

GRAPHIC SCALE:

40' 20' 0 40' 80'

SCALE: 1" = 40'

20' 10' 0 20' 40'

SCALE: 1" = 20'

GRADING SECTIONS – 1

SCALE: HORIZ 1" = 40'
VERT 1" = 20'

RICHARD Y. SANTO
LICENSED PROFESSIONAL ENGINEER
NO. 8955-C
HAWAII USA

This work was prepared by me or under my supervision and is a professional work product as that term is defined in Section 16-115-1, Hawaii Administrative Rules, Professional Engineers, Architects, Surveyors, and Landscape Architects. 4/30/24
Signature Date of Signature

NOTE: Contractor to check and verify dimensions at job before proceeding with work.

SSFM International, Inc.
501 Sumner Street
Suite 620
Honolulu, Hawaii 96817

REVISION	DATE	DESCRIPTION	MADE BY	APPROVED

PROJECT:
DEPARTMENT OF HAWAIIAN HOME LANDS
SITE AND INFRASTRUCTURE IMPROVEMENTS
FOR HANAPĒPĒ RESIDENTIAL LOTS, PHASE 2
TMK: (4) 1-8-007: 003 (PORTION) & (4) 2-8-007: 001 TO 050 (PORTION)
Hanapēpē, Waimea, Kaua'i, Hawai'i

GRADING SECTIONS - 1

THIS DOCUMENT CONTAINS INFORMATION PROPRIETARY TO SSFM INTERNATIONAL, INC., AND IS FURNISHED IN CONFIDENCE FOR THE LIMITED PURPOSE OF EVALUATION, BIDDING OR REVIEW. THIS DOCUMENT OR ITS CONTENTS MAY NOT BE USED FOR ANY OTHER PURPOSE AND MAY NOT BE REPRODUCED OR ADAPTED TO OTHERS WITHOUT THE PRIOR WRITTEN CONSENT OF SSFM INTERNATIONAL, INC.

DATE
NOVEMBER 2022

SHEET NUMBER
C-301
61 OF 109 SHEETS

W:_CIVIL 3D PROJECTS\2018_021.001 DHHL HANAPEPE RESIDENTIAL SUBDIVISION PHASE 2\01 CE DWG\C-301 GRADING SECTIONS - 1.DWG 9/30/2022 3:39 PM EBORNALES

PRINTED: 11/8/22

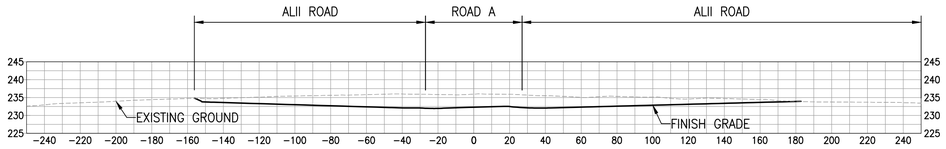

19+00

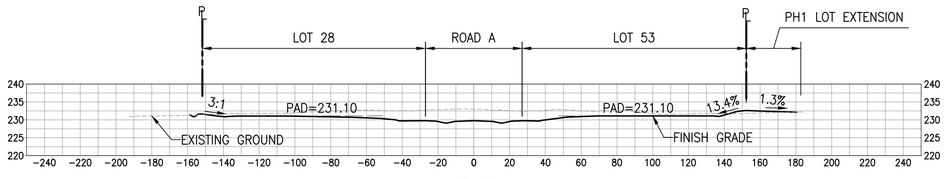

18+00

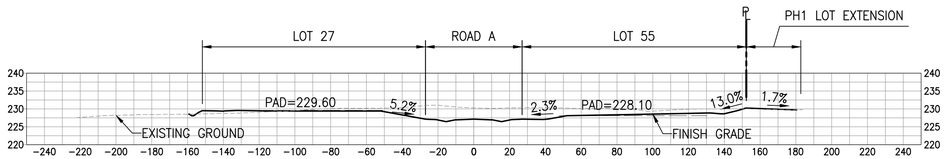

17+00

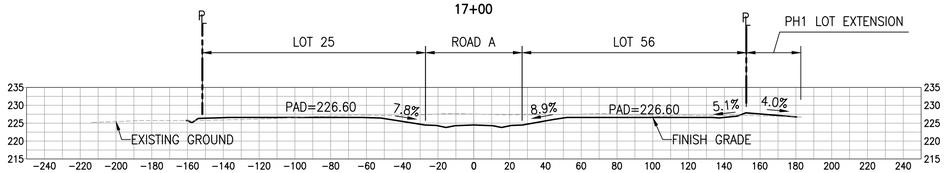

16+00

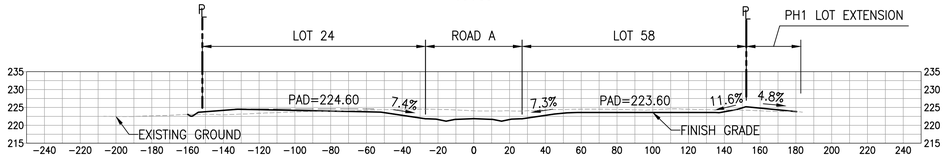

15+00

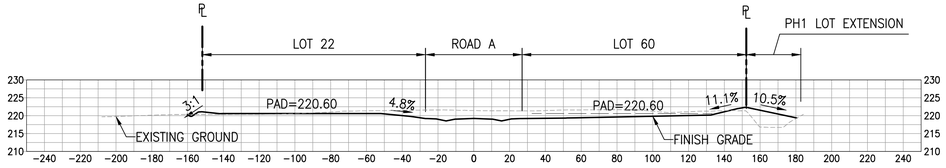

14+00

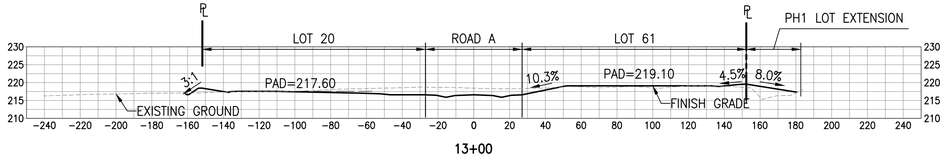

13+00

EARTHWORK QUANTITIES SUMMARY

STATION	CUT VOL (CY)	FILL VOL (CY)	CUM CUT VOL (CY)	CUM FILL VOL (CY)	NET VOL (CY)I
1+00	0.00	0.00	0.00	0.00	0.00
2+00	1159.46	1993.27	1159.46	1993.27	−833.82
3+00	1058.10	1212.36	2217.56	3205.63	−988.07
4+00	790.53	884.29	3008.09	4089.92	−1081.83
5+00	281.22	1070.99	3289.31	5160.91	−1871.60
6+00	194.79	1206.83	3484.10	6367.74	−2883.64
7+00	646.02	655.68	4130.12	7023.42	−2893.30
8+00	899.46	310.92	5029.58	7334.34	−2304.76
9+00	510.05	614.30	5539.63	7948.64	−2409.01
10+00	339.43	777.15	5879.06	8725.79	−2846.72
11+00	443.82	841.76	6322.88	9567.54	−3244.66
12+00	373.69	1075.42	6696.57	10642.97	−3946.40
13+00	575.20	759.88	7271.77	11402.85	−4131.08

*THE EARTHWORK SUMMARY TABLE SHOWN DOES NOT INCLUDE EXCAVATION OR EMBANKMENT FOR THE BASIN, AHI ROAD AND OFFSITE SEWER.

EARTHWORK QUANTITIES SUMMARY

STATION	CUT VOL (CY)	FILL VOL (CY)	CUM CUT VOL (CY)	CUM FILL VOL (CY)	NET VOL (CY)I
14+00	1131.08	386.44	8402.85	11789.29	−3386.44
15+00	1277.17	337.82	9680.02	12127.10	−2447.09
16+00	1215.47	202.22	10895.48	12329.33	−1433.84
17+00	1557.83	121.77	12453.31	12451.09	2.22
18+00	1859.37	83.23	14312.69	12534.32	1778.36
19+00	2494.30	28.52	16806.99	12562.84	4244.14
20+00	2489.60	4.99	19296.59	12567.83	6728.76
21+00	2448.36	20.63	21744.95	12588.46	9156.49
22+00	2555.29	36.70	24300.24	12625.16	11675.08
23+00	1793.50	34.80	26093.74	12659.97	13433.78
24+00	2089.27	43.80	28183.01	12703.77	15479.25
25+00	2367.50	59.41	30550.52	12763.18	17787.34

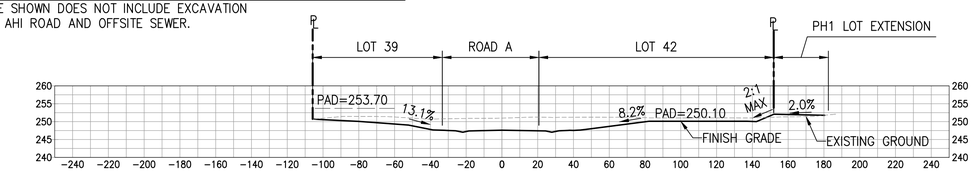

25+00

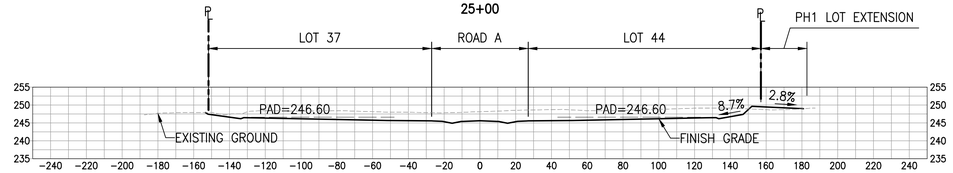

24+00

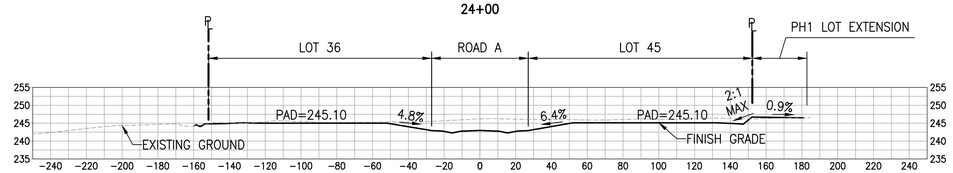

23+00

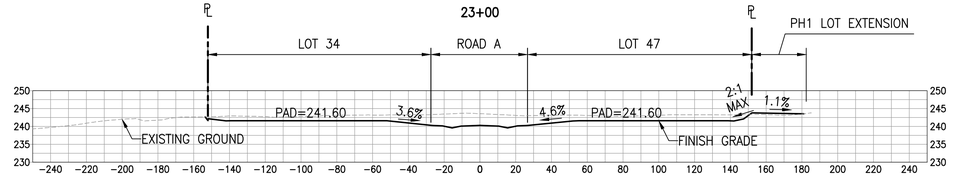

22+00

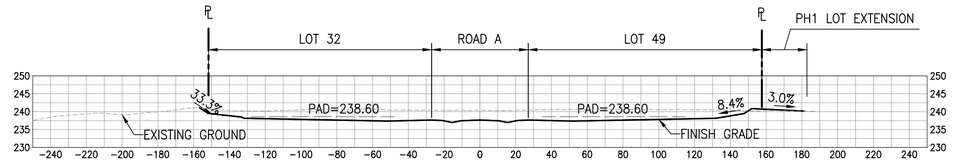

21+00

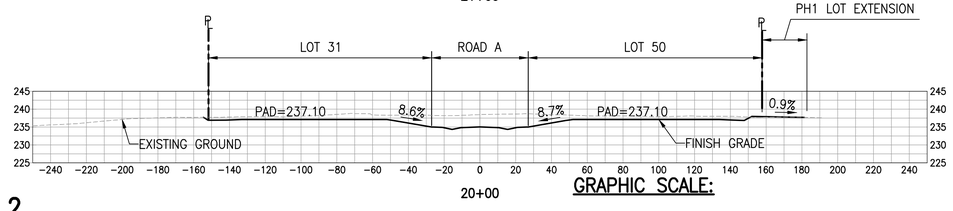

20+00

GRADING SECTIONS – 2

SCALE: HORIZ 1" = 40'
VERT 1" = 20'

GRAPHIC SCALE:

40' 20' 0 40' 80'
SCALE: 1" = 40'

20' 10' 0 20' 40'
SCALE: 1" = 20'

RICHARD Y. SANTO
LICENSED PROFESSIONAL ENGINEER
NO. 8955-C
HAWAII USA

This work was prepared by me or under my supervision for the exclusive use of SSFM International, Inc. and its clients. Unauthorized use of this work product for other projects, Professional Engineers Architects, Surveyors, and unlicensed individuals is prohibited.

4/30/24
Expiration date of the license

Signature

NOTE: Contractor to check and verify dimensions at job before proceeding with work.

SSFM International, Inc.
501 Sumner Street
Suite 620
Honolulu, Hawaii 96817

REVISION	DATE	DESCRIPTION	MADE BY	APPROVED

PROJECT:
DEPARTMENT OF HAWAIIAN HOME LANDS
SITE AND INFRASTRUCTURE IMPROVEMENTS
FOR HANAPĒPĒ RESIDENTIAL LOTS, PHASE 2
TMK: (4) 1-8-007: 003 (PORTION) & (4) 2-8-007: 001 TO 050 (PORTION)
Hanapēpē, Waimea, Kaua'i, Hawai'i

GRADING SECTIONS - 2

THIS DOCUMENT CONTAINS INFORMATION PROPRIETARY TO SSFM INTERNATIONAL, INC., AND IS FURNISHED IN CONFIDENCE FOR THE LIMITED PURPOSE OF EVALUATION, BIDDING OR REVIEW. THIS DOCUMENT OR ITS CONTENTS MAY NOT BE USED FOR ANY OTHER PURPOSE AND MAY NOT BE REPRODUCED OR ADAPTED TO OTHERS WITHOUT THE PRIOR WRITTEN CONSENT OF SSFM INTERNATIONAL, INC.

DATE
NOVEMBER 2022

SHEET NUMBER
C-302
62 OF 109 SHEETS

W:_CIVIL 3D PROJECTS\2018_021.001 DHHL HANAPEPE RESIDENTIAL SUBDIVISION PHASE 2\01 CE DWG\C-302 GRADING SECTIONS - 2.DWG 11/8/2022 6:39 PM EBORNALES

PRINTED: 11/8/22

GENERAL NOTES FOR TRAFFIC CONTROL PLAN

1. THE PERMITTEE SHALL MAKE MINOR ADJUSTMENTS AT INTERSECTIONS, DRIVEWAYS, BRIDGES, STRUCTURES, ETC., TO FIT FIELD CONDITIONS.
2. CONES OR DELINEATORS SHALL BE EXTENDED TO A POINT WHERE THEY ARE VISIBLE TO APPROACHING TRAFFIC.
3. TRAFFIC CONTROL DEVICES SHALL BE INSTALLED SUCH THAT THE SIGN OR DEVICE FARTHEST FROM THE WORK AREA IS PLACED FIRST. THE OTHERS SHALL THEN BE PLACED PROGRESSIVELY TOWARD THE WORK AREA.
4. REGULATORY AND WARNING SIGNS WITHIN THE CONSTRUCTION ZONE THAT ARE IN CONFLICT WITH THE TRAFFIC CONTROL PLANS SHALL BE REMOVED OR COVERED.
5. FLAGGERS AND/OR POLICE OFFICERS SHALL BE IN SIGHT OF EACH OTHER OR IN DIRECT COMMUNICATION AT ALL TIMES.
6. WHEN REQUIRED BY THE ISSUING OFFICE, THE PERMITTEE SHALL INSTALL A FLASHING ARROW SIGNAL AS SHOWN ON THE TRAFFIC CONTROL PLANS.
7. ALL TRAFFIC LANES SHALL BE A MINIMUM OF 10 FEET WIDE.
8. ALL CONSTRUCTION WARNING SIGNS SHALL BE PROMPTLY REMOVED OR COVERED WHENEVER THE MESSAGE IS NOT APPLICABLE OR NOT IN USE.
9. THE BACKS OF ALL SIGNS USED FOR TRAFFIC CONTROL SHALL BE APPROPRIATELY COVERED TO PRECLUDE THE DISPLAY OF INAPPLICABLE SIGN MESSAGES (I.E., WHEN SIGNS HAVE MESSAGES ON BOTH FACES).
10. LANE CLOSURES SHALL BE LIMITED ONLY TO THE EXTENT OF ACCOMPLISHING EACH DAY'S WORK. AS SOON AS EACH DAY'S WORK IS COMPLETED, THE PERMITEE SHALL REMOVE ALL TRAFFIC CONTROL DEVICES NO LONGER NEEDED TO PERMIT FREE AND SAFE PASSAGE OF PUBLIC TRAFFIC. REMOVAL SHALL BE IN THE REVERSE ORDER OF INSTALLATION. EXISTING FADED OR OBLITERATED PAVEMENT MARKINGS THAT ARE NECESSARY FOR SAFE TRAFFIC FLOW IN THE CONSTRUCTION AREA SHALL BE REPLACED WITH TEMPORARY OR PERMANENT MARKINGS BEFORE OPENING THE ROADWAY TO PUBLIC TRAFFIC EACH DAY.
11. PERMANENT PAVEMENT MARKINGS AND TRAFFIC SIGNS SHALL BE REPLACED UPON COMPLETION OF EACH PHASE OF WORK.
12. CONES AND DELINEATORS SHALL BE SPACED AT A MAXIMUM DISTANCE OF 20 FEET APART. A MINIMUM OF SIX CHANNELIZING DEVICES SHALL BE USED FOR EACH TAPER LENGTH.
13. DRIVEWAYS SHALL BE KEPT OPEN UNLESS THE OWNERS OF THE PROPERTY USING THE DRIVEWAY ARE OTHERWISE PROVIDED FOR SATISFACTORILY. FURTHER, THE PERMITTEE SHALL CONTROL TRAFFIC GOING INTO AND OUT OF DRIVEWAYS.
14. BUFFER AND TAPER AREA ON APPROACH TO ANY WORK AREA SHALL BE KEPT CLEAR OF VEHICLES AND EQUIPMENT.
15. "NO PARKING" SIGNS SHALL BE POSTED WITHIN ANY WORK AREA AND FOR THE BUFFER AND TAPER AREAS APPROACHING THE WORK AREA.
16. TRAFFIC CONTROL PLANS ARE APPROVED FOR WORK ON ANY CITY STREET AREA ONLY BETWEEN THE HOURS OF 08:30 A.M. AND 03:30 P.M. (MONDAY–FRIDAY).

LEGEND

- ◦◦◦◦◦◦ CONES AT 10' O.C.
- SIGN
- ⇦ TRAFFIC DIRECTION
- WORK AREA
- ⊗ POLICE OFFICER / FLAGGER
- TYPE III BARRICADE

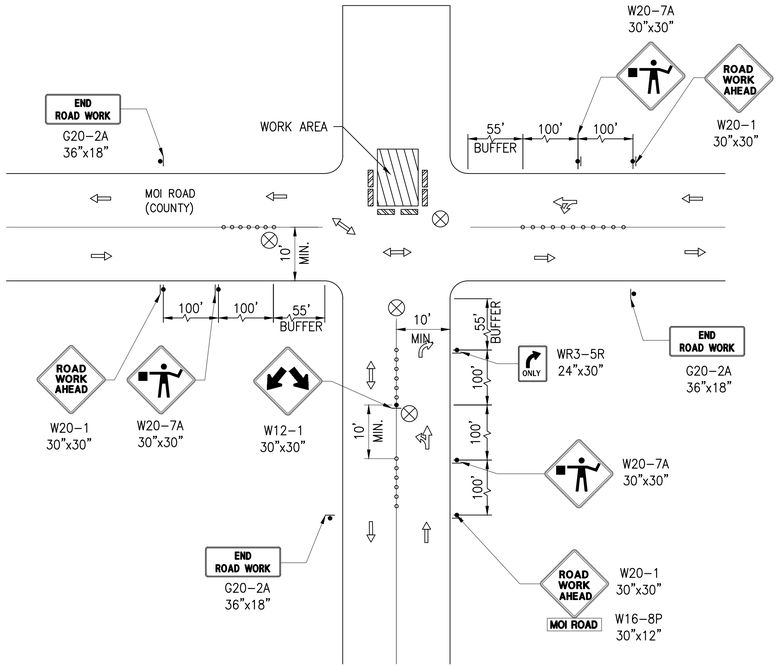

CLOSURE AT SOUTH BOUND LANE – MOI ROAD

NOT TO SCALE

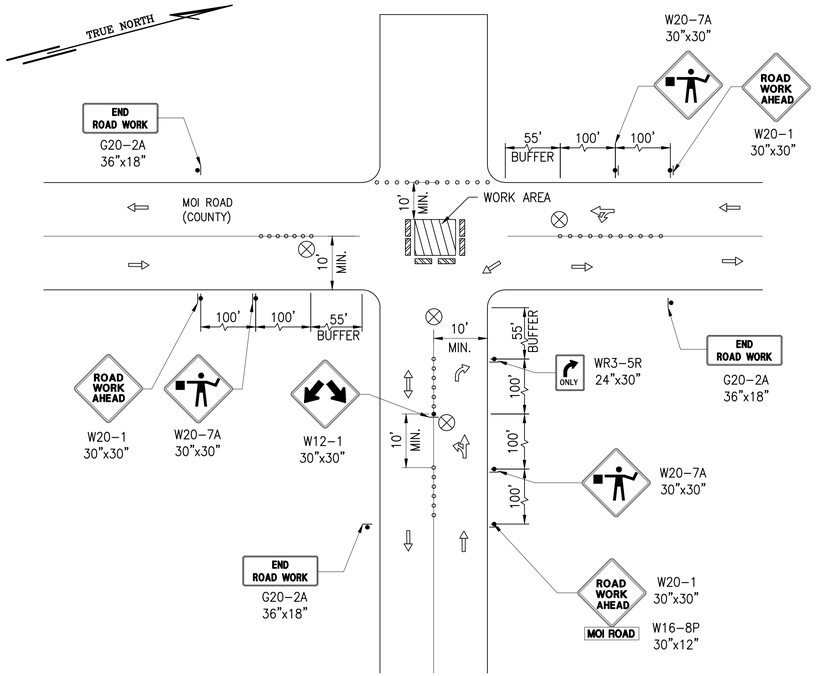

CLOSURE AT CENTER OF INTERSECTION – MOI ROAD

NOT TO SCALE

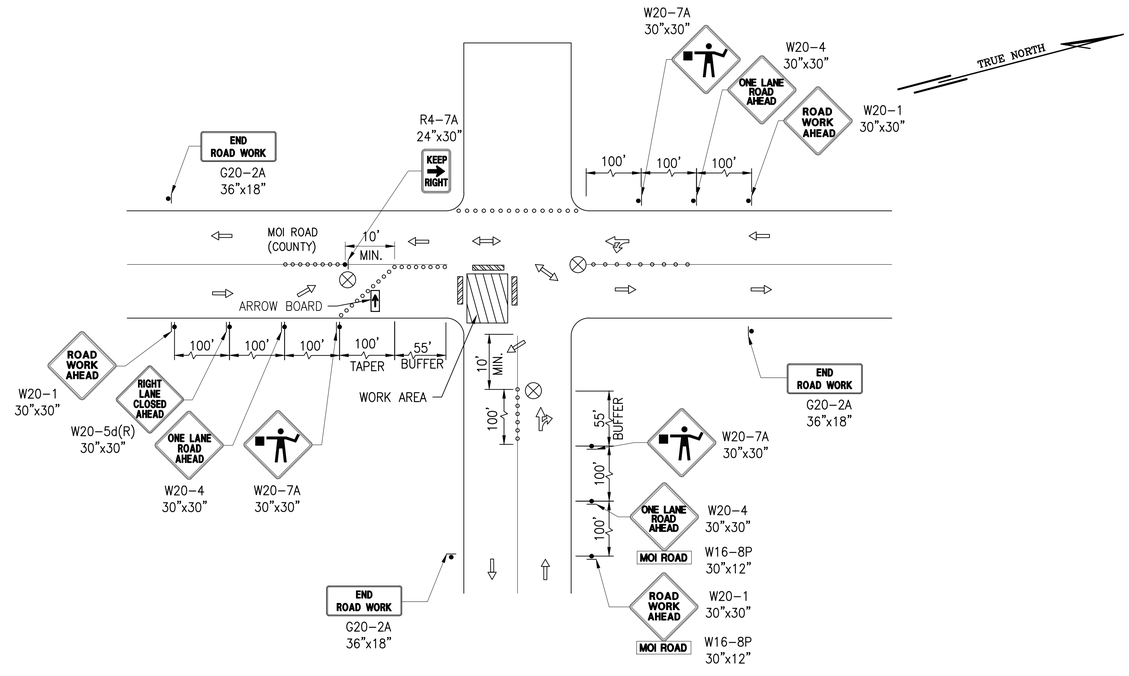

CLOSURE AT THE NORTH BOUND LANE – MOI ROAD

NOT TO SCALE

RICHARD Y. SANTO
LICENSED PROFESSIONAL ENGINEER
NO. 8955-C
HAWAII USA

This work was prepared by me or under my supervision and I am responsible for its contents. The use of my seal indicates my acceptance of professional responsibility only for the design shown and described hereon. 4/30/24 Date of Signature

NOTE: Contractor to check and verify dimensions at job before proceeding with work.

SSFM International, Inc.
501 Sumner Street
Suite 620
Honolulu, Hawaii 96817

REVISION	DATE	DESCRIPTION	MADE BY	APPROVED

PROJECT:
DEPARTMENT OF HAWAIIAN HOME LANDS
SITE AND INFRASTRUCTURE IMPROVEMENTS
FOR HANAPĒPĒ RESIDENTIAL LOTS, PHASE 2
TMK: (4) 1-8-007: 003 (PORTION) & (4) 2-8-007: 001 TO 050 (PORTION)
Hanapēpē, Waimea, Kaua'i, Hawai'i

TRAFFIC CONTROL PLAN

THIS DOCUMENT CONTAINS INFORMATION PROPRIETARY TO SSFM INTERNATIONAL, INC., AND IS FURNISHED IN CONFIDENCE FOR THE LIMITED PURPOSE OF EVALUATION, BIDDING OR REVIEW. THIS DOCUMENT OR ITS CONTENTS MAY NOT BE USED FOR ANY OTHER PURPOSE AND MAY NOT BE REPRODUCED OR DISCLOSED TO OTHERS WITHOUT THE PRIOR WRITTEN CONSENT OF SSFM INTERNATIONAL, INC.

DATE
NOVEMBER 2022

SHEET NUMBER
C-400
63 OF 109 SHEETS

W:_CIVIL 3D PROJECTS\2018_021.001 DHHL HANAPEPE RESIDENTIAL SUBDIVISION PHASE 2\01 CE DWG\C-400 TRAFFIC CONTROL PLAN.DWG 11/8/2022 6:42 PM EBORNALES

PRINTED: 11/8/22

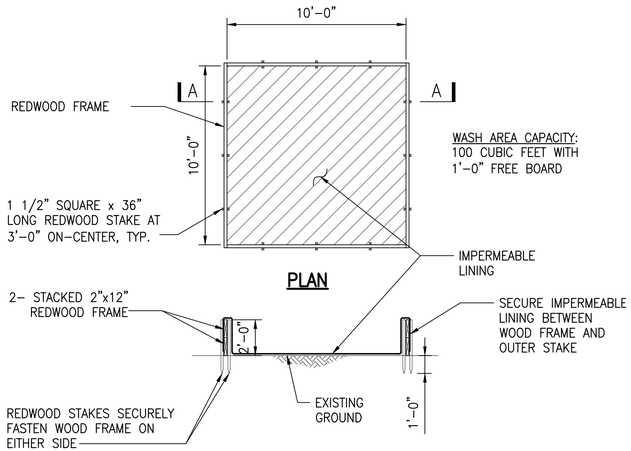

SECTION A-A

CONCRETE TRUCK WASH AREA NOTE:

THE CONCRETE WASH WATER WILL NOT BE ALLOWED TO OVERFLOW, AND WILL EITHER BE DISPOSED OF INTO AN APPROVED FACILITY IMMEDIATELY AFTER WASHING OPERATIONS, OR ALLOWED TO EVAPORATE AND THE REMAINDER REMOVED REGULARLY AND DISPOSED INTO AN APPROVED FACILITY TO AVOID BUILDUP OF CONCRETE MATERIAL WITHIN THE WASH AREA.

5 CONCRETE TRUCK WASH AREA DETAIL
C-501 NOT TO SCALE

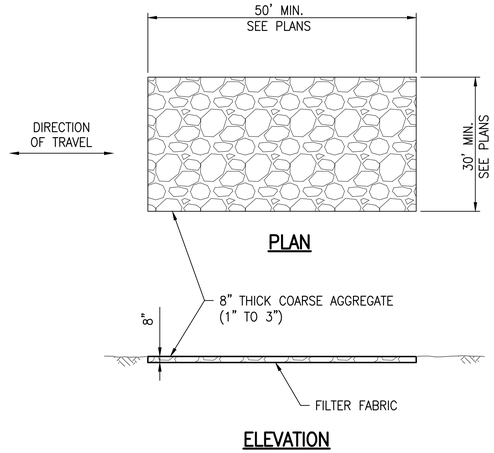

ELEVATION

3 CONSTRUCTION INGRESS/EGRESS DETAIL
C-501 NOT TO SCALE

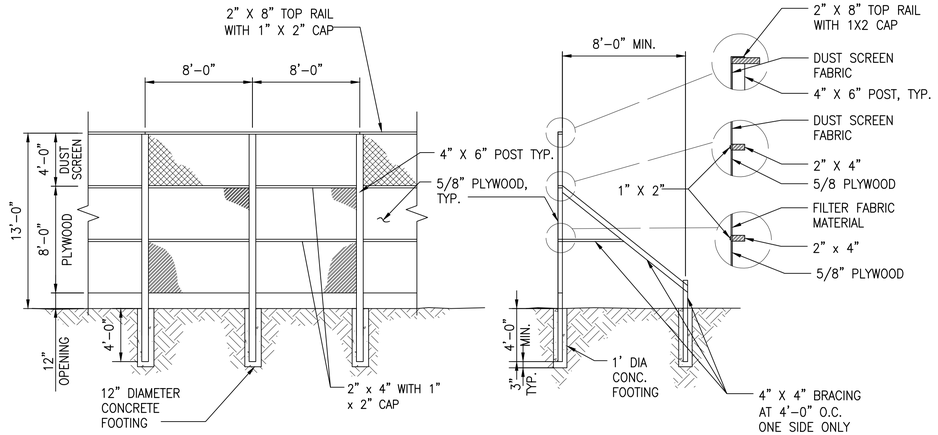

PLYWOOD BARRICADE FENCE NOTES:

1. DUST SCREEN BARRIER TO BE A "WOVEN GEOTEXTILE" OR "NURSERY SHADE"
2. LUMBER SHALL BE TERMITE TREATED DOUGLAS FIR-LARCH NO. 2 GRADE.
3. LUMBER SIZES ARE NOMINAL INCHES.
4. 1"x2" CLOTH BARRIER CAPS TO BE NAILED 12" O.C.
5. BURLAP IS NOT ACCEPTABLE AS THE CLOTH BARRIER.
6. CLOTH TO HAVE NO HORIZONTAL SEAMS.
7. VERTICAL SEAMS TO BE MADE OVER UPRIGHTS ONLY.
8. ALL SEAMS TO BE CAPPED WITH MINIMUM OF 1"X2".
9. ALL JOINTS TO BE SECURELY FASTENED BY MECHANICAL MEANS.
10. FOR FENCE ON EXISTING PAVEMENT, USE ALTERNATE BASE.
11. CONTRACTOR SHALL SUBMIT SHOP DRAWINGS FOR ALTERNATE BASE TO THE ENGINEER FOR REVIEW.
12. DUST SCREEN BARRIER MAY BE MOUNTED TO EXISTING CHAIN LINK FENCE IN LIEU OF PLYWOOD BARRICADE. CONTRACTOR TO PROVIDE SHOP DRAWINGS FOR ENGINEER TO REVIEW.

1 DUST FENCE DETAIL
C-501 NOT TO SCALE

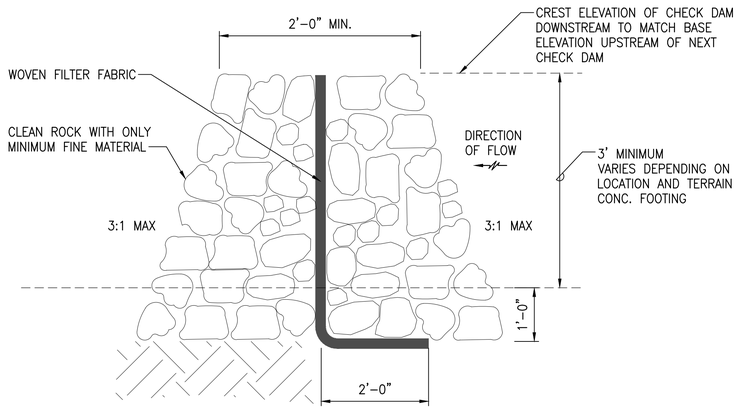

6 TEMPORARY ROCK CHECK DAM DETAIL
C-501 NOT TO SCALE

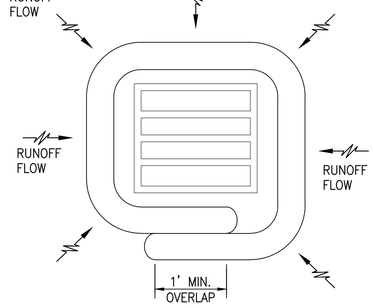

FILTER SOCK INLET PROTECTION

4 TERMPORARY DRAIN INLET PROTECTION DETAIL
C-501 NOT TO SCALE

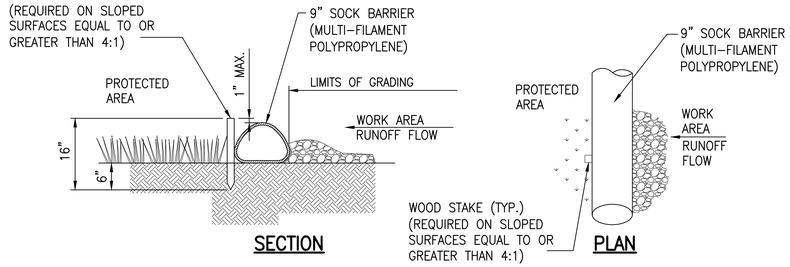

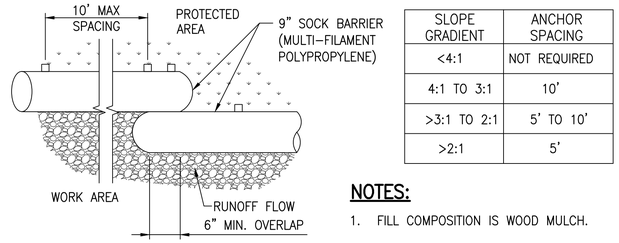

OVERLAP

SLOPE GRADIENT	ANCHOR SPACING
<4:1	NOT REQUIRED
4:1 TO 3:1	10'
>3:1 TO 2:1	5' TO 10'
>2:1	5'

NOTES:

1. FILL COMPOSITION IS WOOD MULCH.
2. FILL SHALL NOT CONTAIN BIOSOLIDS AND SHOULD BE CONSISTENT WITH EPA GUIDELINES.

2 FILTER SOCK DETAIL
C-501 NOT TO SCALE

RICHARD Y. SANTO
LICENSED PROFESSIONAL ENGINEER
NO. 8955-C
HAWAII USA

This work was prepared by me or under my supervision and is the property of SSFM International, Inc. and may not be used, reproduced, changed or assigned to any other person or entity without the expressed written authorization of SSFM International, Inc.

4/30/24
Signature Date

NOTE: Contractor to check and verify dimensions at job before proceeding with work.

SSFM International, Inc.
501 Sumner Street
Suite 620
Honolulu, Hawaii 96817

REVISION	DATE	DESCRIPTION	MADE BY	APPROVED

PROJECT:
DEPARTMENT OF HAWAIIAN HOME LANDS
SITE AND INFRASTRUCTURE IMPROVEMENTS
FOR HANAPĒPĒ RESIDENTIAL LOTS, PHASE 2
TMK: (4) 1-8-007: 003 (PORTION) & (4) 2-8-007: 001 TO 050 (PORTION)
Hanapēpē, Waimea, Kaua'i, Hawai'i

EROSION AND SEDIMENT CONTROL DETAILS

THIS DOCUMENT CONTAINS INFORMATION PROPRIETARY TO SSFM INTERNATIONAL, INC. AND IS FURNISHED IN CONFIDENCE FOR THE LIMITED PURPOSE OF EVALUATION, BIDDING OR REVIEW. THIS DOCUMENT OR ITS CONTENTS MAY NOT BE USED FOR ANY OTHER PURPOSE AND MAY NOT BE REPRODUCED OR DISCLOSED TO OTHERS WITHOUT THE PRIOR WRITTEN CONSENT OF SSFM INTERNATIONAL, INC.

DATE
NOVEMBER 2022

SHEET NUMBER
C-501
64 OF 109 SHEETS

W:_CIVIL 3D PROJECTS\2018_021.001 DHHL HANAPEPE RESIDENTIAL SUBDIVISION PHASE 2\01 CE DWG\C-501 EROSION AND SEDIMENT CONTROL DETAILS.DWG 11/7/2022 3:21 PM EBORNALES

PRINTED: 11/7/22

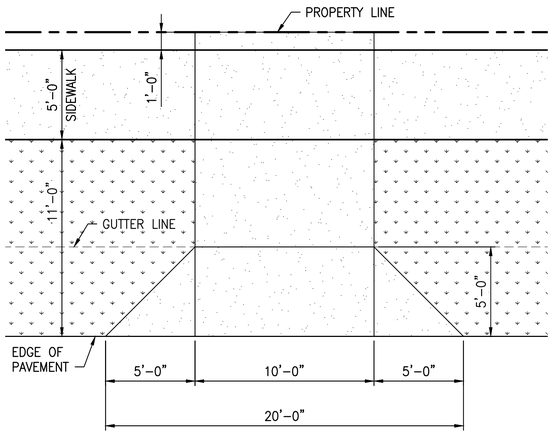

PLAN

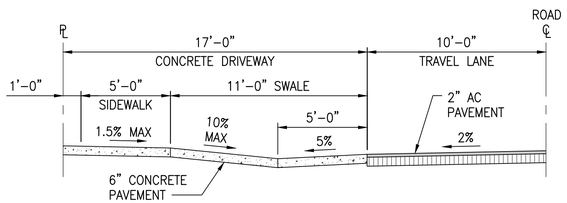

SECTION

NOTES:

1. 6" CONCRETE PAVEMENT – REINFORCED WITH 6"x6"–MW19xMW19 WWF OR CONCRETE REINFORCING ADDITIVE SHALL BE CONSTRUCTED.
2. PROVIDE CONSTRUCTION JOINTS AT EDGE PAVEMENT AND PROPERTY LINE.

7 C–502 TYPICAL CONCRETE DRIVEWAY DETAIL
NOT TO SCALE

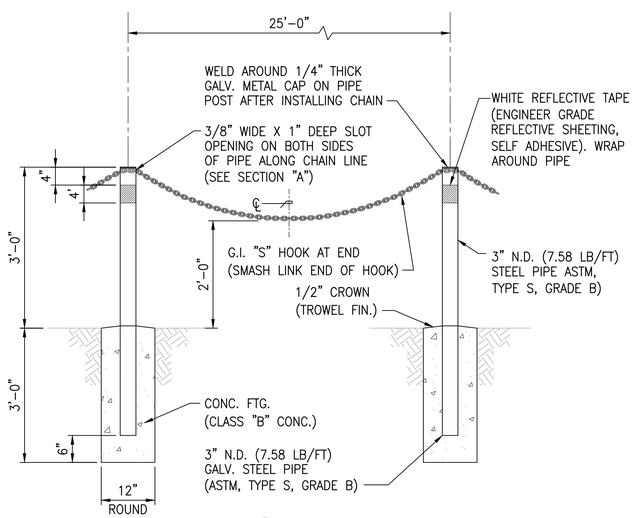

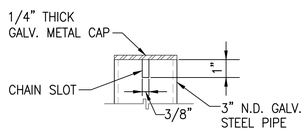

SECTION "A"

NOTES:

1. ALL WELDED CONNECTIONS SHALL BE PAINTED WITH TWO COATS OF Z.R.C. COLD GALVANIZING COMPOUND.
2. "S" HOOKS SHALL BE 5/16"ø WITH TIP TAPERED TO 3/16".
3. NO SPLICING SHALL BE ALLOWED ON G.I. PIPE POSTS.
4. ALL PIPE SIZES ARE NOMINAL DIAMETER (N.D.).

8 C–502 POST AND CHAIN BARRIER DETAIL
NOT TO SCALE

NOTES:

1. SAWCUT TRANSVERSE CONTRACTION JOINTS IN CONCRETE HEADER TO 1–1/2" DEPTH AT 5' O.C. FILL JOINTS WITH FUEL AND OIL RESISTANT JOINT SEALER.
2. IN AREAS INACCESSIBLE TO THE SAWCUTTING MACHINE, USE HAND TOOLS TO FORM THE CONTRACTION JOINT TO A DEPTH OF 1–1/2".

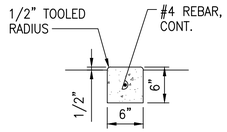

6"x6" HEADER

4 C–502 TYPICAL CONCRETE HEADER DETAIL
NOT TO SCALE

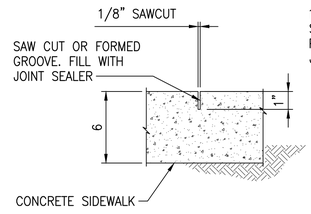

SAW CUT JOINT

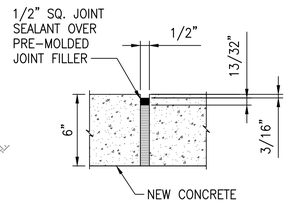

EXPANSION JOINT

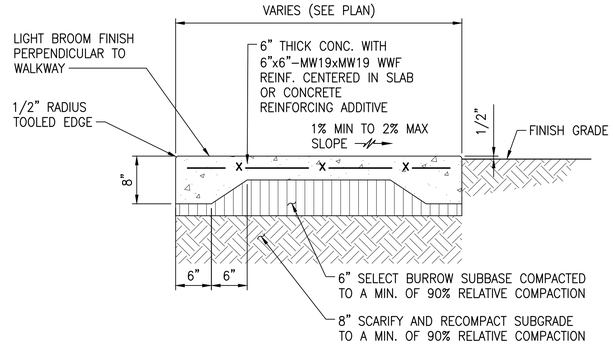

5 C–502 CONC. SIDEWALK DETAIL
NOT TO SCALE

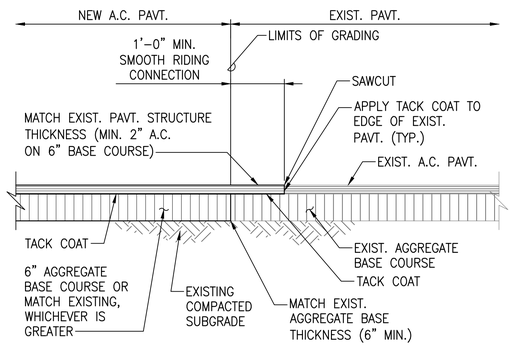

6 C–502 SMOOTH RIDING CONNECTION DETAIL
NOT TO SCALE

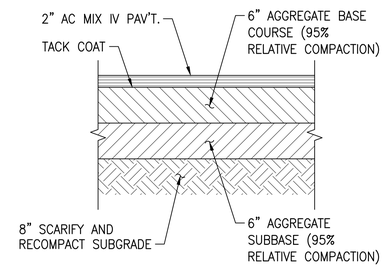

1 C–502 AC PAVEMENT DETAIL
NOT TO SCALE

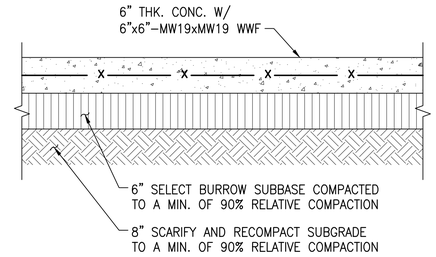

2 C–502 CONC. PAVEMENT DETAIL
NOT TO SCALE

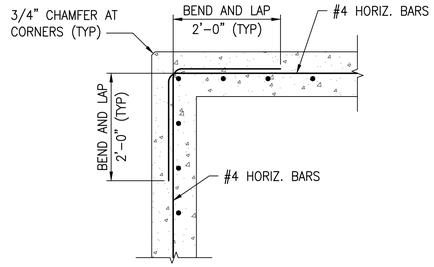

NOTE:
HORIZONTAL REINFORCEMENT WALLS MAY BE 1– #4 AT 24" O.C. IN LIEU OF DUR–O–WAL

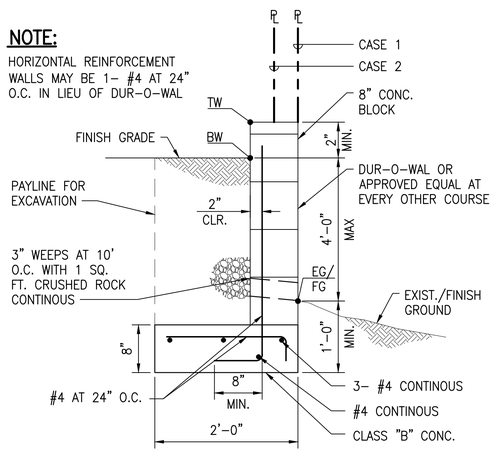

3 C–502 GRADE ADJUSTMENT WALL DETAIL
NOT TO SCALE

RICHARD Y. SANTO
LICENSED PROFESSIONAL ENGINEER
NO. 8955–C
HAWAII USA

This work was prepared by me or under my supervision and is the property of SSFM International, Inc. and may not be used in whole or in part without the written consent of SSFM International, Inc. Unauthorized use of these plans and specifications is prohibited. (Unauthorized use includes, but is not limited to, reproduction or modification of these plans and specifications for any purpose, and the preparation of derivative architectural works based on these plans and specifications.)

4/30/24
Date of Signature

NOTE: Contractor to check and verify dimensions at job before proceeding with work.

SSFM International, Inc.
501 Sumner Street
Suite 620
Honolulu, Hawaii 96817

REVISION	DATE	DESCRIPTION	MADE BY	APPROVED

PROJECT:
DEPARTMENT OF HAWAIIAN HOME LANDS
SITE AND INFRASTRUCTURE IMPROVEMENTS
FOR HANAPĒPĒ RESIDENTIAL LOTS, PHASE 2
TMK: (4) 1-8-007: 003 (PORTION) & (4) 2-8-007: 001 TO 050 (PORTION)
Hanapēpē, Waimea, Kaua'i, Hawai'i

CIVIL DETAILS - 1

THIS DOCUMENT CONTAINS INFORMATION PROPRIETARY TO SSFM INTERNATIONAL, INC., AND IS FURNISHED IN CONFIDENCE FOR THE LIMITED PURPOSE OF EVALUATION, BIDDING OR REVIEW. THIS DOCUMENT OR ITS CONTENTS MAY NOT BE USED FOR ANY OTHER PURPOSE AND MAY NOT BE DISCLOSED OR APPEAR IN PART OR IN WHOLE TO OTHERS WITHOUT THE PRIOR WRITTEN CONSENT OF SSFM INTERNATIONAL, INC.

DATE
NOVEMBER 2022

SHEET NUMBER
C-502

65 OF 109 SHEETS

W:_CIVIL 3D PROJECTS\2018_021.001 DHHL HANAPEPE RESIDENTIAL SUBDIVISION PHASE 2\01 CE DWG\C-502 CIVIL DETAILS - 1.DWG 10/27/2022 2:43 PM EBORNALES

PRINTED: 11/8/22

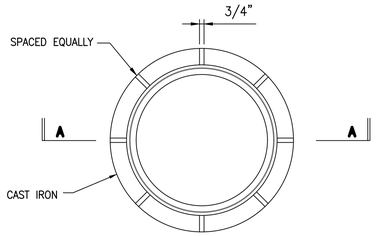

PLAN

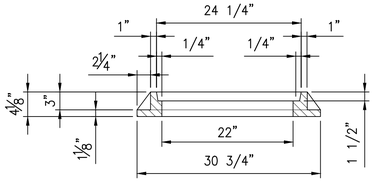

SECTION A–A

6 SDMH FRAME DETAIL – TYPE DA
C–503 NOT TO SCALE

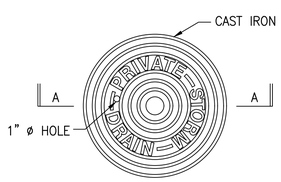

PLAN

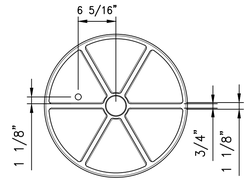

BOTTOM VIEW OF COVER

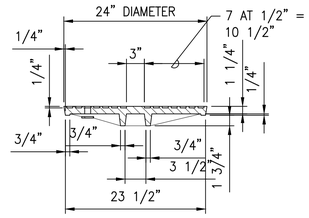

SECTION A–A

3 SDMH COVER DETAIL
C–503 NOT TO SCALE

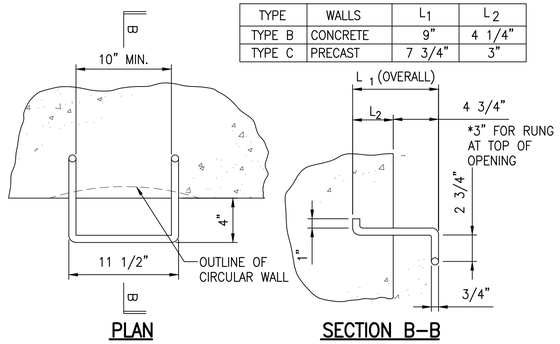

TYPE	WALLS	L_1	L_2
TYPE B	CONCRETE	9"	4 1/4"
TYPE C	PRECAST	7 3/4"	3"

PLAN SECTION B–B

NOTES:

1. RUNG SHALL BE 3/4" DIAMETER WROUGHT IRON OR ASTM A36 STEEL RODS AND SHALL BE HOT–DIPPED GALVANIZED OR CADMIUM PLATED AFTER BENDING.
2. ANY DEVIATION FROM THESE DETAILS MUST BE APPROVED BY THE CHIEF ENGINEER.

4 TYPE "B" RUNG DETAIL
C–503 NOT TO SCALE

POLLUTION STENCIL

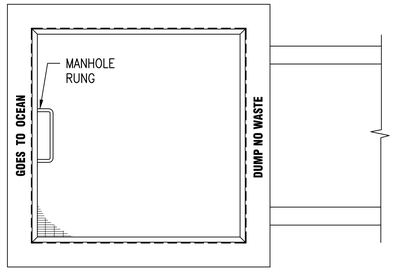

PLAN

1 STENCIL DETAIL
C–503 NOT TO SCALE

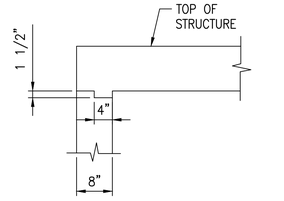

JOINT AT TOP

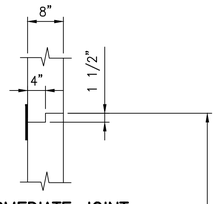

INTERMEDIATE JOINT

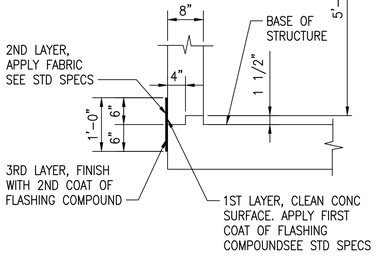

JOINT AT BASE

2 CONSTRUCTION JOINT DETAILS
C–503 NOT TO SCALE

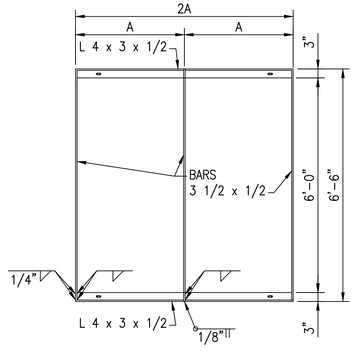

PLAN

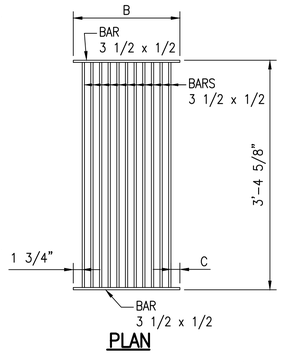

PLAN

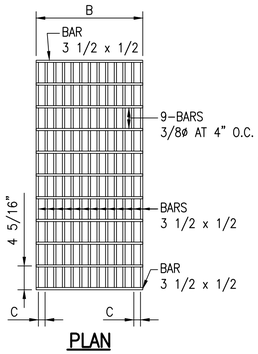

PLAN

NOTES:

1. ALL WELDS 3/8" UNLESS OTHERWISE NOTED.
2. GRATES AND FRAMES SHALL BE ZINC COATED AFTER FABRICATION.
3. ANCHORS SHALL BE ASTM A 307 AND ZINC COATED.

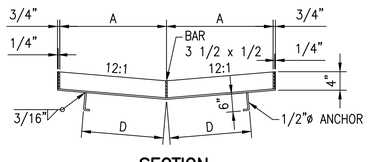

SECTION

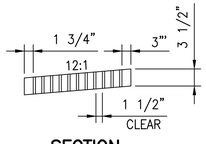

SECTION

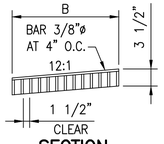

SECTION

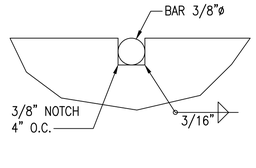

NOTCH DETAIL

5 MANHOLE FRAME AND GRATE DETAILS
C–503 NOT TO SCALE

RICHARD Y. SANTO
LICENSED PROFESSIONAL ENGINEER
NO. 8955–C
HAWAII USA

This work was prepared by me or under my supervision and I am licensed to practice in the State of Hawaii under the applicable State laws governing the practice of Professional Engineers, Architects, Surveyors, and Landscape Architects.

4/30/24
Date of Signature

NOTE: Contractor to check and verify dimensions at job before proceeding with work.

SSFM International, Inc.
501 Sumner Street
Suite 620
Honolulu, Hawaii 96817

REVISION	DATE	DESCRIPTION	MADE BY	APPROVED

PROJECT:
DEPARTMENT OF HAWAIIAN HOME LANDS
SITE AND INFRASTRUCTURE IMPROVEMENTS
FOR HANAPĒPĒ RESIDENTIAL LOTS, PHASE 2
TMK: (4) 1-8-007: 003 (PORTION) & (4) 2-8-007: 001 TO 050 (PORTION)
Hanapēpē, Waimea, Kaua'i, Hawai'i

DRAWING TITLE:
DRAINAGE DETAILS - 1

THIS DOCUMENT CONTAINS INFORMATION PROPRIETARY TO SSFM INTERNATIONAL, INC., AND IS FURNISHED IN CONFIDENCE FOR THE LIMITED PURPOSE OF EVALUATION, BIDDING OR REVIEW. THIS DOCUMENT OR ITS CONTENTS MAY NOT BE USED FOR ANY OTHER PURPOSE AND MAY NOT BE REPRODUCED OR DISCLOSED TO OTHERS WITHOUT THE PRIOR WRITTEN CONSENT OF SSFM INTERNATIONAL, INC.

DATE
NOVEMBER 2022

SHEET NUMBER
C-503
66 OF 109 SHEETS

W:_CIVIL 3D PROJECTS\2018_021.001 DHHL HANAPEPE RESIDENTIAL SUBDIVISION PHASE 2\01 CE DWG\C-503 DRAINAGE DETAILS - 1.DWG 11/8/2022 6:47 PM EBORNALES

PRINTED: 11/8/22

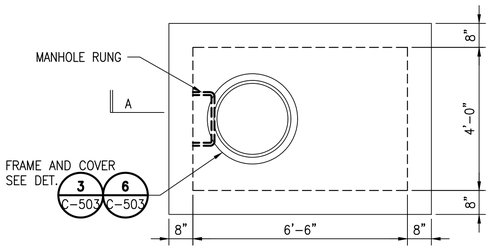

PLAN

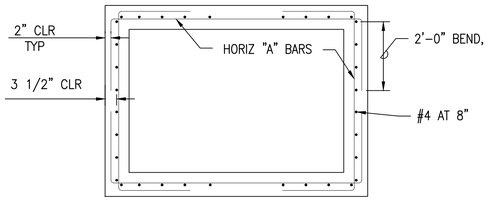

PLAN VIEW OF WALL SECTION

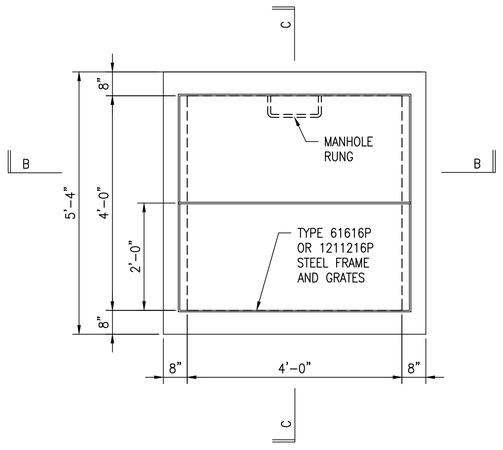

PLAN

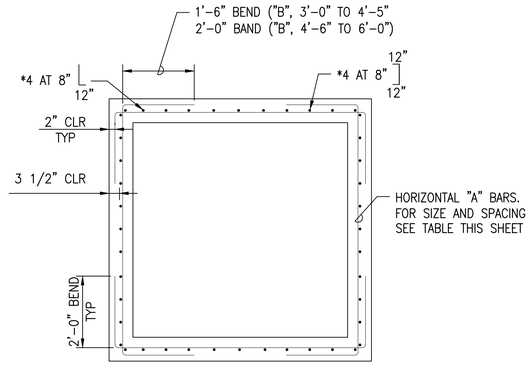

PLAN VIEW OF WALL REINFORCING

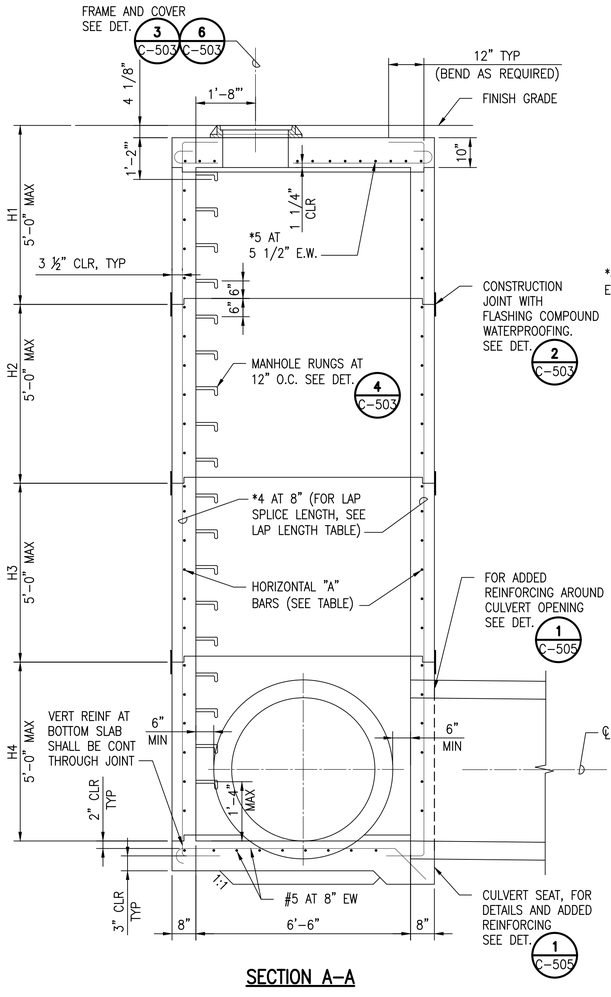

SECTION A–A

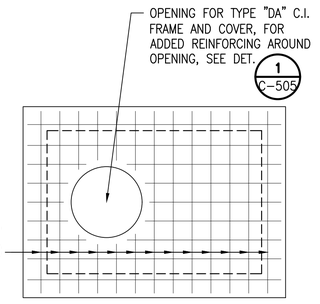

PLAN VIEW OF TOP SLAB REINFORCING

HORIZONTAL "A" BARS FOR FOR GRATED DROP INLET	
SDMH DEPTH	"A" BARS
H1 0'–0" TO 5'–0"	*5 @ 10"
H2 5'–1" TO 10'–0"	*5 @ 8"
H3'–10'–1" TO 15'–0"	*5 @ 6"
H4'–15'–1" TO 20'–0"	*5 @ 6"

VERTTICAL BAR LAP SPLICE	
BAR	VERTICAL LAP LENGTH
*4	1'–8"
*5	2'–2"

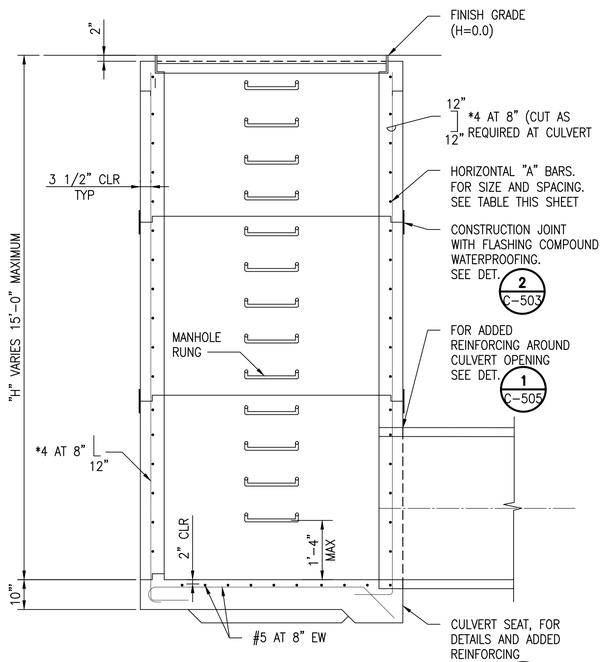

SECTION B–B

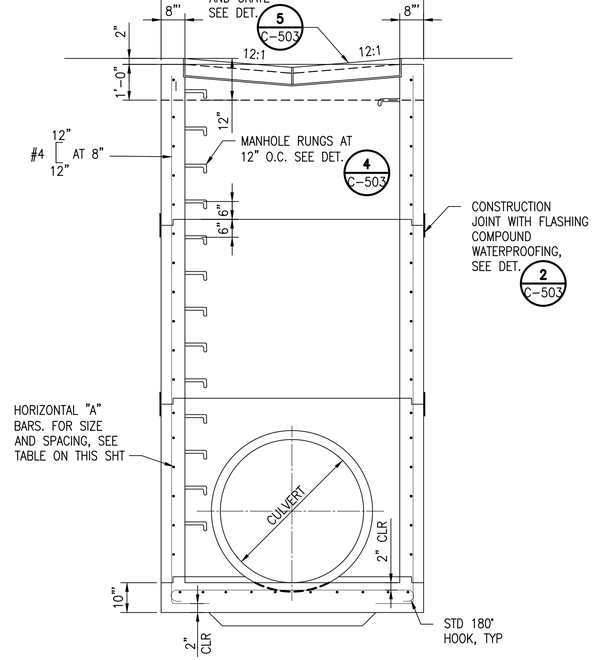

SECTION C–C

HORIZONTAL "A" BARS FOR FOR GRATED DROP INLET	
DEPTH "H"	"A" BARS
0'–0" TO 5'–0"	*5 @ 10"
5'–1" TO 10'–0"	*5 @ 8"
10'–1" TO 15'–0"	*5 @ 6"

2 C-504 STORM DRAIN MANHOLE DETAIL (FOR 66"ø)
NOT TO SCALE

1 C-504 GRATED DROP INLET DETAIL (FOR 36"ø MAX)
NOT TO SCALE

RICHARD Y. SANTO
LICENSED PROFESSIONAL ENGINEER
NO. 8955-C
HAWAII USA

This work was prepared by me or under my supervision and is not to be used in whole or in part for any construction unless it bears the original signature and seal of the Professional Engineer, Architect, Surveyor, and Landscape Architect.

4/30/24
expiration date of the license

NOTE: Contractor to check and verify dimensions at job before proceeding with work.

SSFM International, Inc.
501 Sumner Street
Suite 620
Honolulu, Hawaii 96817

REVISION	DATE	DESCRIPTION	MADE BY	APPROVED

PROJECT:
DEPARTMENT OF HAWAIIAN HOME LANDS
SITE AND INFRASTRUCTURE IMPROVEMENTS
FOR HANAPĒPĒ RESIDENTIAL LOTS, PHASE 2
TMK: (4) 1-8-007: 003 (PORTION) & (4) 2-8-007: 001 TO 050 (PORTION)
Hanapēpē, Waimea, Kaua'i, Hawai'i

DRAINAGE DETAILS - 2

THIS DOCUMENT CONTAINS INFORMATION PROPRIETARY TO SSFM INTERNATIONAL, INC. AND IS FURNISHED IN CONFIDENCE FOR THE LIMITED PURPOSE OF EVALUATION, BIDDING OR REVIEW. THIS DOCUMENT OR ITS CONTENTS MAY NOT BE USED FOR ANY PURPOSE OTHER THAN THAT AUTHORIZED BY SSFM INTERNATIONAL, INC. NOR MAY IT BE REPRODUCED OR DISCLOSED TO OTHERS WITHOUT THE PRIOR WRITTEN CONSENT OF SSFM INTERNATIONAL, INC.

DATE
NOVEMBER 2022

SHEET NUMBER
C-504
67 OF 109 SHEETS

W:_CIVIL 3D PROJECTS\2018_021.001 DHHL HANAPEPE RESIDENTIAL SUBDIVISION PHASE 2\01 CE DWG\C-504 DRAINAGE DETAILS - 2.DWG 11/4/2022 9:05 AM EBORNALES

PRINTED: 11/8/22

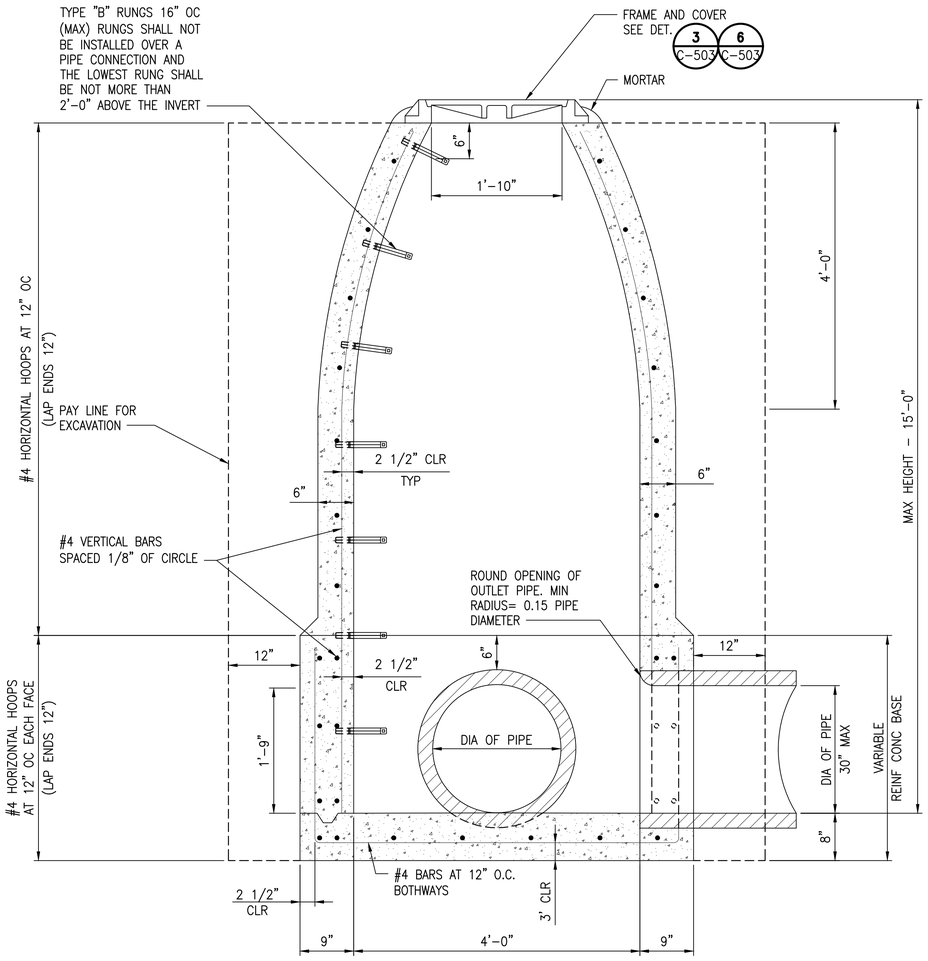

2 C-505 CAST-IN-PLACE CIRCULAR CONCRETE DRAIN MANHOLE

NOT TO SCALE

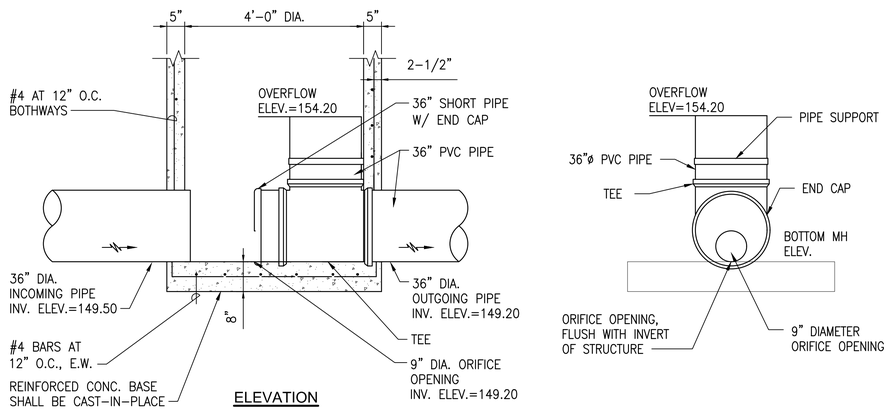

3 C-505 FLOW CONTROL MANHOLE DETAIL

NOT TO SCALE

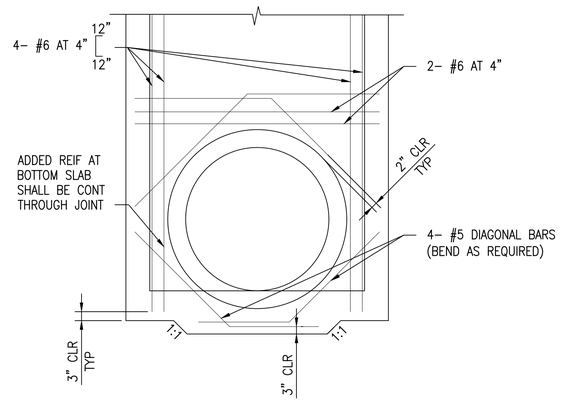

ADDED REINFORCING FOR CULVERT OPENINGS AT BOTTOM SLAB

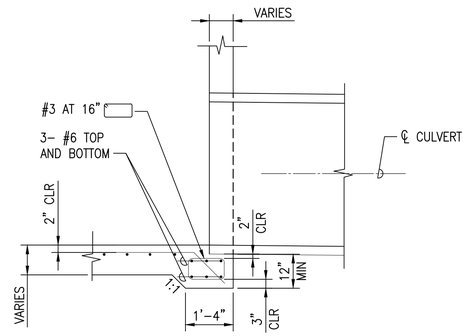

DETAIL OF CULVERT SEAT

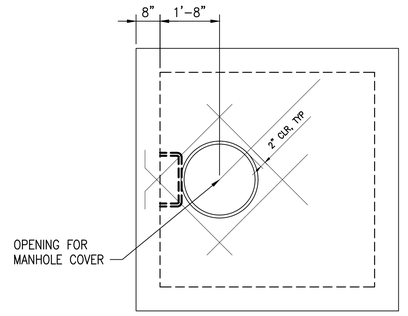

ADDED REINFORCING FOR MANHOLE OPENING

1 C-505 TYPICAL REINFORCING DETAILS FOR DRAINAGE STRUCTURES

NOT TO SCALE

RICHARD Y. SANTO LICENSED PROFESSIONAL ENGINEER NO. 8955-C HAWAII USA

This work was prepared by me or under my supervision and I am a duly licensed professional engineer in the State of Hawaii. (Block, title, date of expiration and number of professional engineer's certificate)

4/30/24

NOTE: Contractor to check and verify dimensions at job before proceeding with work.

SSFM International, Inc.
501 Sumner Street
Suite 620
Honolulu, Hawaii 96817

REVISION	DATE	DESCRIPTION	MADE BY	APPROVED

PROJECT:
DEPARTMENT OF HAWAIIAN HOME LANDS
SITE AND INFRASTRUCTURE IMPROVEMENTS
FOR HANAPĒPĒ RESIDENTIAL LOTS, PHASE 2
TMK: (4) 1-8-007: 003 (PORTION) & (4) 2-8-007: 001 TO 050 (PORTION)
Hanapēpē, Waimea, Kaua'i, Hawai'i

DRAINAGE DETAILS - 3

THIS DOCUMENT CONTAINS INFORMATION PROPRIETARY TO SSFM INTERNATIONAL, INC., AND IS FURNISHED IN CONFIDENCE FOR THE LIMITED PURPOSE OF EVALUATION, BIDDING OR REVIEW. THIS DOCUMENT OR ITS CONTENTS MAY NOT BE USED FOR ANY OTHER PURPOSE AND MAY NOT BE REPRODUCED OR DISCLOSED TO OTHERS WITHOUT THE PRIOR WRITTEN CONSENT OF SSFM INTERNATIONAL, INC.

DATE
NOVEMBER 2022

SHEET NUMBER
C-505
68 OF 109 SHEETS

W:_CIVIL 3D PROJECTS\2018_021.001 DHHL HANAPEPE RESIDENTIAL SUBDIVISION PHASE 2\01 CE DWG\C-505 DRAINAGE DETAILS - 3.DWG 11/8/2022 6:50 PM EBORNALES

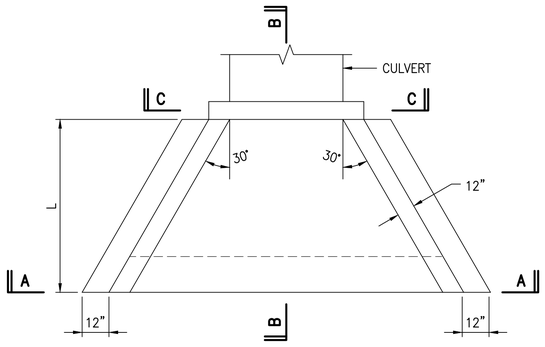

PLAN

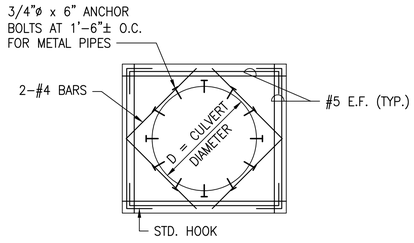

SECTION "C-C"

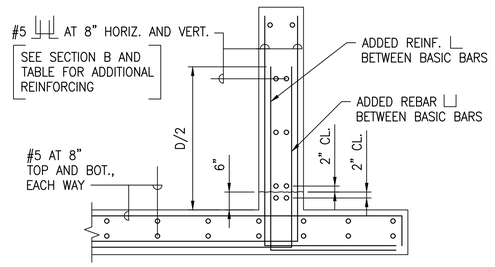

WING WALLS TYPICAL WING WALL REINFORCING SECTION

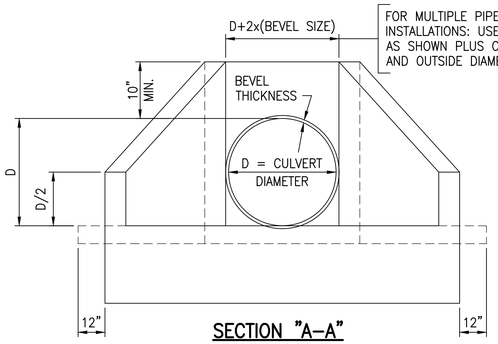

SECTION "A-A"

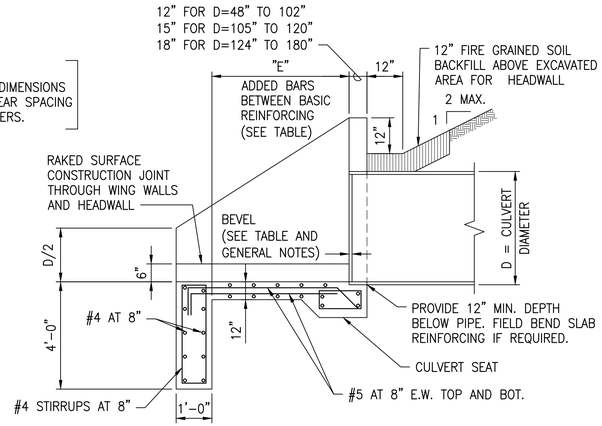

SECTION "B-B"

GENERAL NOTES:

1. CONSTRUCT BEVELS 1/2 IN./FT. OF CULVERT DIAMETER OR RISE.
2. THE GROOVE OR BELL END OF THE CONCRETE CULVERT MAY BE USED IN PLACE OF THE BEVELS.
3. ANCHOR BOLTS SHALL BE ASTM A307 AND ZINC COATED.
4. DESIGN CRITERIA
   a. ACTIVE HORIZONTAL PRESSURE =60 PCF (2 TO 1 SLOPING BACKFILL, ABOVE GROUNDWATER)
   b. ACTIVE VERTICAL PRESSURE =30 PCF (2 TO 1 SLOPING BACKFILL, ABOVE GROUNDWATER)
   c. STRENGTH BEARING CAPACITY =2,500 PSF
   d. INLET / OUTLET STRUCTURES WERE NOT DESIGNED FOR EXTREME EVENT LOAD COMBINATION.

CULVERT DIA. D (INCHES)	L (MIN.)
30	6'-0"
36	6'-6"
66	11'-0"

INLET/OUTLET STRUCTURE FOR CULVERT

1 C-506 CONCRETE HEADWALL DETAIL

NOT TO SCALE

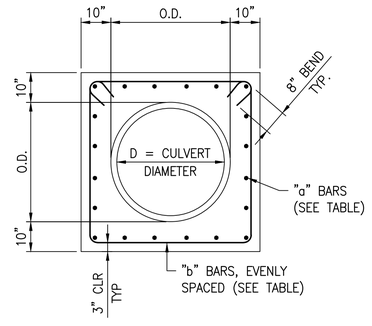

SECTION "A-A"

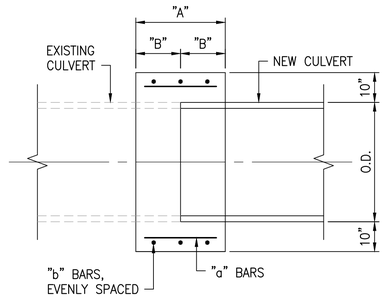

SECTION "B-B"

CULVERT DIAMETER	"a" BARS	"b" BARS	"A"	"B"
18" TO 30"	#4 AT 9"	3 - #4	24"	12"
36" TO 48"	#5 AT 9"	4 - #5	30"	15"
54" TO 66"	#5 AT 9"	4 - #5	30"	15"

2 C-506 REINFORCED CONCRETE COLLAR DETAIL

NOT TO SCALE

RICHARD Y. SANTO LICENSED PROFESSIONAL ENGINEER NO. 8955-C HAWAII USA

This work was prepared by me or under my supervision and I am a duly licensed professional engineer under the laws of the State of Hawaii, Board for Professional Engineers, Architects, Surveyors, and Landscape Architects. 4/30/24

NOTE: Contractor to check and verify dimensions at job before proceeding with work.

SSFM International, Inc.
501 Sumner Street
Suite 620
Honolulu, Hawaii 96817

REVISION	DATE	DESCRIPTION	MADE BY	APPROVED

PROJECT:
DEPARTMENT OF HAWAIIAN HOME LANDS
SITE AND INFRASTRUCTURE IMPROVEMENTS
FOR HANAPĒPĒ RESIDENTIAL LOTS, PHASE 2
TMK: (4) 1-8-007: 003 (PORTION) & (4) 2-8-007: 001 TO 050 (PORTION)
Hanapēpē, Waimea, Kaua'i, Hawai'i

DRAINAGE DETAILS - 4

THIS DOCUMENT CONTAINS INFORMATION PROPRIETARY TO SSFM INTERNATIONAL, INC., AND IS FURNISHED IN CONFIDENCE FOR THE LIMITED PURPOSE OF EVALUATION, BIDDING OR REVIEW. THIS DOCUMENT OR ITS CONTENTS MAY NOT BE USED FOR ANY OTHER PURPOSE AND MAY NOT BE PUBLISHED OR DISCLOSED TO OTHERS WITHOUT THE PRIOR WRITTEN CONSENT OF SSFM INTERNATIONAL, INC.

DATE
NOVEMBER 2022

SHEET NUMBER
C-506
69 OF 109 SHEETS

W:_CIVIL 3D PROJECTS\2018_021.001 DHHL HANAPEPE RESIDENTIAL SUBDIVISION PHASE 2\01 CE DWG\C-506 DRAINAGE DETAILS - 4.DWG 11/8/2022 6:50 PM EBORNALES

PRINTED: 11/8/22

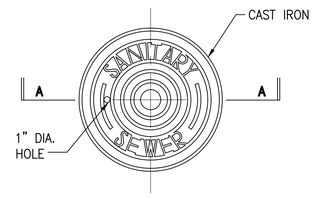

PLAN OF MANHOLE COVER

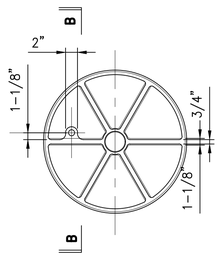

PLAN – COVER BOTTOM

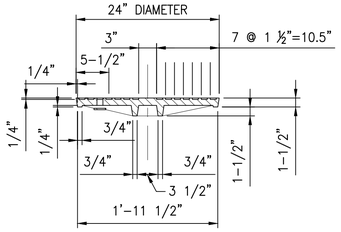

SECTION A–A

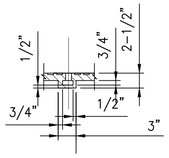

SECTION B–B

6 SEWER MH COVER DETAIL – TYPE SA

C-507 NOT TO SCALE

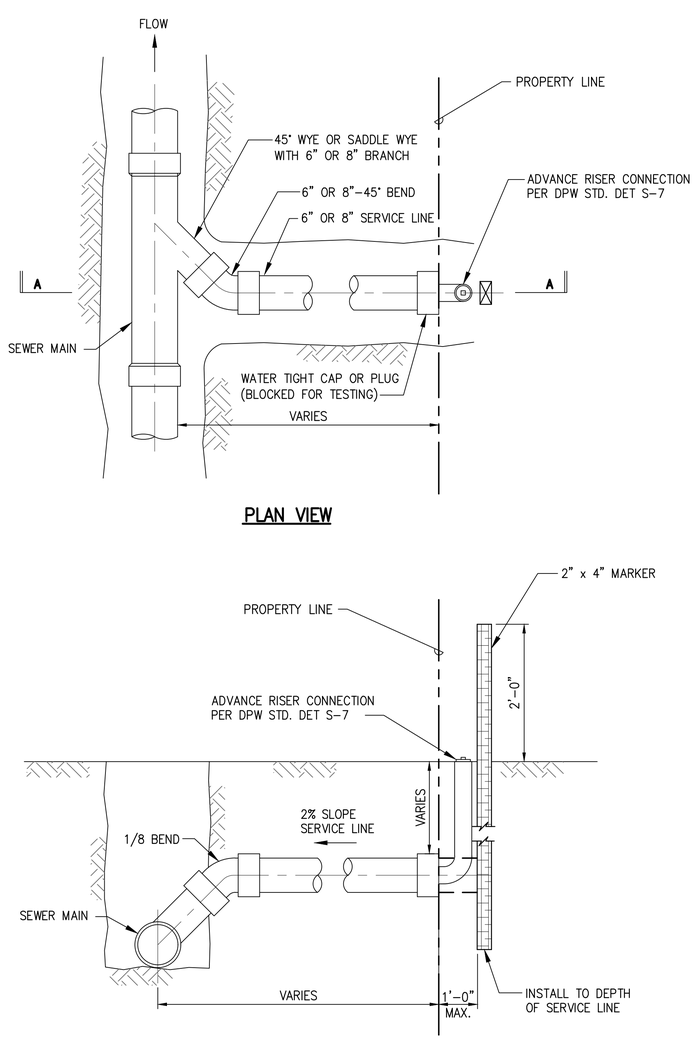

PLAN VIEW

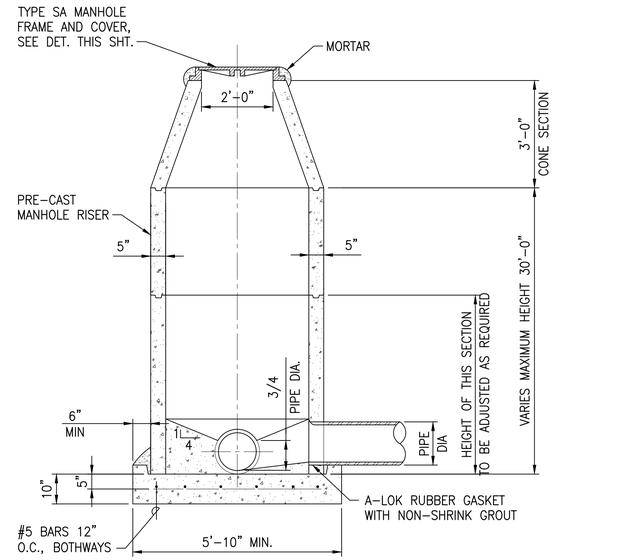

1 PRE–CAST CONCRETE SEWER MANHOLE DETAIL

C-507 NOT TO SCALE

SECTION A–A

4 SEWER LATERALS DETAIL

C-507 NOT TO SCALE

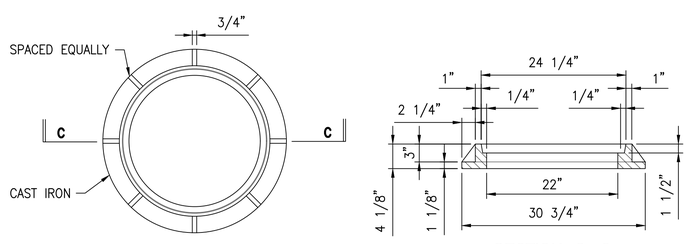

PLAN

SECTION C–C

2 SEWER MH FRAME DETAIL – TYPE SA

C-507 NOT TO SCALE

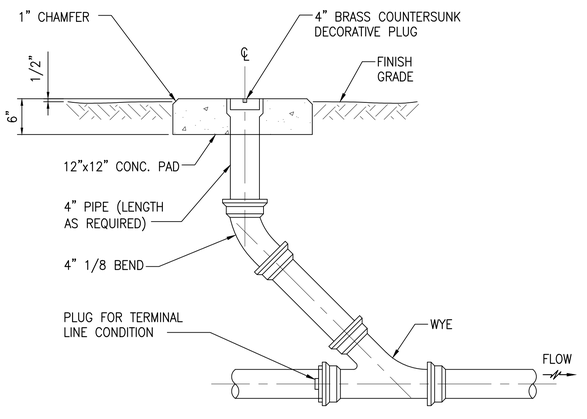

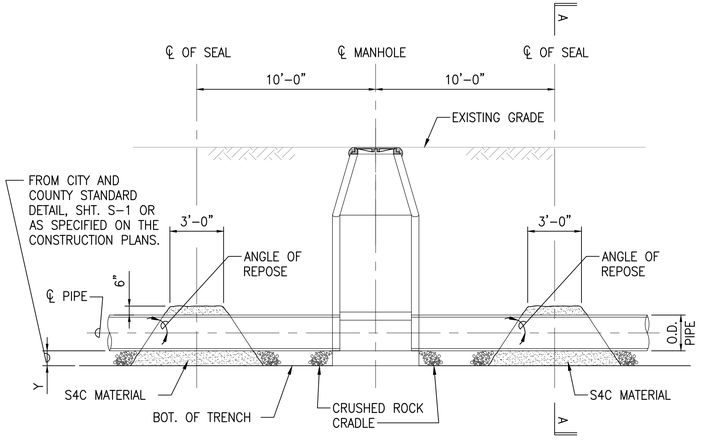

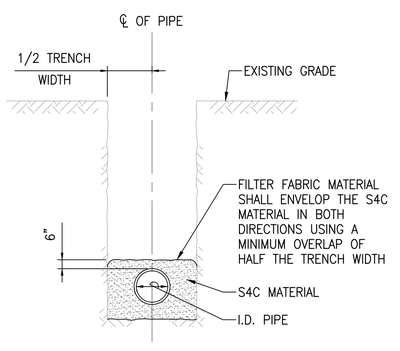

SECTION A–A

NOTES:

1. SEALS SHALL BE PLACED 10 FT. UPSTREAM AND DOWNSTREAM FROM EACH MANHOLE.
2. THE CONTRACTOR SHALL COMPACT S4C MATERIAL BY PONDING AND DRAINING. UPON DRAINING, A VIBRATORY MACHINE SHALL BE USED UNTIL NO VISIBLE EVIDENCE OF FURTHER CONSOLIDATION EXISTS.
3. SEALS SHALL NO BE PAID FOR SEPARATELY BUT SHALL BE CONSIDERED INCIDENTAL TO CRUSHED ROCK CRADLE.

7 SEAL DETAIL

C-507 NOT TO SCALE

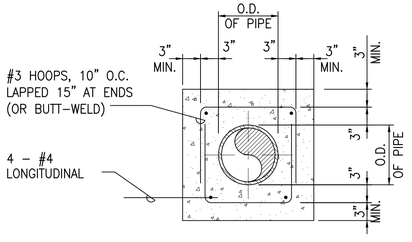

5 REINFORCED CONCRETE JACKET AROUND SEWERLINE DETAIL

C-507 NOT TO SCALE

3 CLEANOUT TO GRADE DETAIL

C-507 NOT TO SCALE

RICHARD Y. SANTO LICENSED PROFESSIONAL ENGINEER NO. 8955-C HAWAII USA

This work was prepared by me or under my supervision for the exclusive use of SSFM International, Inc. and its clients. Any use, modification, or publication by others is prohibited. Professional Engineers, Architects, Surveyors, and Landscape Architects Act, HRS Chapter 464. 4/30/24 Expiration date of the license

NOTE: Contractor to check and verify dimensions at job before proceeding with work.

SSFM International, Inc.
501 Sumner Street
Suite 620
Honolulu, Hawaii 96817

REVISION	DATE	DESCRIPTION	MADE BY	APPROVED

PROJECT:
DEPARTMENT OF HAWAIIAN HOME LANDS
SITE AND INFRASTRUCTURE IMPROVEMENTS
FOR HANAPĒPĒ RESIDENTIAL LOTS, PHASE 2
TMK: (4) 1-8-007: 003 (PORTION) & (4) 2-8-007: 001 TO 050 (PORTION)
Hanapēpē, Waimea, Kaua'i, Hawai'i

SEWER DETAILS - 1

THIS DOCUMENT CONTAINS INFORMATION PROPRIETARY TO SSFM INTERNATIONAL, INC., AND IS FURNISHED IN CONFIDENCE FOR THE LIMITED PURPOSE OF EVALUATION, BIDDING OR REVIEW. THIS DOCUMENT OR ITS CONTENTS MAY NOT BE USED FOR ANY OTHER PURPOSE AND MAY NOT BE REPRODUCED OR DISCLOSED TO OTHERS WITHOUT THE PRIOR WRITTEN CONSENT OF SSFM INTERNATIONAL, INC.

DATE
NOVEMBER 2022

SHEET NUMBER
C-507

70 OF 109 SHEETS

W:_CIVIL 3D PROJECTS\2018_021.001 DHHL HANAPEPE RESIDENTIAL SUBDIVISION PHASE 2\01 CE DWG\C-507 SEWER DETAILS - 1.DWG 11/8/2022 6:51 PM EBORNALES

PRINTED: 11/8/22

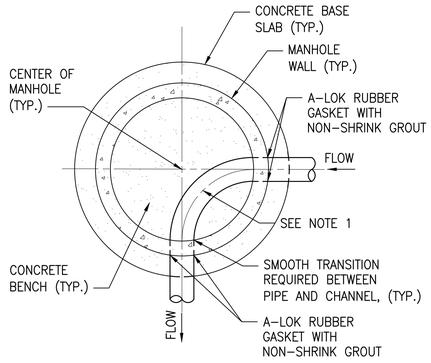

NEW MANHOLE

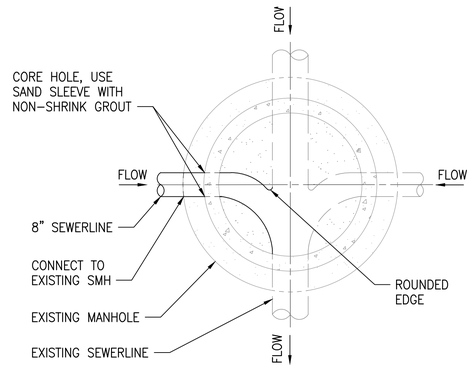

EXISTING MANHOLE

NOTES:

1. THE RADIUS OF THE CHANNEL CENTERLINE FOR PIPES SMALLER THAN 12" SHALL BE 1/2 X INSIDE DIAMETER OF MANHOLE.
2. ALL CHANNEL EDGES SHALL BE PROVIDED WITH SMOOTH ROUNDED EDGES.
3. OTHER MANHOLE CHANNEL CONFIGURATIONS SHALL BE SHOWN ON THE CONSTRUCTION DRAWINGS.

1 C-508 TYPICAL CHANNELIZATION OF SEWER MANHOLES DETAIL

NOT TO SCALE

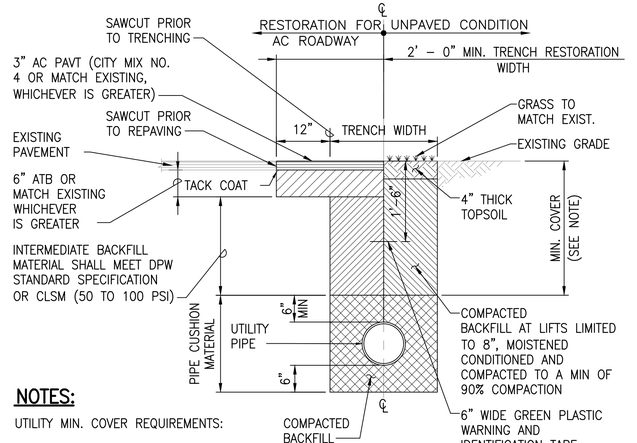

NOTES:

UTILITY MIN. COVER REQUIREMENTS:

SEWER:
- 4'-0" MIN. UNDER PAVED AREA
- 3'-0" MIN. UNDER SHOULDER OR UNPAVED AREA

2 C-508 TYPICAL TRENCH RESTORATION DETAIL

NOT TO SCALE

RICHARD Y. SANTO
LICENSED PROFESSIONAL ENGINEER
NO. 8955-C
HAWAII USA

This work was prepared by me or under my supervision and to the best of my knowledge and belief, the design of construction (Drawings, Specifications, Reports, Calculations, Plans, etc.) complies with applicable Professional Engineering, Architectural, Structural, and Landscape Architectural Laws of the State of Hawaii.

4/30/24
Expiration date of the license
Signature

NOTE: Contractor to check and verify dimensions at job before proceeding with work.

SSFM International, Inc.
501 Sumner Street
Suite 620
Honolulu, Hawaii 96817

REVISION	DATE	DESCRIPTION	MADE BY	APPROVED

PROJECT:
DEPARTMENT OF HAWAIIAN HOME LANDS
SITE AND INFRASTRUCTURE IMPROVEMENTS
FOR HANAPĒPĒ RESIDENTIAL LOTS, PHASE 2
TMK: (4) 1-8-007: 003 (PORTION) & (4) 2-8-007: 001 TO 050 (PORTION)
Hanapēpē, Waimea, Kaua'i, Hawai'i

SEWER DETAILS - 2

THIS DOCUMENT CONTAINS INFORMATION PROPRIETARY TO SSFM INTERNATIONAL, INC., AND IS FURNISHED IN CONFIDENCE FOR THE LIMITED PURPOSE OF EVALUATION, BIDDING OR REVIEW. THIS DOCUMENT OR ITS CONTENTS MAY NOT BE USED FOR ANY OTHER PURPOSE AND MAY NOT BE REPRODUCED OR DISCLOSED TO OTHERS WITHOUT THE PRIOR WRITTEN CONSENT OF SSFM INTERNATIONAL, INC.

DATE
NOVEMBER 2022

SHEET NUMBER
C-508

71 OF 109 SHEETS

W:_CIVIL 3D PROJECTS\2018_021.001 DHHL HANAPEPE RESIDENTIAL SUBDIVISION PHASE 2\01 CE DWG\C-508 SEWER DETAILS - 2.DWG 11/8/2022 6:45 PM EBORNALES

PRINTED: 11/8/22

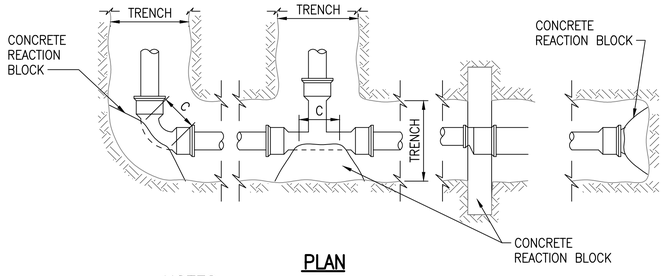

PLAN

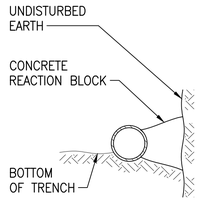

TYPICAL SECTION

NOTES:

1. CONCRETE REACTION BLOCKS SHALL BE INSTALLED AT ALL TEES, PLUGS, WYES AND BENDS.
2. CONCRETE SHALL BE DWS 2500.
3. ALL CONCRETE REACTION AND THRUST BLOCKS ARE DESIGNED FOR A MAXIMUM OPERATING PRESSURE 150 PSI.

MINIMUM BEARING AREAS (SQ. FT.) FOR HORIZONTAL THRUST BLOCKS								
PIPE SIZE	BEND	PRESSURE 150 PSI						
		A	B	C	D	E	F	G
6"	1/4	20.0	10.0	7.0	5.0	3.5	2.5	2.0
8"	TEES, CAPS	25.0	12.5	8.5	6.5	4.0	3.0	2.5
	1/4	35.0	18.0	12.0	9.0	6.0	4.5	3.5
	1/8	20.0	9.5	6.5	5.0	3.0	2.5	2.0
	1/32	5.0	2.5	1.5	1.5	1.0	1.0	1.0
12"	TEES, CAPS	34.0	17.0	11.5	8.5	5.5	4.5	3.5
	1/8	26.0	13.0	8.5	6.5	4.5	3.5	2.5
8" x 6" REDUCER		13.0	13.0	8.0	8.0	8.0	8.0	8.0

1 C-509 THRUST BLOCK DETAIL

NOT TO SCALE

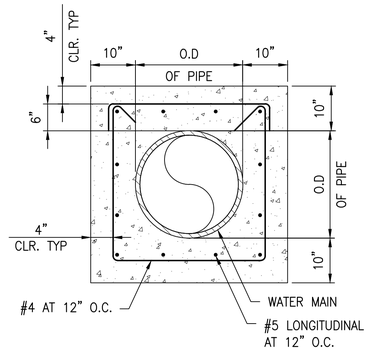

2 C-509 REINFORCED CONCRETE JACKET AROUND WATERLINE DETAIL

NOT TO SCALE

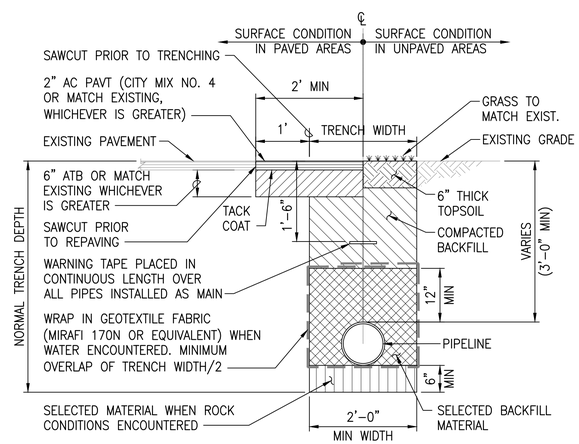

3 C-509 TYPICAL WATER LINE TRENCH DETAIL

NOT TO SCALE

APPROVED:

FOR MANAGER AND CHIEF ENGINEER, DEPT. OF WATER COUNTY OF KAUA'I — DATE

RICHARD Y. SANTO
LICENSED PROFESSIONAL ENGINEER
NO. 8955-C
HAWAII USA

This work was prepared by me or under my supervision and I certify that to the best of my knowledge, the design is in accordance with the applicable standard of care. (Hawaii Revised Statutes, Chapter 464, Professional Engineers, Architects, Surveyors, and Landscape Architects)

4/30/24
Date of Signature

NOTE: Contractor to check and verify dimensions at job before proceeding with work.

SSFM International, Inc.
501 Sumner Street
Suite 620
Honolulu, Hawaii 96817

REVISION	DATE	DESCRIPTION	MADE BY	APPROVED

PROJECT:
DEPARTMENT OF HAWAIIAN HOME LANDS
SITE AND INFRASTRUCTURE IMPROVEMENTS
FOR HANAPĒPĒ RESIDENTIAL LOTS, PHASE 2
TMK: (4) 1-8-007: 003 (PORTION) & (4) 2-8-007: 001 TO 050 (PORTION)
Hanapēpē, Waimea, Kaua'i, Hawai'i

WATER DETAILS - 1

THIS DOCUMENT CONTAINS INFORMATION PROPRIETARY TO SSFM INTERNATIONAL, INC. AND IS FURNISHED IN CONFIDENCE FOR THE LIMITED PURPOSE OF EVALUATION, BIDDING OR REVIEW. THIS DOCUMENT OR ITS CONTENTS MAY NOT BE USED FOR ANY OTHER PURPOSE AND MAY NOT BE DISCLOSED OR DISCUSSED TO OTHERS WITHOUT THE PRIOR WRITTEN CONSENT OF SSFM INTERNATIONAL, INC.

DATE
NOVEMBER 2022

SHEET NUMBER
C-509

72 OF 109 SHEETS

W:_CIVIL 3D PROJECTS\2018_021.001 DHHL HANAPEPE RESIDENTIAL SUBDIVISION PHASE 2\01 CE DWG\C-509 WATER DETAILS - 1.DWG 11/8/2022 2:41 PM EBORNALES

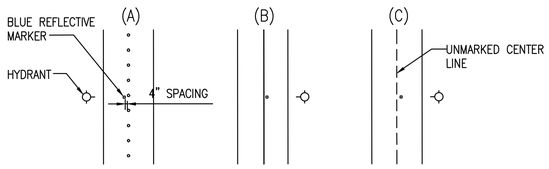

FIGURE 1
TWO LANE STREET

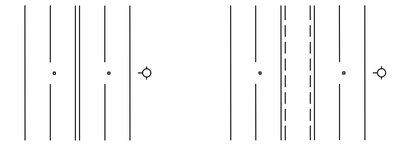

FIGURE 2
DIVIDED STREET

FIGURE 3
MULTI-LANE STREET W/ TURN LANE

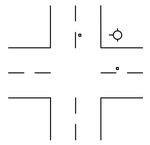

FIGURE 4
TWO LANE STREET @ INTERSECTION

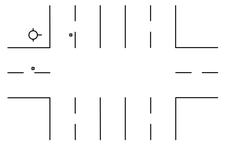

FIGURE 5
FOUR LANE STREET W/ TURN LANE @ INTERSECTION

HYDRANT MARKER LOCATION

STANDARD HEIGHT FOR HYDRANT ELBOW
30"
36"
42"
48"

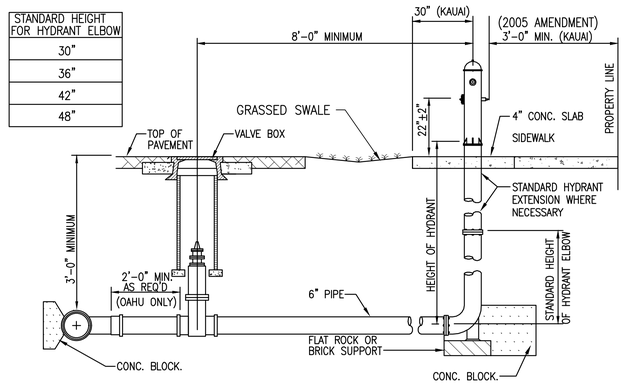

SECTION

NOTE:

IF MULTIPLE HYDRANT EXTENSIONS ARE USED, A MINIMUM OF THE TOP 3 FLANGE JOINTS SHALL USE BREAK-OFF BOLTS.

STANDARD HYDRANT EXTENSIONS ARE AVAILABLE IN THE FOLLOWING LENGTHS: 6 TO 30 INCHES LONG IN INCREMENTS OF 6 INCHES.

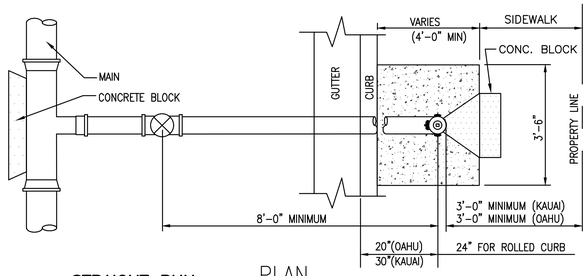

STRAIGHT RUN PLAN

NOTES:

1. GASKETS FOR FLANGED JOINTS SHALL BE 1/8" DUCK-INSERTED RUBBER PACKING GARLOCK NO. 19.
2. BOLTS SHALL BE BREAK-OFF TYPE, 5/8" DIA. x 3" LONG MACHINE BOLTS WITH CUT THREADS, AMERICAN STANDARD COARSE HEXAGON HEADS, HOT DIPPED GALVANIZED STEEL OR SILICON BRONZE. INSTALL BOLT WITH THREADS FACING UP.
3. NUTS SHALL BE AMERICAN STANDARD HEAVY COLD PUNCHED HEXAGON NUTS, HOT DIPPED GALVANIZED STEEL OR SILICON BRONZE.
4. CONCRETE SHALL BE DWS 2500.
5. REFER TO PLATE FH11 FOR FIRE HYDRANT INSTALLATION WITH CURB GUARD.
6. FLANGED OUTLET FOR THE TEE IS OPTIONAL FOR OAHU; MANDATORY FOR KAUA'I AND MAUI.
7. TAPPING SLEEVE WITH TAPPING VALVE ASSEMBLY MAY BE USED FOR CONNECTION TO EXISTING MAIN.
8. LUBRICATE HYDRANT NOZZLE THREADS WITH NON-TOXIC GREASE.
9. PROVIDE SLOTTED FLANGED RISER FOR HYDRANT AS NEEDED TO ALIGN 4-1/2" NOZZLE PERPENDICULAR TO CURB. (FOR MAUI ONLY)
10. INSTALL HYDRANT MARKERS. (SEE DETAIL ON THIS SHEET)

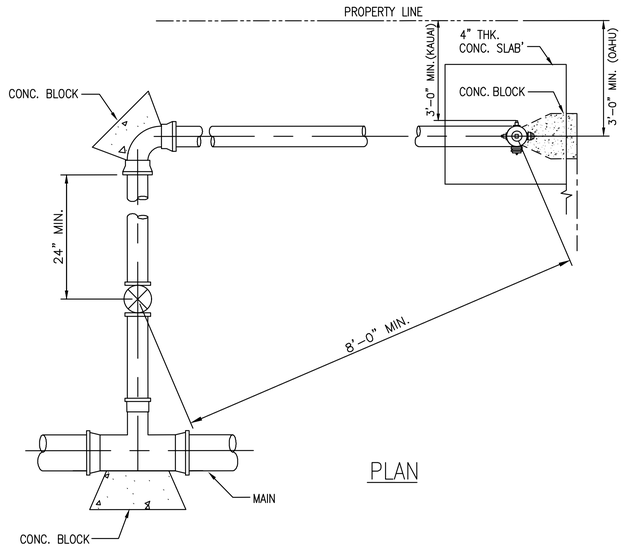

PLAN

NOTES:

1. MINIMUM DIRECT DISTANCE FROM FIRE HYDRANT TO GATE VALVE SHALL BE 8'-0".
2. REFER TO PLATE FH4 FOR DIMENSIONS OF 4" CONCRETE SLAB AROUND FIRE HYDRANT.
3. IF MULTIPLE HYDRANT EXTENSIONS ARE USED, A MINIMUM OF THE TOP 3 FLANGE JOINTS SHALL USE BREAK-OFF BOLTS.

WITH ELBOW

3 FIRE HYDRANT MARKER DETAIL
C-510 NOT TO SCALE (REV. 2002)

APPROVED:

FOR MANAGER AND CHIEF ENGINEER, DEPT. OF WATER COUNTY OF KAUA'I — DATE

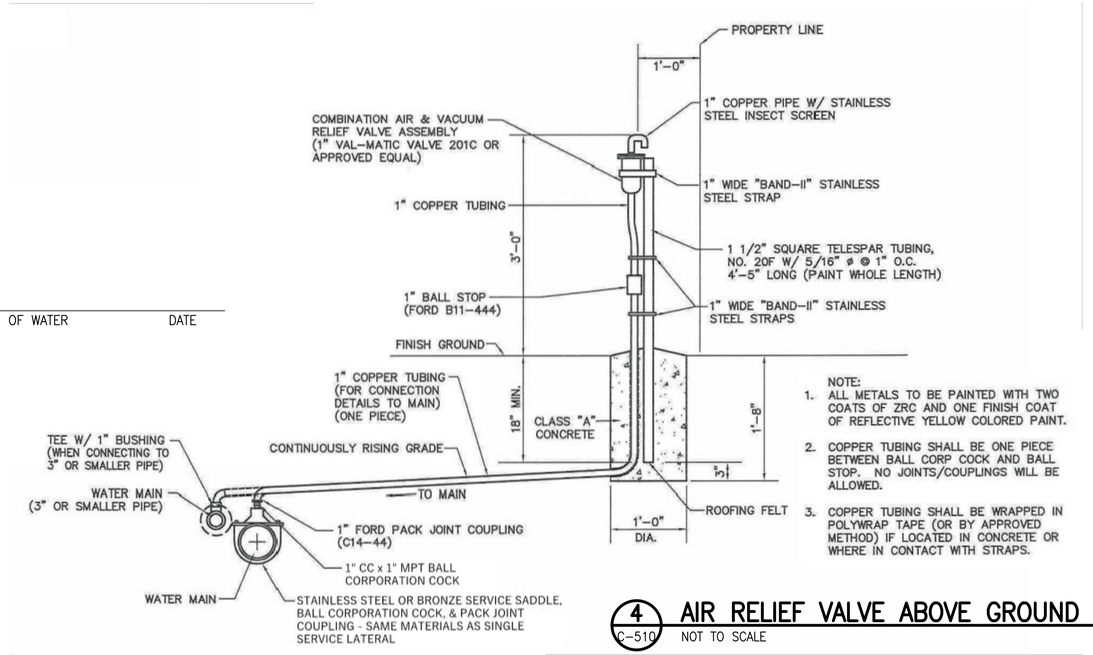

NOTE:
1. ALL METALS TO BE PAINTED WITH TWO COATS OF ZRC AND ONE FINISH COAT OF REFLECTIVE YELLOW COLORED PAINT.
2. COPPER TUBING SHALL BE ONE PIECE BETWEEN BALL CORP COCK AND BALL STOP. NO JOINTS/COUPLINGS WILL BE ALLOWED.
3. COPPER TUBING SHALL BE WRAPPED IN POLYWRAP TAPE (OR BY APPROVED METHOD) IF LOCATED IN CONCRETE OR WHERE IN CONTACT WITH STRAPS.

4 AIR RELIEF VALVE ABOVE GROUND DETAIL
C-510 NOT TO SCALE

1 FIRE HYDRANT CONECTION DETAIL
C-510 NOT TO SCALE (REV. 2002)

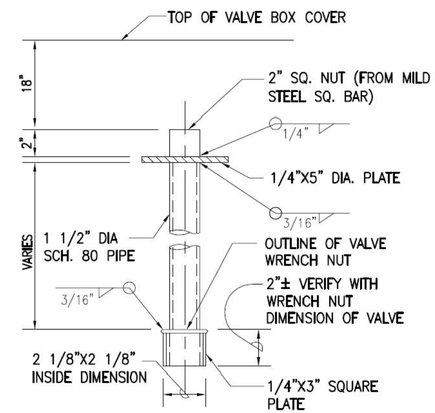

NOTE:
1. FURNISH AND INSTALL VALVE EXTENSION TO 18" FROM TOP OF VALVE BOX COVER.
2. VALVE EXTENSION SHALL BE HOT-DIPPED GALVANIZED AFTER FABRICATION.
3. FOR VALVE OPERATORS DEEPER THAN 3.5' TO FINISH GRADE.

2 VALVE NUT EXTENSION DETAIL
C-510 NOT TO SCALE

RICHARD Y. SANTO
LICENSED PROFESSIONAL ENGINEER
NO. 8955-C
HAWAII USA

This work was prepared by me or under my supervision. Any use of this work shall be at my or my client's sole risk and without liability to me or my consultants. Distribution of Engineering Materials, Services, and Instruments of Professional Engineers Architects, Surveyors, and Landscape Architects)

4/30/24
Date of Signature

NOTE: Contractor to check and verify dimensions at job before proceeding with work.

SSFM International, Inc.
501 Sumner Street
Suite 620
Honolulu, Hawaii 96817

REVISION	DATE	DESCRIPTION	MADE BY	APPROVED

PROJECT:
DEPARTMENT OF HAWAIIAN HOME LANDS
SITE AND INFRASTRUCTURE IMPROVEMENTS
FOR HANAPĒPĒ RESIDENTIAL LOTS, PHASE 2
TMK: (4) 1-8-007: 003 (PORTION) & (4) 2-8-007: 001 TO 050 (PORTION)
Hanapēpē, Waimea, Kaua'i, Hawai'i

WATER DETAILS - 2

THIS DOCUMENT CONTAINS INFORMATION PROPRIETARY TO SSFM INTERNATIONAL, INC. AND IS FURNISHED IN CONFIDENCE FOR THE LIMITED PURPOSE OF EVALUATION, BIDDING OR REVIEW. THIS DOCUMENT OR ITS CONTENTS MAY NOT BE USED FOR ANY OTHER PURPOSE AND MAY NOT BE DISCLOSED OR APPEAR IN PRINT TO OTHERS WITHOUT THE PRIOR WRITTEN CONSENT OF SSFM INTERNATIONAL, INC.

DATE
NOVEMBER 2022

SHEET NUMBER
C-510

73 OF 109 SHEETS

W:_CIVIL 3D PROJECTS\2018_021.001 DHHL HANAPEPE RESIDENTIAL SUBDIVISION PHASE 2\01 CE DWG\C-510 WATER DETAILS - 2.DWG 11/11/2022 1:30 PM EBORNALES

PRINTED: 11/11/22

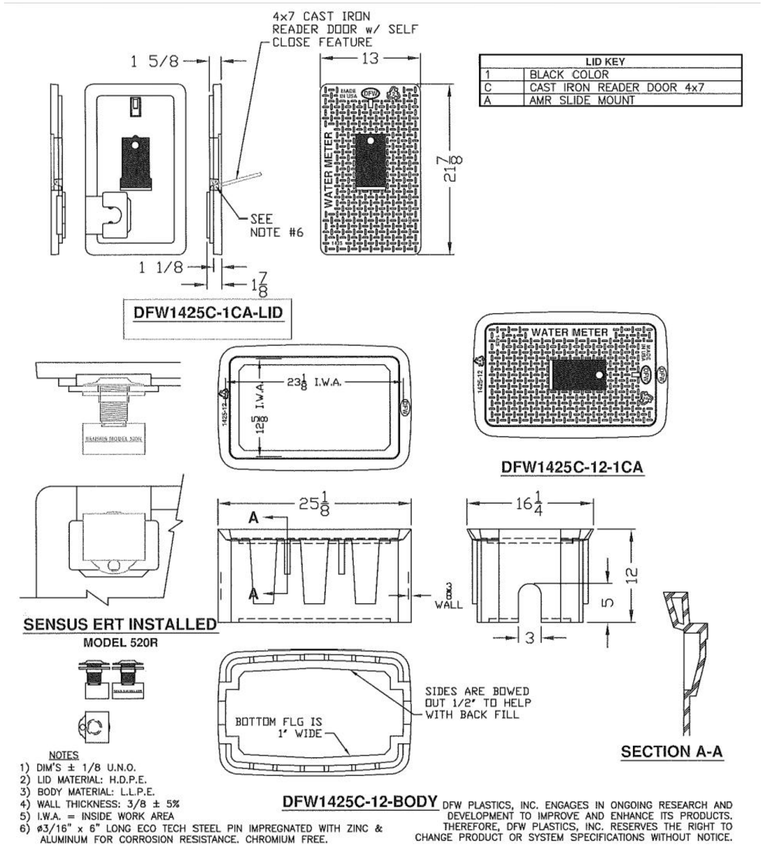

3 WATER METER BOX & COVER DETAIL
C-511 NOT TO SCALE

ITEM	SCHEDULE OF FITTINGS DESCRIPTION	DOUBLE SERVICE
A	STAINLESS STEEL OR BRONZE SADDLE W/ 1-1/2" CC TAP FOR C-900 PVC PIPE AND DUCTILE IRON PIPE	1
B	1-1/2" CC x 1-1/2" MPT BALL CORPORATION	1
C	PACK JOINT COUPLING (FORD C14-66 OR APPROVED EQUAL)	1
D	1-1/2" COPPER TUBE, TYPE "K" SOFT	2
E	1" 90° COPPER ELBOW, S x S	2
F	1" COPPER MALE ADAPTER, S x T	2
G	ANGLE BALL VALVE, 1" FEMALE IPT INLET x 3/4" METER COUPLING NUT OUTLET (FORD BA13-342W OR APPROVED EQUAL)	2
H	METER SPACER, SUPPLIED BY DEPT. OF WATER & INSTALLED BY CONTRACTOR	2
I	BALL VALVE W/ HANDLE, 3/4" METER COUPLING NUT INLET x 1" FEMALE IPT OUTLET (FORD B13-342 W/ HT-34 HANDLE OR APPROVED EQUAL)	2
J	LINESETTER, 1" COPPER TUBE, TYPE "K" SOFT, 12" LONG (SEE STD. DET. L3)	2
K	1" PLASTIC THREAD PROTECTOR	2
L	TYPE "X" POLYMER BOW W/ POLYMER COVER W/ 4x7 CAST IRON READER DOOR DFW1425C-12-1CA OR APPROVED EQUAL	2
M	1" x 1" x 1-1/2" COPPER TEE, S x S x S	1
N	TEE W/ 1-1/2" BUSHING (WHEN CONNECTING TO 3" OR SMALLER PIPE)	1

NOTE:
COPPER SERVICE LATERALS SHALL BE ENCASED WITH POLYETHYLENE WRAP FROM THE CONNECTION TO THE WATER MAIN TO THE ANGLE BALL VALVE LOCATED IN THE METER BOX.

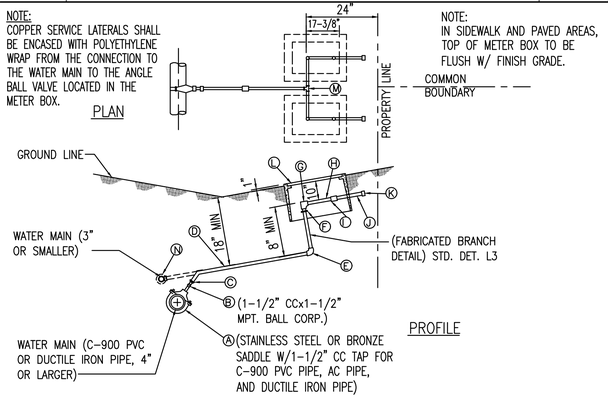

2 DOUBLE SERVICE LATERAL DETAIL
C-511 NOT TO SCALE

ITEM	SCHEDULE OF FITTINGS DESCRIPTION	SINGLE SERVICE
A	STAINLESS STEEL OR BORNZE SADDLE W/ 1" CC TAP FOR C-900 PVC PIPE D.I. PIPE	1
B	1" CC x 1" MPT BALL CORPORATION	1
C	PACK JOINT COUPLINGS (FORD C14-44 OR APPROVED EQUAL)	1
D	1" COPPER TUBE, TYPE "K" SOFT	1
E	1" 90° COPPER ELBOW, S x S	1
F	1" COPPER MALE ADAPTER, SXT	1
G	ANGLE BALL VALVE, 1" FEMALE IPT INLET x 3/4" METER COUPLING NUT OUTLET (FORD BA13-342W OR APPROVED EQUAL)	1
H	METER SPACER, SUPPLIED BY DEPT. OF WATER & INSTALLED BY CONTRACTOR	1
I	BALL VALVE W/ HANDLE, 3/4" METER COUPLING NUT INLET x 1" FEMALE IPT OUTLET (FORD B13-342 W/ HT-34 HANDLE OR APPROVED EQUAL)	1
J	LINESETTER, 1" COPPER TUBE, TYPE "K" SOFT, 12" LONG (SEE STD. DET. L3)	1
K	1" PLASTIC THREAD PROTECTOR	1
L	TYPE "X" POLYMER BOW W/ POLYMER COVER W/ 4x7 CAST IRON READER DOOR DFW1425C-12-1CA OR APPROVED EQUAL	1
M	TEE W/ 1" BUSHING (WHEN CONNECTING TO 3" OR SMALLER PIPE)	1

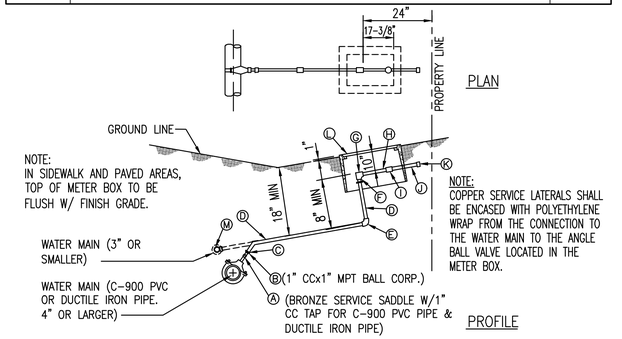

1 SINGLE SERVICE LATERAL DETAIL
C-511 NOT TO SCALE

APPROVED:

FOR MANAGER AND CHIEF ENGINEER, DEPT. OF WATER COUNTY OF KAUA'I — DATE

RICHARD Y. SANTO
LICENSED PROFESSIONAL ENGINEER
NO. 8955-C
HAWAII USA

This work was prepared by me or under my supervision and I am responsible for its accuracy. The signature below is valid only for the stamped plans and the Professional Engineer certifies, furthermore, that he/she is in responsible charge of the work as defined in the Hawaii Administrative Rules.
4/30/24
Signature — Date — Expiration of the license

NOTE: Contractor to check and verify dimensions at job before proceeding with work.

SSFM International
SSFM International, Inc.
501 Sumner Street
Suite 620
Honolulu, Hawaii 96817

REVISION	DATE	DESCRIPTION	MADE BY	APPROVED

PROJECT:
DEPARTMENT OF HAWAIIAN HOME LANDS
SITE AND INFRASTRUCTURE IMPROVEMENTS
FOR HANAPĒPĒ RESIDENTIAL LOTS, PHASE 2
TMK: (4) 1-8-007: 003 (PORTION) & (4) 2-8-007: 001 TO 050 (PORTION)
Hanapēpē, Waimea, Kaua'i, Hawai'i

WATER DETAILS - 3

THIS DOCUMENT CONTAINS INFORMATION PROPRIETARY TO SSFM INTERNATIONAL, INC., AND IS FURNISHED IN CONFIDENCE FOR THE LIMITED PURPOSE OF EVALUATION, BIDDING OR REVIEW. THIS DOCUMENT OR ITS CONTENTS MAY NOT BE USED FOR ANY OTHER PURPOSE AND MAY NOT BE DISCLOSED OR FURNISHED TO OTHERS WITHOUT THE PRIOR WRITTEN CONSENT OF SSFM INTERNATIONAL, INC.

DATE
NOVEMBER 2022

SHEET NUMBER
C-511
74 OF 109 SHEETS

PRINTED: 11/7/22

W:_CIVIL 3D PROJECTS\2018_021.001 DHHL HANAPEPE RESIDENTIAL SUBDIVISION PHASE 2\01 CE DWG\C-511 WATER DETAILS - 3.DWG 11/4/2022 5:21 PM EBORNALES

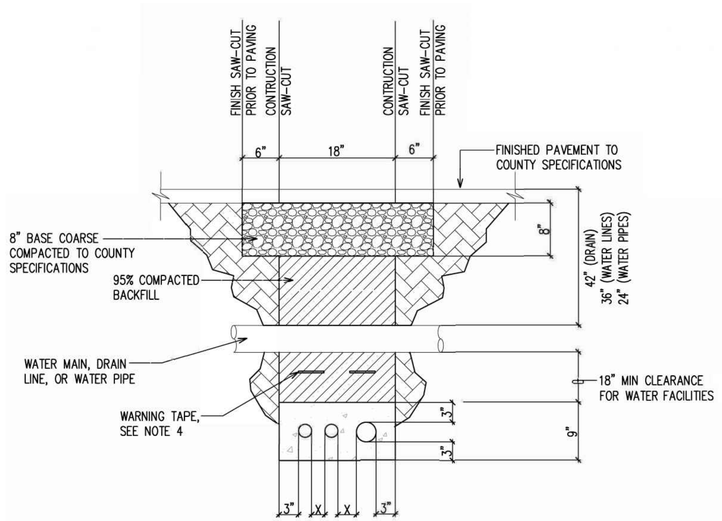

WATER NOTES:

1. THE CONTRACTOR SHALL VERIFY IN THE FIELD THE LOCATION OF THE EXISTING WATER FACILITIES PRIOR TO TRENCHING. EXCAVATION AROUND EXISTING WATER FACILITIES SHALL BE DONE BY HAND.
2. BACKFILL AROUND WATER PIPE CROSSING OVER UTILITY DUCTS SHALL MATCH BACKFILL AROUND WATER PIPE NOT CROSSING UTILITY DUCTS. BACKFILL SHALL NOT CONTAIN VEGETABLE MATTER, DEBRIS OF ANY KIND, ROCKS, STONES, ETC.
3. UTILITY DUCTS SHALL BE CONCRETE ENCASED AT ALL WATER FACILITIES CROSSINGS. AT INTERSECTION OF WATER PIPE AND UTILITY DUCTS, A 18" MINIMUM SEPARATION BETWEEN WATER PIPE AND TOP OF CONCRETE ENCASING UTILITY DUCTS SHALL BE MAINTAINED. CONTRACTOR SHALL NOTIFY THE DEPARTMENT OF WATER 24 HOURS PRIOR TO SCHEDULED ELECTRICAL/WATER TRENCH BACKFILLING OPERATIONS.
4. CONTRACTOR SHALL PLACE 8-MIL ORANGE COLORED PLASTIC WARNING TAPE, NOT LESS THAN 4" WIDE PLACED 1 FOOT ABOVE ELECTRICAL CONDUITS.

3 C-512 WATER CROSSING AT ELECTRICAL DETAIL

NOT TO SCALE

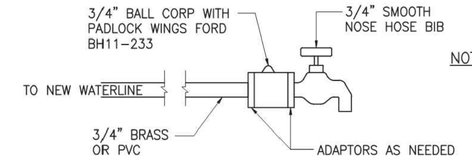

NOTES:

SHALL BE USED DURING DISINFECTION RELATED TO WATER NOTES AND PLACED APPROXIMATELY EVERY 1000 FEET OR AS DEEMED BY MANAGER

1 C-512 TEMPORARY SAMPLING POINT FOR DISINFECTION DETAIL

NOT TO SCALE

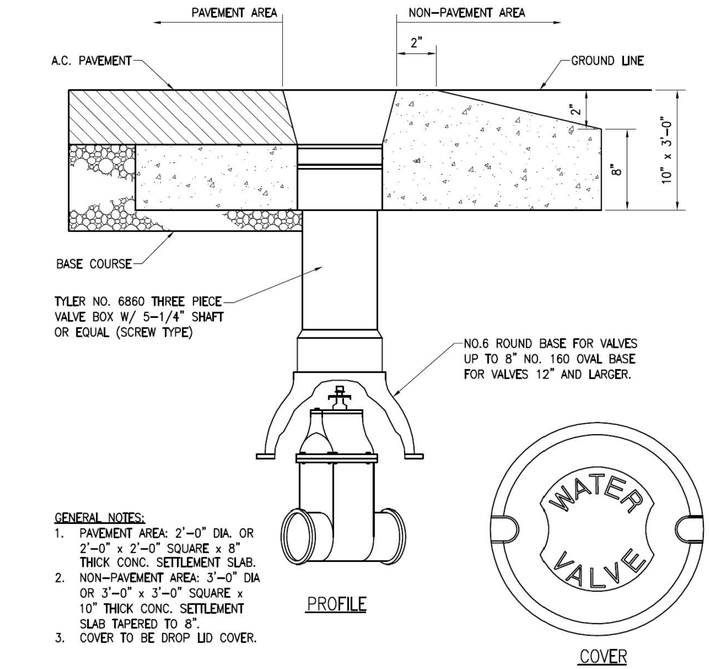

GENERAL NOTES:

1. PAVEMENT AREA: 2'-0" DIA. OR 2'-0" x 2'-0" SQUARE x 8" THICK CONC. SETTLEMENT SLAB.
2. NON-PAVEMENT AREA: 3'-0" DIA OR 3'-0" x 3'-0" SQUARE x 10" THICK CONC. SETTLEMENT SLAB TAPERED TO 8".
3. COVER TO BE DROP LID COVER.

2 C-512 CAST IRON VALVE BOX DETAIL

NOT TO SCALE

APPROVED:

FOR MANAGER AND CHIEF ENGINEER, DEPT. OF WATER COUNTY OF KAUA'I — DATE

RICHARD Y. SANTO
LICENSED PROFESSIONAL ENGINEER
NO. 8955-C
HAWAII USA

This work was prepared by me or under my supervision and is the property of SSFM International, Inc. and may not be used in whole or in part without the written permission of SSFM International, Inc. Unauthorized use of these plans and documents without the written permission of SSFM International, Inc. will be subject to legal action. Professional Engineer, Architect, Surveyor, and Landscape Architect

4/30/24
Expiration date of the license

NOTE: Contractor to check and verify dimensions at job before proceeding with work.

SSFM International, Inc.
501 Sumner Street
Suite 620
Honolulu, Hawaii 96817

REVISION	DATE	DESCRIPTION	MADE BY	APPROVED

PROJECT:
DEPARTMENT OF HAWAIIAN HOME LANDS
SITE AND INFRASTRUCTURE IMPROVEMENTS
FOR HANAPĒPĒ RESIDENTIAL LOTS, PHASE 2
TMK: (4) 1-8-007: 003 (PORTION) & (4) 2-8-007: 001 TO 050 (PORTION)
Hanapēpē, Waimea, Kaua'i, Hawai'i

WATER DETAILS - 4

THIS DOCUMENT CONTAINS INFORMATION PROPRIETARY TO SSFM INTERNATIONAL, INC., AND IS FURNISHED IN CONFIDENCE FOR THE LIMITED PURPOSE OF EVALUATION, BIDDING OR REVIEW. THIS DOCUMENT OR ITS CONTENTS MAY NOT BE USED FOR ANY OTHER PURPOSE AND MAY NOT BE REPRODUCED OR DISCLOSED TO OTHERS WITHOUT THE PRIOR WRITTEN CONSENT OF SSFM INTERNATIONAL, INC.

DATE
NOVEMBER 2022

SHEET NUMBER
C-512
75 OF 109 SHEETS

W:_CIVIL 3D PROJECTS\2018_021.001 DHHL HANAPEPE RESIDENTIAL SUBDIVISION PHASE 2\01 CE DWG\C-512 WATER DETAILS - 4.DWG 11/4/2022 5:22 PM EBORNALES

PRINTED: 11/7/22

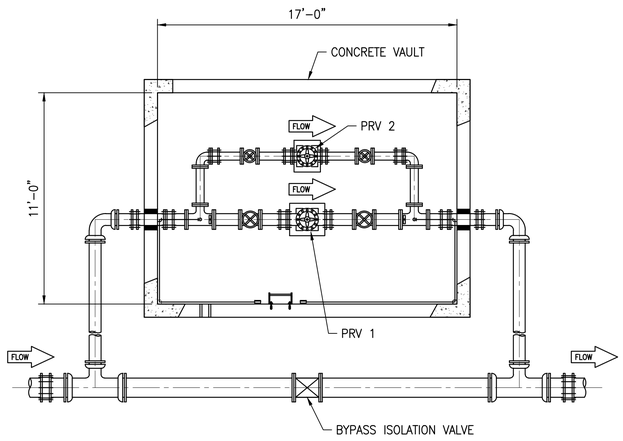

1 C-513 SCHEMATIC PRV LAYOUT
NOT TO SCALE

MATERIAL LIST

NO.	DESCRIPTION
1	8" x 6" DI TEE, MJxMJxMJ
2	8" GATE VALVE CLASS 150, MJxMJ
3	6" DI PIPE, 18"± LONG PExPE
4	6" 1/4 BEND, MJxMJ
5	6" FLEXIBLE SLEEVE, PExPE
6	WALL PENETRATION SEAL
7	6" DI FLANGE ADAPTER, FLxPE
8	6" x 6" DI TEE FLxFLxFL
9	6" SPOOL WITH WELDED FLANGE, 24"± LONG, FLxFL
10	6" GATE VALVE CLASS 150, FLxFL
11	6" SPOOL WITH WELDED FLANGE, 12"± LONG, FLxPE
12	6" PRESSURE REDUCING VALVE, INLET PRESSURE 95 PSI, OUTLET PRESSURE 88 PSI
13	CONCRETE PEDESTAL VALVE OR FITTING PIPE SUPPORT
14	6" SPOOL WITH WELDED FLANGE, 34"± LONG, FLxFL
15	6" 1/4 BEND, FLxFL
16	6" DI FLANGE ADAPTER, FLxPE
17	6" SPOOL WITH WELDED FLANGE, 12"± LONG, PExFL
18	6" GATE VALVE CLASS 150, FLxFL
19	6" PRESSURE REDUCING VALVE, OUTLET PRESSURE 95 PSI, OUTLET PRESSURE 88 PSI
20	PIPE STANCHION SADDLE SUPPORT WITH YOKE
21	PRESSURE GAUGE ASSEMBLY
22	LIQUID–FILLED PRESSURE GAUGE
23	ALUMINUM LADDER
24	LADDER SAFETY EXTENSION
25	GRATING & STAINLESS STEEL FRAME
26	STEEL PIPE DRAIN SYSTEM
27	ALUMINUM SINGLE–LEAF DOOR
28	REINFORCED CONCRETE VAULT
29	CI VALVE BOX
30	GOOSENECK VENT.

ALL VAULTS AND ACCESS DOORS SHALL BE DESIGN TO WITHSTAND (H20) LOADING.

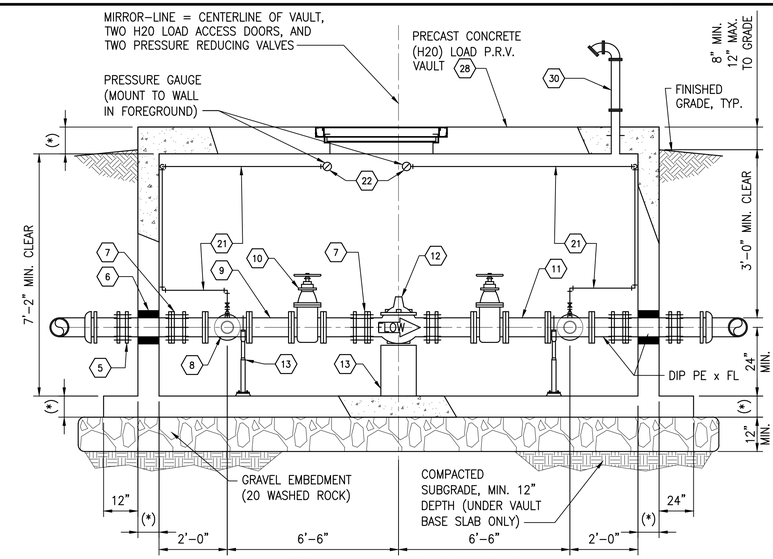

5 C-513 VAULT SECTION A–A
NOT TO SCALE

NOTE:

DIMENSIONS AND ELEVATIONS SHOWN WITH AN ASTERISK (*) SHALL BE DETERMINED AND/OR VERIFIED AFTER FINAL EQUIPMENT SELECTION AND LOCATION HAVE BEEN MADE.

VAULT DIMENSIONS NOTE:

VAULT DIMENSIONS SHOWN ARE MINIMUM, AND MUST BE VERIFIED FOR EQUIPMENT AND PIPING MATERIALS ACTUALLY FURNISHED FOR THE PRESSURE REDUCING VALVE VAULT TO BE CONSTRUCTED.

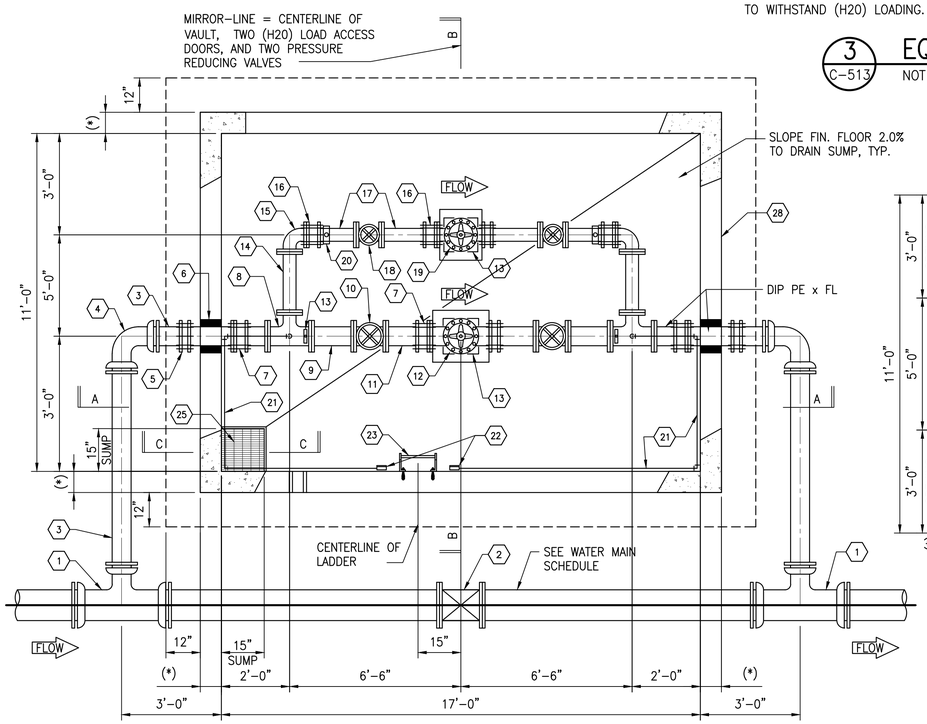

2 C-513 SECTION PLAN VIEW
NOT TO SCALE

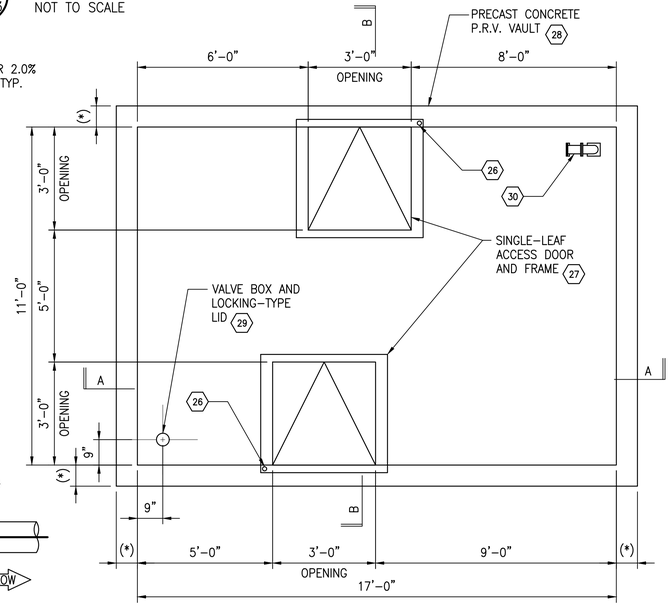

4 C-513 COVER SLAB PLAN VIEW
NOT TO SCALE

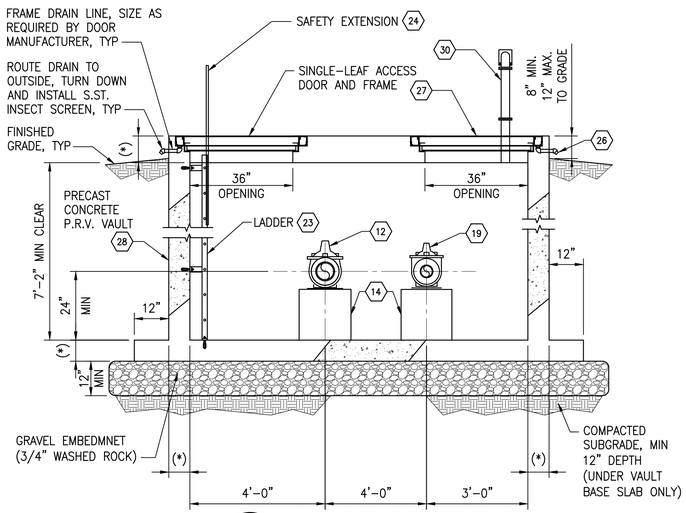

6 C-513 VAULT SECTION B–B
NOT TO SCALE

NOTE:

VAULT DIMENSIONS SHOWN ARE MINIMUM, AND MUST BE VERIFIED FOR EQUIPMENT AND PIPING MATERIALS ACTUALLY FURNISHED FOR THE PRESSURE REDUCING VALVE VAULT TO BE CONSTRUCTED.

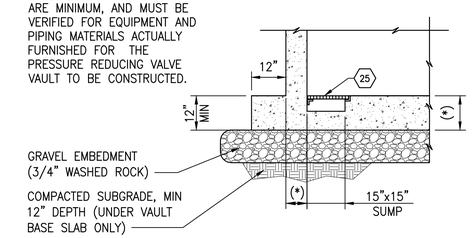

7 C-513 VAULT SECTION C–C
NOT TO SCALE

NOTE:

SEE DETAIL 3 ON THIS SHEET FOR EQUIPMENT NOTES

DIMENSIONS AND ELEVATIONS SHOWN WITH AN ASTERISK (*) SHALL BE DETERMINED AND/OR VERIFIED AFTER FINAL EQUIPMENT SELECTION AND LOCATION HAVE BEEN MADE.

VAULT DIMENSIONS NOTE:

VAULT DIMENSIONS SHOWN ARE MINIMUM, AND MUST BE VERIFIED FOR EQUIPMENT AND PIPING MATERIALS ACTUALLY FURNISHED FOR THE PRESSURE REDUCING VALVE VAULT TO BE CONSTRUCTED.

APPROVED:

FOR MANAGER AND CHIEF ENGINEER, DEPT. OF WATER COUNTY OF KAUA'I — DATE

RICHARD Y. SANTO LICENSED PROFESSIONAL ENGINEER NO. 8955-C HAWAII USA

This work was prepared by me or under my supervision and is the property of SSFM International, Inc. and may not be used, in whole or in part, for any other project without the written authorization of SSFM International, Inc. Professional Engineer, Architect, Surveyor, and Landscape Architect

4/30/24
Date of Signature

NOTE: Contractor to check and verify dimensions at job before proceeding with work.

SSFM International, Inc.
501 Sumner Street
Suite 620
Honolulu, Hawaii 96817

REVISION	DATE	DESCRIPTION	MADE BY	APPROVED

PROJECT:
DEPARTMENT OF HAWAIIAN HOME LANDS
SITE AND INFRASTRUCTURE IMPROVEMENTS
FOR HANAPĒPĒ RESIDENTIAL LOTS, PHASE 2
TMK: (4) 1-8-007: 003 (PORTION) & (4) 2-8-007: 001 TO 050 (PORTION)
Hanapēpē, Waimea, Kaua'i, Hawai'i

WATER DETAILS - 5

THIS DOCUMENT CONTAINS INFORMATION PROPRIETARY TO SSFM INTERNATIONAL, INC., AND IS FURNISHED IN CONFIDENCE FOR THE LIMITED PURPOSE OF EVALUATION, BIDDING OR REVIEW. THIS DOCUMENT OR ITS CONTENTS MAY NOT BE USED FOR ANOTHER PURPOSE, MAY NOT BE REPRODUCED OR DISCLOSED TO OTHERS WITHOUT THE PRIOR WRITTEN CONSENT OF SSFM INTERNATIONAL, INC.

DATE
NOVEMBER 2022

SHEET NUMBER
C-513
76 OF 109 SHEETS

W:_CIVIL 3D PROJECTS\2018_021.001 DHHL HANAPĒPĒ RESIDENTIAL SUBDIVISION PHASE 2\01 CE DWG\C-513 WATER DETAILS - 5.DWG 11/11/2022 2:01 PM EBORNALES

SPECIFIC NOTES:

1. CONCRETE PEDESTAL VALVE SUPPORT; HORIZONTAL CONCRETE DIMENSIONS AND ANCHOR BOLT SIZE, LENGTH AND LOCATIONS TO BE DETERMINED BY THE VALVE MANUFACTURER TO FIT THE VALVE MOUNTING BASE SUPPLIED WITH THE VALVE. VERIFY ALL DIMENSIONS WITH THE VALVE MANUFACTURER. CONCRETE REINFORCING SHALL BE NO. 5 VERTICAL REBARS AND NO. 4 HORIZONTAL HOOPS PLACED AT 8–INCH ON–CENTERS (ALL VERTICAL BARS TO BE EMBEDDED INTO SLAB TO A DEPTH AS RECOMMENDED BY EPOXY SYSTEM MANUFACTURER).
2. PIPE STANCHION SADDLE SUPPORT WITH EXPANSION ANCHORS AS RECOMMENDED BY SUPPORT MANUFACTURER.
3. SUPPORT COPPER TUBING WITH PIPE STRAP AND 3/8" EXPANSION ANCHORS, INSTALLED AT MAX. 39" O.C. EQUAL SPACING.
4. GLOBE–STYLE, FULL PORT WITH STEM INDICATOR AND 4–1/2", OIL FILLED, GAUGES ON THE INLET AND OUTLET PORTS.
5. LADDER, ALL ALUMINUM CONSTRUCTION, WITH 7" STAND–OFF (FOR FLAT WALL) AND FLOOR MOUNTING BRACKETS AND SAFETY EXTENSION.
6. REMOVABLE FRP GRATING WITH FRP FRAME AND SST ANCHORS.
7. ALUMINUM SINGLE–LEAF ACCESS DOOR, RATED FOR AASHTO H–20 WHEEL LOAD.

PRESSURE REDUCING VALVE NOTES:

A. THE CONTRACTOR SHALL PROVIDE SUBMITTALS FOR APPROVAL BY THE OWNER FOR ALL VAULT, PIPING, EQUIPMENT AND MATERIALS PRIOR TO ANY CONSTRUCTION.
B. FIELD VERIFY THE DEPTH OF THE ADJACENT PIPING TO BE CONNECTED TO AND ADJUST THE VERTICAL DIMENSIONS OF THE VAULT AS REQUIRED.
C. FIELD VERIFY THE MATERIAL AND PRESSURE CLASS OF THE ADJACENT PIPING TO BE CONNECTED TO AND PROVIDE APPROPRIATE PIPE CONNECTION FITTINGS AS REQUIRED.
D. PRIOR TO BEGINNING CONSTRUCTION, THE CONTRACTOR SHALL FIELD VERIFY LOCATIONS AND ELEVATIONS OF ANY EXISTING UTILITIES, STRUCTURES AND EQUIPMENT WHICH PERTAIN TO AND/OR AFFECT THE CONSTRUCTION OF THE VAULT.
E. THE LOCATION AND ORIENTATION OF THE VAULT SHALL BE APPROVED BY THE OWNER PRIOR TO CONSTRUCTION.
F. DIMENSIONS AND ELEVATIONS SHOWN WITH AN ASTERISK (*) SHALL BE DETERMINED AND/OR VERIFIED AFTER FINAL EQUIPMENT SELECTION AND LOCATION HAVE BEEN MADE.
G. VERIFY ALL PIPING DIMENSIONS AND ELEVATIONS FOR EQUIPMENT AND PIPING MATERIALS ACTUALLY FURNISHED FOR THIS PROJECT.
H. UNLESS OTHERWISE NOTED ALL SITE AND VAULT PIPING SHALL BE DUCTILE IRON PIPE (DI) WITH BITUMINOUS COATING AND CEMENT LINING.
I. THE CONTRACTOR SHALL PROVIDE COUPLINGS, EXPANSION JOINTS, AND THRUST RESTRAINTS AS REQUIRED FOR ALL PIPING.
J. ALL VALVES, FITTINGS, AND PIPE NOT DESIGNATED OTHERWISE SHALL BE EPOXY COATED AND SHALL BE NATIONAL SANITATION FOUNDATION (NSF) STANDARD 61 CERTIFIED.

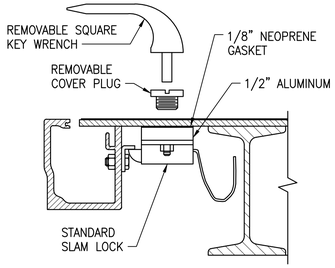

SECTION A–A

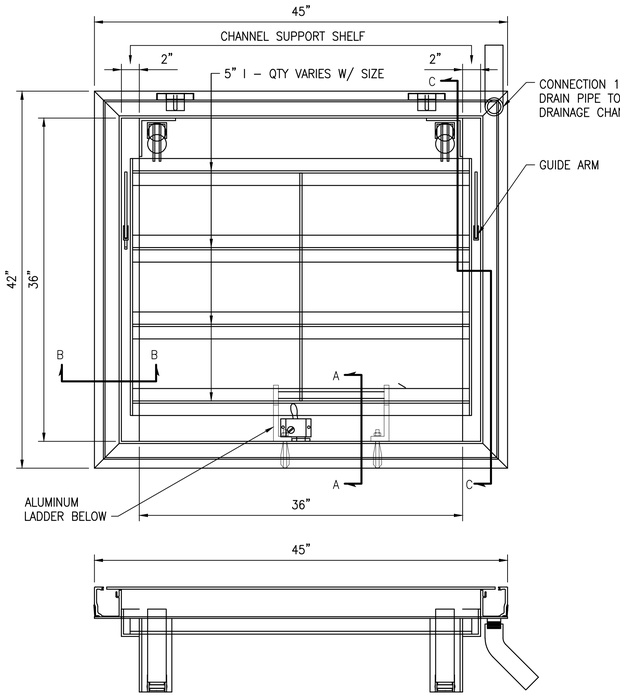

PLAN AND ELEVATION

NOTE:
DESIGNED TO WITHSTAND H–20 WHEEL LOADINGS SUITABLE FOR USE IN OFF–STREET LOCATIONS WHERE NOT SUBJECTED TO HIGH DENSITY TRAFFIC

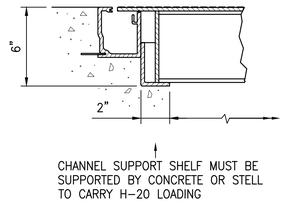

SECTION B–B

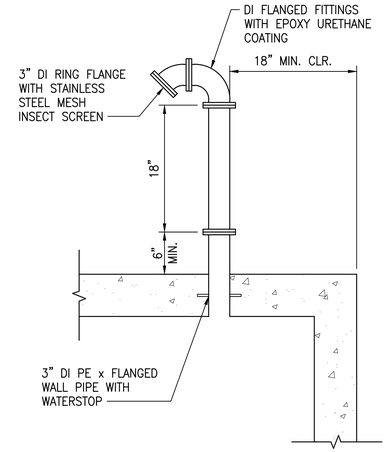

1 C–514 GOOSENECK VENT. DETAIL
NOT TO SCALE

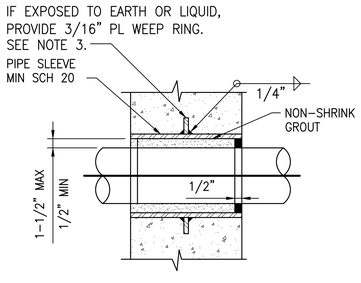

PIPE PENETRATION NOTES:

1. ALL PIPE SLEEVES SHALL BE TYPE 316 STAINLESS STEEL.
2. PROVIDE A MINIMUM OF 3" CLEARANCE BETWEEN REINFORCING STEEL AND FERROUS METAL PENETRATIONS.
3. WEEP RINGS SHALL HAVE A MINIMUM DIAMETER 3" GREATER THAN THE OUTSIDE PIPE DIAMETER.
4. PROVIDE SEALANT AND BACKER ROD OR TAPE ON TANK, BOTH SIDES IF REQUIRED.

3 C–514 WALL PENETRATION DETAIL
NOT TO SCALE

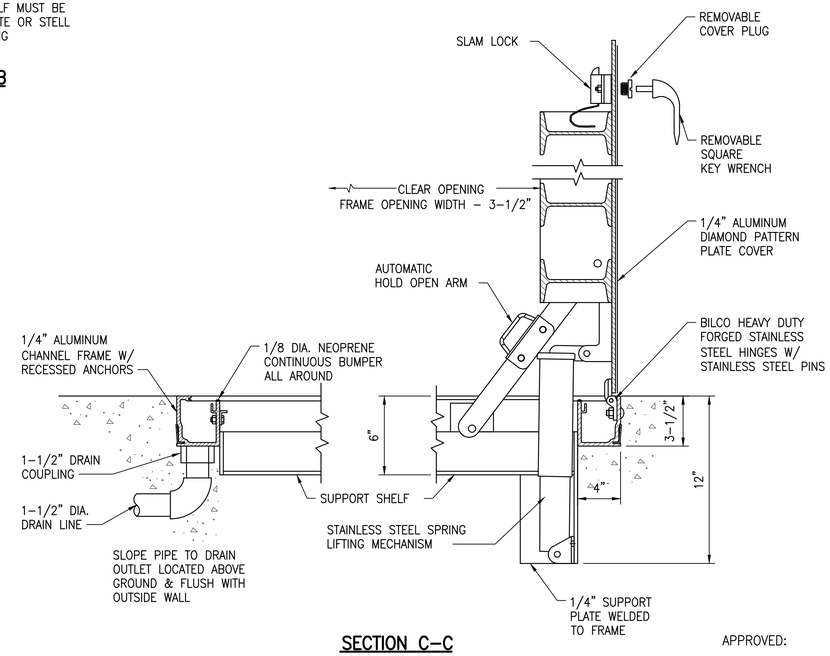

SECTION C–C

2 C–514 SINGLE LEAF ACCESS DOOR DETAIL
NOT TO SCALE

APPROVED:

FOR MANAGER AND CHIEF ENGINEER, DEPT. OF WATER COUNTY OF KAUA'I — DATE

RICHARD Y. SANTO LICENSED PROFESSIONAL ENGINEER NO. 8955–C HAWAII USA

This work was prepared by me or under my supervision and is not to be used in whole or in part for any construction. Drawings, Specifications, Plans, Reports, or Documents prepared by Professional Engineers, Architects, Surveyors, and Landscape Architects) — 4/30/24 — Expiration date of the license — Signature

NOTE: Contractor to check and verify dimensions at job before proceeding with work.

SSFM International, Inc.
501 Sumner Street
Suite 620
Honolulu, Hawaii 96817

REVISION	DATE	DESCRIPTION	MADE BY	APPROVED

PROJECT:
DEPARTMENT OF HAWAIIAN HOME LANDS
SITE AND INFRASTRUCTURE IMPROVEMENTS
FOR HANAPĒPĒ RESIDENTIAL LOTS, PHASE 2
TMK: (4) 1-8-007: 003 (PORTION) & (4) 2-8-007: 001 TO 050 (PORTION)
Hanapēpē, Waimea, Kaua'i, Hawai'i

WATER DETAILS - 6

THIS DOCUMENT CONTAINS INFORMATION PROPRIETARY TO SSFM INTERNATIONAL, INC., AND IS FURNISHED IN CONFIDENCE FOR THE LIMITED PURPOSE OF EVALUATION, BIDDING OR REVIEW. THIS DOCUMENT OR ITS CONTENTS MAY NOT BE USED FOR ANY OTHER PURPOSE AND MAY NOT BE REPRODUCED OR ADAPTED IN WHOLE OR IN PART WITHOUT THE PRIOR WRITTEN CONSENT OF SSFM INTERNATIONAL, INC.

DATE
NOVEMBER 2022

SHEET NUMBER
C-514
77 OF 109 SHEETS

W:_CIVIL 3D PROJECTS\2018_021.001 DHHL HANAPĒPĒ RESIDENTIAL SUBDIVISION PHASE 2\01 CE DWG\C-514 WATER DETAILS - 6.DWG 11/11/2022 2:26 PM EBORNALES

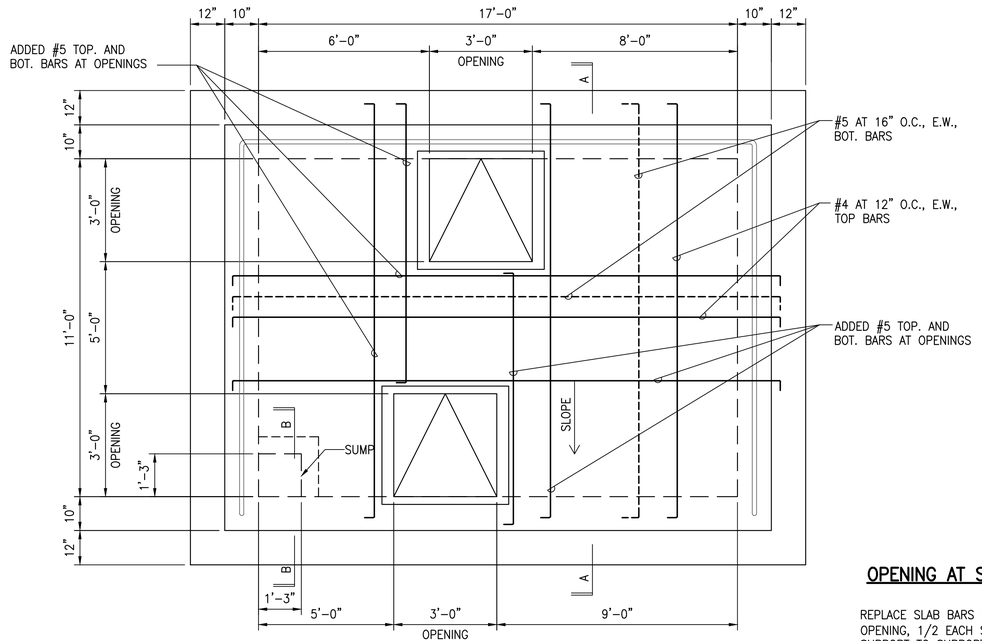

1 C-515 **VAULT DETAILED PLAN**
NOT TO SCALE

OPENING AT SLAB AND WALL NOTES

REPLACE SLAB BARS INTERRUPTED BY OPENING, 1/2 EACH SIDE, EXTENDING FROM SUPPORT TO SUPPORT, EXCEPT NOT LESS THAN 1– #5 TOP AND BOT. (EXTEND 2'–6" MIN. BEYOND EDGE OF OPENING.)

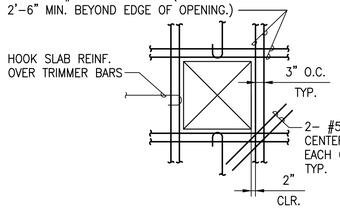

MAINTAIN MINIMUM BAR LENGTH SHOWN, BEND BARS WHERE NECESSARY AT ADJACENT OPENINGS, WALL CORNERS AND ENDS

CONDITION AT SLAB OPENING

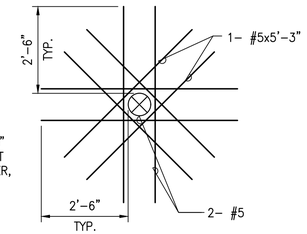

MAINTAIN MINIMUM BAR LENGTH SHOWN, BEND BARS WHERE NECESSARY AT ADJACENT OPENINGS, WALL CORNERS AND ENDS

CONDITION AT WALL OPENING

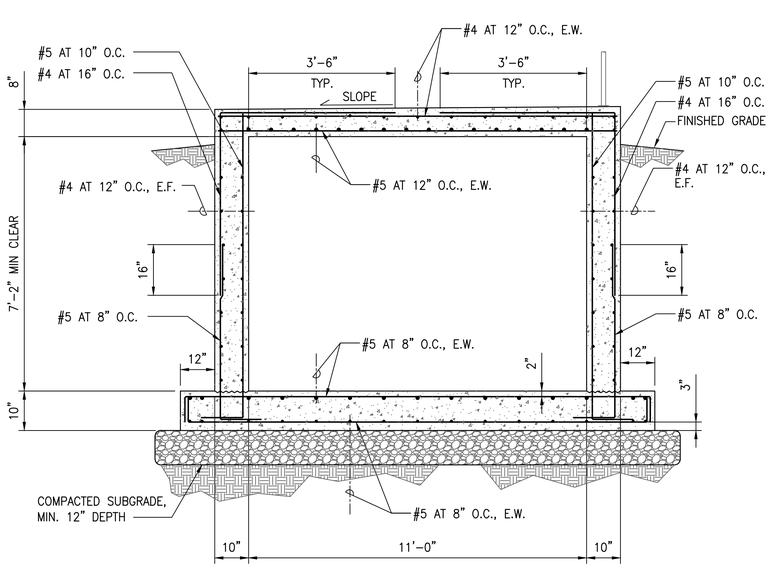

2 C-515 **VAULT DETAILED SECTION A–A**
NOT TO SCALE

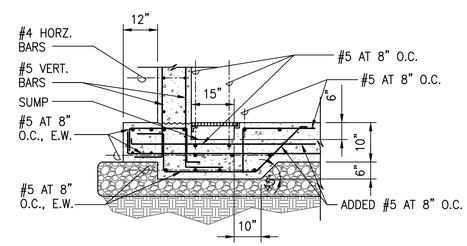

3 C-515 **SUMP DETAILED SECTION B–B**
NOT TO SCALE

APPROVED:

FOR MANAGER AND CHIEF ENGINEER, DEPT. OF WATER COUNTY OF KAUA'I — DATE

RICHARD Y. SANTO
LICENSED PROFESSIONAL ENGINEER
NO. 8955-C
HAWAII USA

This work was prepared by me or under my supervision and I certify that to the best of my knowledge, the design, plans, specifications, and construction observation comply with applicable portions of Chapter 464, Hawaii Revised Statutes, Professional Engineers, Architects, Surveyors, and Landscape Architects.

4/30/24
Date of Signature

NOTE: Contractor to check and verify dimensions at job before proceeding with work.

SSFM International
SSFM International, Inc.
501 Sumner Street
Suite 620
Honolulu, Hawaii 96817

REVISION	DATE	DESCRIPTION	MADE BY	APPROVED

PROJECT:
DEPARTMENT OF HAWAIIAN HOME LANDS
SITE AND INFRASTRUCTURE IMPROVEMENTS
FOR HANAPĒPĒ RESIDENTIAL LOTS, PHASE 2
TMK: (4) 1-8-007: 003 (PORTION) & (4) 2-8-007: 001 TO 050 (PORTION)
Hanapēpē, Waimea, Kaua'i, Hawai'i

WATER DETAILS - 7

THIS DOCUMENT CONTAINS INFORMATION PROPRIETARY TO SSFM INTERNATIONAL, INC. AND IS FURNISHED IN CONFIDENCE FOR THE LIMITED PURPOSE OF EVALUATION, BIDDING OR REVIEW. THIS DOCUMENT OR ITS CONTENTS MAY NOT BE USED FOR ANY OTHER PURPOSE AND MAY NOT BE REPRODUCED OR DISCLOSED TO OTHERS WITHOUT THE PRIOR WRITTEN CONSENT OF SSFM INTERNATIONAL, INC.

DATE
NOVEMBER 2022

SHEET NUMBER
C-515
78 OF 109 SHEETS

W:_CIVIL 3D PROJECTS\2018_021.001 DHHL HANAPEPE RESIDENTIAL SUBDIVISION PHASE 2\01 CE DWG\C-515 WATER DETAILS - 7.DWG 11/14/2022 9:24 AM EBORNALES

ELECTRICAL SYMBOLS

SYMBOL	DESCRIPTION
⟜○	LUMINAIRE POST STANDARD FOR 100W HPS STREET LIGHT,
	SEE DETAIL A/E-404
⊠	KIUC 2' X 4' HANDHOLE
⊠	KIUC 3' X 5' HANDHOLE
⊠	KIUC 4' X 6' HANDHOLE
▨	HTCO/SIC 30" X 48" X 33" HANDHOLE
▨	HTCO 3' X 5' HANDHOLE
▭	CATV 2' X 4' HANDHOLE
▭	CATV 2' X 6' HANDHOLE
▭	CATV 3' X 5' HANDHOLE
⟨1A⟩	HANDHOLE GROUP WITH SERVICE STUB-OUT &
	DESIGNATOR; INDICATES TYPE "1A" HANDHOLE,
	SEE SCHEDULE ON SHEET E-101
⟨2C⟩	HANDHOLE OR HANDHOLE GROUP & DESIGNATOR;
	INDICATES TYPE "2C" HANDHOLE, SEE SCHEDULE ON
	SHEET E-101
▨	KIUC SWITCHING EQUIPMENT PAD LOT, 10'-6" X 14'-0"
	EASEMENT & CONCRETE PAD
S	CONCRETE STUB-UP MARKER, SEE DETAIL 3/E-300
V	CATV POWER SUPPLY PEDESTAL, 6' X 6' EASEMENT, SEE SHEET E-403
T	6' X 7' KIUC TRANSFORMER PAD LOT, SEE 4/E-400
	DASHED LINE INDICATES LIMITS OF 6'-0" X 7'-0" KIUC EASEMENT
—P—	SECONDARY ELECTRIC CONDUIT
- - -st- - -	EXISTING STREET LIGHT CONDUIT & WIRING
—SL—	STREET LIGHT DUCTS & CABLES
—+—	INDICATES CHANGE IN DUCT SECTION
—·—a	CONDUIT STUB, CAP & MARK CONDUIT WITH CONCRETE MARKER
—·—g—	ELEC/SIGNAL DUCTLINE & DESIGNATORS; INDICATES
B 3E	TYPE "B" DUCT SECTION WITH TYPE "3E" DUCT;
	SEE SCHEDULE ON SHEET E-300 AND E-301

ABBREVIATIONS:

A	AMPERES
AC	ASPHALT CONCRETE
AFF	ABOVE FINISH FLOOR
AFG	ABOVE FINISH GRADE
AHJ	AUTHORITY HAVING JURISDICTION
AIC	AMPERE INTERRUPTING CURRENT
C	CONDUIT
COMM	COMMUNICATION
D	DEPTH
DIA	DIAMETER
DN	DOWN
DWG	DRAWING
EA	EACH
ELEC	ELECTRICAL
EQUIP	EQUIPMENT
EXIST	EXISTING
EXT	EXTERIOR
GND	GROUND
GRS	GALVANIZED RIGID STEEL
H	HEIGHT
HT/HTCO	HAWAIIAN TELCOM
JB	JUNCTION BOX
KIUC	KAUAI ISLAND UTILITY COOPERATIVE
KVA	KILO-VOLT AMPERES
LT	LIGHT
MAX	MAXIMUM
MIN	MINIMUM
MTD	MOUNTED
NEC	NATIONAL ELECTRICAL CODE
NEMA	NATIONAL ELECTRICAL MANUFACTURERS ASSOCIATION
NO	NUMBER
NIC	NOT IN CONTRACT
PWR	POWER
SQ	SQUARE
ST	STREET
TEL	TELEPHONE
TELCOM	TELECOMMUNICATION
UON	UNLESS OTHERWISE NOTED
V	CABLE TELEVISION OR VOLT(S)
W	WIRE OR WIDTH

GENERAL NOTES:

1. PLANS DO NOT INDICATE COMPLETE EXISTING ELECTRICAL CONDITIONS. PRIOR TO THE START OF WORK, VISIT JOBSITE TO BECOME FAMILIAR WITH ALL EXISTING CONDITIONS AND EXTENT OF DEMOLITION AND NEW WORK.

2. RESOLVE ALL DISCREPANCIES AND QUESTIONS PRIOR TO THE START OF WORK. NO EXTRA PAYMENT SHALL BE ALLOWED ON ACCOUNT OF WORK MADE NECESSARY BY FAILURE TO VISIT THE JOB SITE AND/OR FAILURE TO RESOLVE DISCREPANCIES AND QUESTIONS.

3. PRIOR TO MATERIAL ORDERING AND ANY ROUGH-IN WORK, CONTRACTOR SHALL COORDINATE WITH THE UTILITY COMPANIES, OTHER TRADES, AND SUPPLIERS.

4. EXPOSED CONDUITS SHALL BE PVC COATED GALVANIZED RIGID STEEL.

5. SMALL JUNCTION BOXES IN INTERIOR LOCATIONS SHALL BE NEMA 1. FOR EXTERIOR LOCATIONS, JUNCTION BOXES SHALL BE NEMA 4X, 316 STAINLESS STEEL.

   LARGE JUNCTION BOXES IN INTERIOR LOCATIONS SHALL BE NEMA 1, FABRICATED FROM NEC GRADE STEEL, HOT-DIP GALVANIZED. FOR EXTERIOR LOCATIONS, JUNCTION BOXES SHALL BE NEMA 4X, 316 STAINLESS STEEL.

6. ALL ITEMS SPECIFIED AS NEMA 4X SHALL BE STAINLESS STEEL 316 (SS316) UNLESS OTHERWISE INDICATED. ALL C-CHANNELS AND FASTENING HARDWARE: SCREWS, NUTS, BOLTS, WASHERS, ETC. SHALL BE SS316. ALL EXPOSED FACTORY PROVIDED HARDWARE NOT SS316 SHALL BE REPLACED WITH SS316 HARDWARE.

7. PROVIDE PULLSTRING IN ALL NEW CONDUITS. LABEL PULLSTRING WITH ASSOCIATED DESTINATION, FOR ALL CONDUITS.

8. ALL ITEMS SHOWN ON DRAWINGS SHALL BE NEW UNLESS OTHERWISE INDICATED.

9. MAINTAIN ELECTRICAL CONNECTIONS (POWER, SIGNAL AND LIGHTING) TO UNAFFECTED AREAS.

10. PROVIDE AS-BUILT DRAWINGS.

APPROVED BY:

KAUA'I ISLAND UTILITY COOPERATIVE — DATE

HAWAIIAN TELCOM — DATE

SPECTRUM — DATE

JENSON J. SANTOS
LICENSED PROFESSIONAL ENGINEER
No. 14286-E
HAWAII, U.S.A.

This work was prepared by me or under my supervision and I am a duly licensed professional engineer under the laws of the State of Hawaii. Professional Engineers, Architects, Surveyors, and Landscape Architects.

4/30/24

NOTE: Contractor to check and verify dimension at job before proceeding with work of this license

REVISION	DATE	DESCRIPTION	MADE BY	APPROVED

PROJECT:
DEPARTMENT OF HAWAIIAN HOME LANDS
SITE AND INFRASTRUCTURE IMPROVEMENTS
FOR HANAPĒPĒ RESIDENTIAL LOTS, PHASE 2
TMK: (4) 1-8-007: 003 (PORTION) & (4) 2-8-007: 001 TO 050 (PORTION)
Hanapēpē, Waimea, Kaua'i, Hawai'i

LOCATION MAP, SYMBOL LIST, AND ABBREVIATIONS

THIS DOCUMENT CONTAINS INFORMATION PROPRIETARY TO SSFM INTERNATIONAL, INC. AND IS FURNISHED IN CONFIDENCE FOR THE LIMITED PURPOSE OF EVALUATION, BIDDING OR REVIEW. THIS DOCUMENT OR ITS CONTENTS MAY NOT BE USED FOR ANY OTHER PURPOSE AND MAY NOT BE REPRODUCED OR DISCLOSED TO OTHERS WITHOUT THE PRIOR WRITTEN CONSENT OF SSFM INTERNATIONAL, INC.

DATE
NOVEMBER 2022

SHEET NUMBER
E-100

79 OF 109 SHEETS

2022-11-07 8:31 AM Z:\Acad\PROJECTS\218171\E\100_74_218171B_Symbols

EQUIPMENT SCHEDULE

THE KAUA'I ISLAND UTILITY COOPERATIVE (KIUC), HAWAIIAN TELCOM (HTCO), OCEANIC TIME WARNER CABLE (CATV) & TRAFFIC SIGNAL PULLBOXES, HANDHOLES, MANHOLES, & SWITCHING EQUIPMENT PADS TO BE PROVIDED BY THE CONTRACTOR AS SHOWN IN THESE DRAWINGS & IN ACCORDANCE WITH THE FOLLOWING STANDARD DRAWINGS:

TYPE	DESCRIPTION
2' X 4' KIUC PULLBOX	2'–0" X 4'–0" PRECAST CONCRETE PULLBOX WITH PRECAST CONCRETE COVER, PROVIDED IN ACCORDANCE WITH KIUC STANDARD DRAWING NO. PB–2X4.
3' X 5' KIUC HANDHOLE	3'–6" X 5'–6" REINFORCED CONCRETE HANDHOLE WITH PRECAST CONCRETE COVERS, PROVIDED IN ACCORDANCE WITH KIUC STANDARD DRAWING NO. PB–3X5.
5' X 7' KIUC HANDHOLE	5'–0" X 7'–0" REINFORCED CONCRETE HANDHOLE WITH PRECAST CONCRETE COVERS, PROVIDED IN ACCORDANCE WITH KIUC STANDARD DRAWING NO. PB–5X7.
4' X 6' KIUC HANDHOLE	4'–0" X 6'–0" REINFORCED CONCRETE HANDHOLE WITH PRECAST CONCRETE COVERS, PROVIDED IN ACCORDANCE WITH KIUC STANDARD DRAWING NO. PB–4X6.
6' X 11' KIUC HANDHOLE	6'–0" X 11'–0" REINFORCED CONCRETE MANHOLE WITH PRECAST CONCRETE COVERS, PROVIDED IN ACCORDANCE WITH KIUC STANDARD DRAWING NO. PB–6X11.
12" X 20" HTCO PULLBOX	12" X 20" TYPE 436T PRECAST CONCRETE METER PULLBOX WITH CAST IRON COVER PER HTCO STANDARD DRAWING NO. 34024.
2' X 4' HTCO PULLBOX	2'–0" X 4'–0" TYPE 435TB PRECAST CONCRETE PULLBOX WITH 2–PIECE STEEL "SLIP–NOT" GRIP OR POLYMER "NON–SKID" COVERS AND GROUND ROD, PER HTCO STANDARD DRAWING NO. 34056. A MINIMUM OF 2 PRECAST CONCRETE PULLBOX SECTIONS SHALL BE REQUIRED AT EACH PULLBOX.
3' X 5' HTCO HANDHOLE	3'–0" X 5'–0" X 4'–0"D REINFORCED PLASTIC HANDHOLE WITH TWO PIECE "NON–SLIP" POLYMER "PARKWAY" COVERS, SIDE ENTRY KNOCKOUTS, & GROUND ROD, PROVIDED IN ACCORDANCE WITH HTCO STANDARD DRAWING NO. 34111.
4' X 6' HTCO HANDHOLE	4'–0" X 6'–0" TYPE 1 REINFORCED CONCRETE HANDHOLE WITH STEEL "SLIP–NOT" GRIP OR POLYMER "NON–SKID" COVERS, CABLE RACKS AND GROUND ROD, PROVIDED IN ACCORDANCE WITH HTCO STANDARD DRAWING NO. 34029.
4' X 6' X 5' HTCO SPECIAL TYPE I HANDHOLE	4'–0" X 6'–0" X 5'–0" SPECIAL TYPE I REINFORCED CONCRETE HANDHOLE WITH STEEL "SLIP–NOT" GRIP OR POLYMER "NON–SKID" COVERS, CABLE RACKS AND GROUND ROD, PROVIDED IN ACCORDANCE WITH HTCO STANDARD DRAWING SPL. 4'–0" X 6'–0" X 5'–0" HTCO TYPE I.
5' X 10'–6" HTCO MANHOLE	5'–0" X 10'–6" REINFORCED CONCRETE MANHOLE WITH TRAFFIC RATED CAST IRON FRAME & COVER, PROVIDED IN ACCORDANCE WITH HTCO STANDARD DRAWING NO. 180016.
6' X 12' HTCO MANHOLE	6'–0" X 12'–0" REINFORCED CONCRETE MANHOLE WITH TRAFFIC RATED CAST IRON FRAME & COVER, PROVIDED IN ACCORDANCE WITH HTCO STANDARD DRAWING NO. 180018.
12" X 20" CATV PULLBOX	12" X 20" PRECAST CONCRETE PULLBOX WITH PRECAST CONCRETE COVER, SIMILAR TO HC&D TYPE "B" METER BOX WITH "CATV" INSCRIBED ON COVER.
2' X 4' CATV PULLBOX	2'–0" X 4'–0" PRECAST CONCRETE PULLBOX WITH TWO PIECE NON SLIP CHECKERED STEEL PLATE COVERS, WITH "CATV" INSCRIBED ON COVER.
2' X 6' CATV	2'–0" X 6'–0" PRECAST CONCRETE PULLBOX WITH THREE PIECE POLYMER CONCRETE "SLIP–NOT" COVERS, SIMILAR TO HTCO 2' X 6' PULLBOX, HTCO DRAWING NO. 34078, EXCEPT WITH "CATV" INSCRIBED ON COVER.
3' X 5' CATV	3'–0" X 5'–0" REINFORCED CONCRETE HANDHOLE WITH TWO PIECE SLIP RESISTANT POLYMER RATED COVERS AND LOCKDOWN ASSIST, GROUND ROD, WITH "CATV" INSCRIBED ON COVER.
SINGLE–PHASE KIUC TRANSFORMER	6'–0" X 7'–0" TRANSFORMER PAD LOT WITH REINFORCED CONCRETE TRANSFORMER PAD & GROUND ROD PER KIUC STANDARD DRAWING NO. PAD–1PH.
10'–6" X 14' KIUC MANUAL SWITCHING EQUIPMENT PAD LOT	10'–6" X 14'–0" MANUAL TRANSFER SWITCHING EQUIPMENT ENCLOSURE PAD LOT WITH REINFORCED CONCRETE PAD AND GROUND ROD, PER KIUC STANDARD DRAWING NO. PAD–SWG.

GENERAL UTILITY NOTES

1. ALL WORK ON UTILITY FACILITIES SHALL BE DONE IN STRICT ACCORDANCE WITH THE SPECIFICATIONS AND REQUIREMENTS OF HTCO AND KIUC FOR THE FACILITIES WITHIN THEIR JURISDICTION.
2. THE CONTRACTOR SHALL CLOSELY COORDINATE ALL WORK WITH HTCO AND KIUC.
3. ALL TRENCHES MUST BE INSPECTED BY HTCO AND KIUC PRIOR TO BACKFILLING AND CONCRETE ENCASING OPERATIONS. THE CONTRACTOR SHALL NOTIFY THE HTCO INSPECTOR: DUKE SARDINHA AT O:808–246–3221; C:808–371–2962 AT LEAST 24 HOURS PRIOR TO THE POURING OF CONCRETE OR BACKFILLING.
4. CONDUITS CROSSING ROADWAYS SHALL BE ENCASED IN A CONCRETE JACKET; CONCRETE ENCASEMENT SHALL EXTEND A MINIMUM OF 12" BEYOND THE EDGE OF PAVEMENT.
5. MINIMUM CLEARANCES BETWEEN ELECTRICAL AND TELEPHONE CONDUITS SHALL BE 12" HORIZONTALLY AND 6" VERTICALLY; HOWEVER, IF THE CONDUITS ARE CONCRETE ENCASED, A 3" CLEARANCE MAY BE UTILIZED IN BOTH DIRECTIONS.
6. AT NO TIME SHALL CEMENT MORTAR, WOOD OR ANY OTHER MATERIAL BE USED BETWEEN PRECAST SECTIONS OF PULLBOXES, HANDHOLES AND MANHOLES. LEVELING OR RAISING OF BOXES SHALL BE DONE AT THE BRICK WORK SECTION USING CEMENT MORTAR. THE PERMANENT INSTALLATION OF WOODEN WEDGES TO LEVEL OR RAISE THE PRECAST SECTIONS SHALL NOT BE PERMITTED.
7. IF A 12" PRECASTED BASE IS NOT PROVIDED, THEN A MINIMUM OF TWO LAYERS OF BRICK SHALL BE USED ON ALL OF THE PULLBOX INSTALLATIONS. THERE SHALL BE NO LESS THAN ONE FULL LAYER OF BRICK BELOW THE LOWEST DUCT ENTERING OR LEAVING THE PULLBOX.
8. UNLESS INDICATED OTHERWISE, CONDUITS SHALL ENTER BOXES AT AN 90 DEGREE ANGLE AND BE FLUSH TO THE WALL WITH FLARED OR BELL ENDS TO PREVENT CABLE DAMAGE.
9. A MINIMUM OF 3" OF #3 CRUSHED ROCK BACKFILL SHALL BE PLACED LOOSELY AT THE BOTTOM OF HANDHOLES OR PULLBOXES. CLEARANCE ABOVE CRUSH ROCK BACKFILL TO BE A MINIMUM OF 3".
10. THE TOP OF ALL UTILITY BOXES SHALL BE INSTALLED FLUSH WITH FINISH GRADE WHEN INSTALLED IN SIDEWALK OR PLANTER STRIP NEAR SIDEWALK. OTHER LOCATIONS TO BE INSTALLED 1" ABOVE FINISH GRADE UNLESS INDICATED OTHERWISE.
11. BACKFILL MATERIAL AROUND ALL WATERLINES SHALL BE SELECT MATERIALS.
12. WATER WORKS INSPECTION SHALL BE CONDUCTED AT ALL WATERLINE CROSSINGS.
13. THE CONTRACTOR SHALL MAINTAIN A 18" MINIMUM SEPARATION BETWEEN WATERLINES AND TOP OF DIRECT BURIED UTILITY CONDUITS. WHEN UTILITY CONDUITS ARE CONCRETE ENCASED AT INTERSECTION OF WATERLINE AND UTILITY CONDUITS, A 18" MINIMUM SEPARATION BETWEEN WATERLINE AND OUTER EDGE OF CONCRETE ENCASING THE UTILITY CONDUITS SHALL BE MAINTAINED. STONES, ROCKS, ETC. SHALL NOT BE USED WITH BACKFILL MATERIAL. CONTRACTOR SHALL NOTIFY THE DEPARTMENT OF WATER 24 HOURS PRIOR TO SCHEDULED ELECTRICAL/WATER TRENCH BACKFILLING OPERATIONS.
14. THE LOCATION OF OVERHEAD AND UNDERGROUND FACILITIES SHOWN ON THE PLANS ARE FROM EXISTING RECORDS WITH VARYING DEGREES OF ACCURACY AND ARE NOT GUARANTEED AS SHOWN. THE CONTRACTOR SHALL EXERCISE EXTREME CAUTION WHENEVER CONSTRUCTION CROSSES OR IS IN CLOSE PROXIMITY OF UNDERGROUND LINES AND SHALL MAINTAIN ADEQUATE CLEARANCE WHEN OPERATING EQUIPMENT EQUIPMENT WITHIN OR UNDER ANY OVERHEAD LINES. ANY DAMAGES TO THE EXISTING FACILITIES SHALL BE REPAIRED BY RESPECTIVE UTILITY CO AND PAID BY CONTRACTOR.
15. WHEN TRENCH EXCAVATION IS ADJACENT TO EXISTING STRUCTURES OR FACILITIES, THE CONTRACTOR IS RESPONSIBLE FOR PROPERLY SHEETING AND BRACING THE EXCAVATION AND STABILIZING THE EXISTING GROUND TO RENDER IT SAFE AND SECURE FROM POSSIBLE SLIDES, CAVE–INS, AND SETTLEMENT, AND FOR PROPERLY SUPPORTING EXISTING STRUCTURES AND FACILITIES WITH BEAMS, STRUTS, OR UNDERPINNING TO FULLY PROTECT IT FROM DAMAGE.
16. SHOULD IT BECOME NECESSARY, ANY WORK REQUIRED TO RELOCATE EXISTING UTILITY FACILITIES SHALL BE DONE BY RESPECTIVE UTILITY CO. THE CONTRACTOR SHALL BE RESPONSIBLE FOR COORDINATION.

HANDHOLE SCHEDULE

ITEM	DESCRIPTION
1A	KIUC 2' X 4' PULLBOX
1B	KIUC 3' X 5' HANDHOLE
1C	KIUC 4' X 6' HANDHOLE
1D	KIUC 5' X 7' HANDHOLE
1E	KIUC 6' X 11' HANDHOLE
2A	HTCO 12" X 20" PULLBOX
2B	HTCO/SIC 13" X 24" X 30" HANDHOLE
2C	HTCO/SIC 2' X 4' HANDHOLE
2D	HTCO/SIC 30" X 48" X 33" HANDHOLE
2E	HTCO/SIC 3' X 5' HANDHOLE
2F	HTCO/SIC 4' X 6' HANDHOLE
2G	HTCO/SIC 4' X 6' X 5' HANDHOLE
2H	HTCO/SIC 5' X 10'–6" HANDHOLE
3A	CATV 18" X 36" PULLBOX
3B	CATV 2' X 4' PULLBOX
3C	CATV 2' X 6' PULLBOX
3D	CATV 3' X 5' HANDHOLE

JENSON J. SANTOS
LICENSED PROFESSIONAL ENGINEER
No. 14286-E
HAWAII, U.S.A.

This work was prepared by me or under my supervision and I certify that to the best of my knowledge and belief, the design of this project is in accordance with the applicable Professional Engineers, Architects, Surveyors, and Landscape Architects Laws and Rules of the State of Hawai'i.
4/30/24

NOTE: Contractor to check and verify dimension at job before proceeding with work

REVISION	DATE	DESCRIPTION	MADE BY	APPROVED

PROJECT:
DEPARTMENT OF HAWAIIAN HOME LANDS
SITE AND INFRASTRUCTURE IMPROVEMENTS
FOR HANAPĒPĒ RESIDENTIAL LOTS, PHASE 2
TMK: (4) 1-8-007: 003 (PORTION) & (4) 2-8-007: 001 TO 050 (PORTION)
Hanapēpē, Waimea, Kaua'i, Hawai'i

GENERAL NOTES & EQUIPMENT SCHEDULE

THIS DOCUMENT CONTAINS INFORMATION PROPRIETARY TO SSFM INTERNATIONAL, INC. AND IS FURNISHED IN CONFIDENCE FOR THE LIMITED PURPOSE OF EVALUATION, BIDDING OR REVIEW. THIS DOCUMENT OR ITS CONTENTS MAY NOT BE USED FOR ANY OTHER PURPOSE AND MAY NOT BE REPRODUCED OR DISCLOSED TO OTHERS WITHOUT THE PRIOR WRITTEN CONSENT OF SSFM INTERNATIONAL, INC.

DATE
NOVEMBER 2022

SHEET NUMBER
E-101

80 OF 109 SHEETS

2022-11-07 8:32 AM Z:\Acad\PROJECTS\21817\E101_75_21817B_Gen Notes & Equip Sched

NOTES FOR KIUC SYSTEM:

1. THESE NOTES ARE NOT INTENDED TO BE USED IN PLACE OF THE SERVICE INSTALLATION MANUAL, PLEASE REFER TO SERVICE INSTALLATION MANUAL FOR ALL SERVICE ISSUES.

2. CONTRACTOR SHALL CONTACT KAUA 'I ISLAND UTILITY COOPERATIVE'S ("KIUC") CONSTRUCTION COORDINATOR/INSPECTOR PRIOR TO START OF WORK ON KIUC FACILITIES AND FOR SCHEDULING SITE INSPECTIONS. [WESTSIDE: 246-2323, EASTSIDE: 246-4343]

3. CONTRACTOR SHALL CONTACT KIUC'S DISTRIBUTION PLANNING COORDINATOR @ 246-2373 FOR DESIGN APPROVALS, STANDARD DETAIL DRAWINGS, AND ANY ITEMS NOT ADDRESSED IN THESE NOTES OR DRAWINGS.

4. ALL CONTRACTORS ENTERING KIUC FACILITIES MUST BE APPROVED BY KIUC AND MUST HAVE PROPER LICENSING AND INSURANCE COVERAGE. CONTACT KIUC LEGAL COORDINATOR (TEL: 246-4369) FOR DETAILS.

5. ALL TRENCHES AND PULLBOXES MUST BE INSPECTED BY KIUC PRIOR TO BACKFILLING AND CONCRETE-ENCASING OPERATIONS. FOR DETAILED TRENCHING AND BACKFILLING REQUIREMENTS REFER TO KIUC'S SERVICE INSTALLATION MANUAL.

6. THE CONTRACTOR SHALL PROVIDE A POLY-LINE 200 LB. TEST LINE OR EQUIVALENT AS A PULLING WIRE IN ALL 1", 2", 3" AND 4" KIUC CONDUITS. IN ALL 5" AND 6" CONDUITS, THE CONTRACTOR SHALL INSTALL NEPTCO WP1800 MULETAPE AS A PULLING LINE.

7. ALL CONDUITS, PULLBOXES, HANDHOLES, AND MANHOLES SHALL BE CLEANED AND FREE FROM OBJECTIONABLE MATERIALS. CONDUIT ENDS SHALL BE ADEQUATELY COVERED UNTIL THE CONDUCTOR IS INSTALLED BY THE ELECTRIC COMPANY. (COVERS SHALL BE CARLON PLUG WITH PULL TAB SERIES P258 EQUIVALENT OR BETTER.)

8. FOR ALL CONDUITS OTHER THAN FOR SERVICES, REFER TO CONDUIT SCHEDULE ON DRAWINGS.

9. FOR ALL ELECTRIC SERVICES WHERE THE CONDUCTOR IS 3/0 OR LESS, THE DISTANCE FROM KIUC HANDHOLE AND CUSTOMER'S METER IS LESS THAN 125 FEET, AND NOT CROSSING ANY DRIVEWAYS OR ROADS, THE CONDUIT SHALL BE 2-INCH SCHEDULE 40 PVC. FOR SERVICES GREATER THAN 125 FEET BUT LESS THAN 150 FEET, CONTACT KIUC PLANNER FOR FIELD VERIFICATION AND UNDERGROUND SERVICE REQUIREMENTS. ANY DEVIATIONS WILL REQUIRED KIUC WRITTEN APPROVAL.

10. PRIMARY, SECONDARY AND SERVICE CONDUITS FOR NEW LINE EXTENSIONS SHALL BE SCHEDULE 40 PVC. (CARLON P&C DUCT TYPE DB EQUIVALENT OR BETTER). UNDER DRIVEWAYS AND ROADWAYS, THE CONDUITS SHALL BE ENCASED IN A MINIMUM 3-INCH CONCRETE JACKET.

11. SCHEDULE 80 PVC CONDUIT MAY BE SUBSTITUTED FOR THE CONCRETE ENCASED SCHEDULE 40 PVC FOR SERVICE CONDUIT ONLY CROSSING UNDER UNPAVED PRIVATE DRIVEWAYS & ROADWAYS FROM KIUC POLE/ HANDHOLE TO CUSTOMER'S METER. IF CONCRETE DRIVEWAY WILL BE BUILT OVER SERVICE CONDUIT IMMEDIATELY AFTER CONDUIT IS INSTALLED, THEN SCHEDULE 40 PVC MAY BE USED PROVIDED THAT IT MEETS WITH RULE NO. 21.

12. ALL PRIMARY AND SECONDARY CONDUITS WHICH ARE CROSSING STATE OR COUNTY ROADWAYS SHALL BE SCHEDULE 40 PVC ENCASED IN A MINIMUM 3-INCH CONCRETE JACKET, WHICH SHALL EXTEND A MINIMUM 12-INCHES OUTSIDE OF THE EDGE OF PAVEMENT.

13. ELECTRIC SUPPLY DUCTS, WHEN INSTALLED NEAR COMMUNICATIONS CABLES, SHALL BE SEPARATED FROM COMMUNICATION DUCT SYSTEMS AND BURIED COMMUNICATION CABLES OR CONDUCTORS BY NOT LESS THAN 3-INCHES OF CONCRETE OR 12-INCHES OF EARTH WHEN PARALLELING OR CROSSING.

14. CHAIRS SHALL BE INSTALLED AND SPACED AT A MAXIMUM OF 5 FEET SEPARATION WHEN CONCRETE ENCASING CONDUITS.

15. ALL CONDUITS SHALL ENTER BOXES AT A 90 DEGREE ANGLE, PERPENDICULAR AND FLUSH TO THE WALL WITH BELL ENDS TO PREVENT CABLE DAMAGE.

16. 90-DEGREE CONDUIT BENDS SHALL BE FACTORY MADE WITH A MINIMUM RADIUS OF THREE FEET IN TRENCH RUNS.

17. CONDUIT BENDS EXCEEDING 90-DEGREES WILL NOT BE ACCEPTED.

18. A 36 INCH MINIMUM HORIZONTAL CLEARANCE SHALL BE MAINTAINED WHEN RUNNING KIUC CONDUIT PARALLEL TO WATER AND SEWER LINES. IF CLEARANCE IS LESS THAN 36-INCHES, KIUC CONDUIT SHALL BE CONCRETE ENCASED.

19. NO FOREIGN PULLBOXES, HANDHOLES, MANHOLES, CONCRETE SLAB/BOXES, STRUCTURES, ETC. ARE TO BE INSTALLED OVER KIUC FACILITIES WITH THE EXCEPTION OF HTCO, CATV OR WATERLINE CONDUIT CROSSINGS. SUCH CROSSINGS MUST BE APPROVED BY KIUC SERVICE ASSURANCE DEPART-MENT AND THE KIUC CONDUIT SHALL BE CONCRETE ENCASED. CONCRETE ENCASEMENT MUST BE MINIMUM OF 3-INCH ENCASEMENT AND EXTEND A MINIMUM OF 1 FOOT BEYOND CROSSING CONDUIT OR PIPE.

20. YELLOW MARKER TAPE TO BE PLACED 1 FOOT ABOVE ELECTRICAL CONDUITS IN THE TRENCH DURING BACKFILLING. (E-Z CODE WBT 6 INCH WIDE, 4 MIL POLYETHYLENE PROTECT-A-LINE WARNING TAPE NA-0708 ELECTRIC LINE IN YELLOW, EQUIVALENT OR BETTER.)

21. UNLESS OTHERWISE NOTED, THE TOP OF ALL CONDUITS SHALL BE AT A DEPTH OF 24-INCHES.

22. ALL HANDHOLES, PULLBOXES, AND MANHOLES SHALL BE WALKER INDUSTRIES TYPE OR APPROVED EQUAL. CONTACT KIUC PRIOR TO ORDERING UNDERGROUND BOXES FOR VENDOR APPROVAL. CUSTOMER TO SUBMIT MANUFACTURER'S SHOP DRAWINGS IF SUBSTITUTING FROM WALKER INDUSTRIES TYPE.

23. TYPICALLY, THE TOP OF ALL ELECTRICAL UTILITY BOXES SHALL BE 1-INCH ABOVE FINISH GRADE, SINGLE-PHASE TRANSFORMER PADS SHALL BE 2-INCHES ABOVE FINISHED GRADE, AND THREE-PHASE TRANSFORMER PADS SHALL BE 4-INCHES ABOVE FINISHED GRADE, UNLESS OTHERWISE NOTED. (SPECIAL CONDITIONS MAY APPLY TO SIDEWALKS, ROADWAYS, ETC., SEE SPECIFIC LOCATION NOTATION)

24. AT NO TIME SHALL CEMENT MORTAR, WOOD OR ANY OTHER MATERIAL BE USED BETWEEN PRE-CAST SECTIONS OF KIUC PULLBOXES, HANDHOLES, OR MANHOLES. THE PERMANENT INSTALLATION OF WOODEN WEDGES TO LEVEL OR RAISE THE PRE-CAST SECTIONS SHALL NOT BE PERMITTED.

25. A MINIMUM OF 6-INCHES OF #3 CRUSHED ROCK BACKFILL SHALL BE PLACED LOOSELY BENEATH THE BOTTOM SECTION OF HANDHOLES AND PULLBOXES. CRUSHED ROCK OR OTHER FOREIGN MATERIAL SHALL NOT BE PLACED INSIDE HANDHOLES AND PULLBOXES.

WATER NOTES:

1. THE CONTRACTOR SHALL VERIFY IN THE FIELD THE LOCATION OF THE EXISTING WATER FACILITIES PRIOR TO TRENCHING. EXCAVATION AROUND EXISTING WATER FACILITIES SHALL BE DONE BY HAND.

2. MATERIAL USED FOR BACKFILLING AT THE WATER FACILITIES CROSSINGS SHALL NOT CONTAIN ANY STONES, ROCKS OR OTHER SIMILAR MATERIAL AND SHALL NOT CONTAIN VEGETABLE MATTER OR DEBRIS OF ANY KIND. NO "ADOBE" OR SIMILAR MATERIAL SHALL BE USED.

3. PROVIDE CONCRETE ENCASEMENT FOR THE CONDUITS AT ALL WATERLINE, SERVICE LATERAL AND HYDRANT CROSSINGS. CONCRETE JACKET THE DUCT SECTION A MINIMUM OF 3 LINEAR FEET ON BOTH SIDES OF THE WATERLINECROSSING(S). THE CONTRACTOR SHALL NOTIFY THE DEPARTMENT OF WATER AT LEAST 24 HOURS PRIOR TO SCHEDULING BACKFILLING OPERATIONS AT THE WATER FACILITIES CROSSINGS.

4. CLEARANCE BETWEEN WATERLINE AND OTHER UTILITIES SHALL CONFORM TO TABLE 100-1 – WATERLINE CLEARANCES OF THE WATER SYSTEM STANDARDS 2002, AS AMENDED.

APPROVED BY:

KAUA'I ISLAND UTILITY COOPERATIVE — DATE

HAWAIIAN TELCOM — DATE

SPECTRUM — DATE

JENSON J. SANTOS
LICENSED PROFESSIONAL ENGINEER
No. 14286-E
HAWAII, U.S.A.

This work was prepared by me or under my supervision and I am a duly licensed professional engineer under the laws of the State of Hawaii. Professional Engineers, Architects, Surveyors, and Landscape Architects.

4/30/24
Date of Signature
Expiration date of the license

NOTE: Contractor to check and verify dimension at job before proceeding with work

REVISION	DATE	DESCRIPTION	MADE BY	APPROVED

PROJECT:
DEPARTMENT OF HAWAIIAN HOME LANDS
SITE AND INFRASTRUCTURE IMPROVEMENTS
FOR HANAPĒPĒ RESIDENTIAL LOTS, PHASE 2
TMK: (4) 1-8-007: 003 (PORTION) & (4) 2-8-007: 001 TO 050 (PORTION)
Hanapēpē, Waimea, Kaua'i, Hawai'i

KIUC AND HTCO NOTES

THIS DOCUMENT CONTAINS INFORMATION PROPRIETARY TO SSFM INTERNATIONAL, INC. AND IS FURNISHED IN CONFIDENCE FOR THE LIMITED PURPOSE OF EVALUATION, BIDDING OR REVIEW. THIS DOCUMENT OR ITS CONTENTS MAY NOT BE USED FOR ANY OTHER PURPOSE AND MAY NOT BE REPRODUCED OR DISCLOSED TO OTHERS WITHOUT THE PRIOR WRITTEN CONSENT OF SSFM INTERNATIONAL, INC.

DATE
NOVEMBER 2022

SHEET NUMBER
E-102

81 OF 109 SHEETS

2022-11-07 8:32 AM Z:\Acad\PROJECTS\21817\E\E102_76_21817B_KIUC and HTCO Notes

HAWAIIAN TELCOM GENERAL CONSTRUCTION/DESIGN NOTES:

1. THE CONTRACTOR SHALL PROCURE AND PAY FOR ALL LICENSES AND PERMITS AND SHALL GIVE ALL NOTICES NECESSARY AND INCIDENT TO THE DUE AND LAWFUL PROSECUTION OF THE WORK.

2. THE CONTRACTOR SHALL OBTAIN AN EXCAVATION PERMIT AND TONING REQUEST FROM HAWAIIAN TELCOM'S EXCAVATION PERMIT SECTION, LOCATED AT 1177 BISHOP STREET, TWO WEEKS PRIOR TO THE START OF CONSTRUCTION. HOURS FOR DROP OFF/PICK UP ARE 8:00 A.M. TO 11:00 A.M. AND 1:00 P.M. TO 3:00 P.M. MONDAY THROUGH FRIDAY, EXCEPT HOLIDAYS.

3. PRIOR TO THE EXCAVATION OF THE DUCTLINE, THE CONTRACTOR SHALL REQUEST HAWAIIAN TELCOM TO LOCATE EXISTING DUCTLINE WHEREVER REQUIRED. FOR UNDERGROUND CABLE LOCATING AND MARKING, FIVE (5) WORKING DAYS' ADVANCE NOTICE IS REQUIRED. THREE (3) WORKING DAYS' ADVANCE NOTICE IS REQUIRED FOR ANY INSPECTION BY A DESIGNATED REPRESENTATIVE.

4. THE LOCATIONS OF EXISTING UTILITIES ARE APPROXIMATE ONLY. THE CONTRACTOR SHALL EXERCISE EXTREME CAUTION AND SHALL MAINTAIN PROPER CLEARANCES WHENEVER CONSTRUCTION CROSSES OR IS IN CLOSE PROXIMITY OF HAWAIIAN TELCOM FACILITIES. THE CONTRACTOR SHALL VERIFY THEIR LOCATIONS AND SHALL BE LIABLE FOR ANY DAMAGES TO HAWAIIAN TELCOM FACILITIES. ANY DAMAGES SHALL BE REPORTED IMMEDIATELY TO HAWAIIAN TELCOM'S REPAIR SECTION AT #611 (24 HOURS) OR TO THE EXCAVATION PERMIT SECTION AT 546-7746 (NORMAL WORKING HOURS, MONDAY THROUGH FRIDAY, EXCEPT HOLIDAYS). AS A RESULT OF HIS OPERATIONS, ADJUSTMENTS TO THE NEW DUCTLINE ALIGNMENT, IF REQUIRED, SHALL BE MADE TO PROVIDE THE REQUIRED CLEARANCES.

5. THE CONTRACTOR SHALL TAKE NECESSARY PRECAUTION NOT TO DAMAGE EXISTING CABLES OR DUCTS. A HAWAIIAN TELCOM INSPECTOR OR DESIGNATED REPRESENTATIVE IS REQUIRED TO BE AT ANY JOB SITE WHENEVER THERE WILL BE A BREAKAGE INTO OR ENTRY INTO ANY STRUCTURE THAT CONTAIN HAWAIIAN TELCOM FACILITIES. TEMPORARY CABLE AND DUCT SUPPORTS SHALL BE PROVIDED WHEREVER NECESSARY.

6. THE CONTRACTOR SHALL NOTIFY HAWAIIAN TELCOM'S INSPECTOR OR DESIGNATED REPRESENTATIVE A MINIMUM OF 72 HOURS PRIOR TO EXCAVATION, BRACING, OR BACKFILLING OF HAWAIIAN TELCOM'S STRUCTURES OR FACILITIES.

7. ALL APPLICABLE CONSTRUCTION WORK SHALL BE DONE IN ACCORDANCE WITH THE "HAWAIIAN TELCOM STANDARD SPECIFICATIONS FOR PLACING UNDERGROUND TELEPHONE SYSTEMS" DATED JANUARY 2007. ALL SUBSEQUENT AMENDMENTS AND ADDITIONS, AND ALL OTHER PERTINENT STANDARDS FOR TELEPHONE CONSTRUCTION. CONTRACTOR SHALL FAMILIARIZE HIS PERSONNEL BY OBTAINING APPLICABLE SPECIFICATIONS.

8. WHEN EXCAVATION IS ADJACENT TO OR BENEATH HAWAIIAN TELCOM'S EXISTING STRUCTURES OR FACILITIES, THE CONTRACTOR SHALL:
   a) SHEET AND/OR BRACE THE EXCAVATION TO PREVENT SLIDES, CAVE-INS, OR SETTLEMENTS TO ENSURE NO MOVEMENT TO HAWAIIAN TELCOM'S STRUCTURES OR FACILITIES.
   b) PROTECT EXISTING STRUCTURES AND/OR FACILITIES WITH BEAMS, STRUTS, OR UNDERPINNING WHILE EXCAVATING BENEATH THEM TO ENSURE NO MOVEMENT TO HAWAIIAN TELCOM'S STRUCTURES OR FACILITIES.

9. THE CONTRACTOR SHALL BRACE ALL POLES OR LIGHT STANDARDS NEAR THE NEW DUCTLINE, MANHOLE, OR HANDHOLE DURING HIS OPERATIONS.

10. THE CONTRACTOR SHALL SAW-CUT A.C. PAVEMENT AND CONCRETE GUTTER WHEREVER NEW MANHOLES, HANDHOLES, OR DUCTLINES ARE TO BE PLACED AND SHALL RESTORE TO EXISTING CONDITION OR BETTER.

11. THE CONTRACTOR SHALL COMPLY WITH THE POLICY ADOPTED BY THE DEPARTMENT OF PUBLIC WORKS, CITY AND COUNTY OF HONOLULU, CONCERNING THE REPLACEMENT OF CONCRETE SIDEWALKS AFTER EXCAVATION WORK.

12. THE UNDERGROUND PIPES, CABLES, OR DUCTLINES KNOWN TO EXIST BY THE ENGINEER FROM HIS SEARCH OF RECORDS ARE INDICATED ON THE PLANS. THE CONTRACTOR SHALL VERIFY THE LOCATIONS AND DEPTHS OF THE FACILITIES AND EXERCISE PROPER CARE IN EXCAVATING IN THE AREA. WHEREVER CONNECTIONS OF NEW UTILITIES TO EXISTING UTILITIES ARE SHOWN ON THE PLANS, THE CONTRACTOR SHALL EXPOSE THE EXISTING LINES AT THE PROPOSED CONNECTIONS TO VERIFY THEIR LOCATIONS AND DEPTHS PRIOR TO EXCAVATION FOR THE NEW LINES.

13. WHEREVER CONNECTIONS TO EXISTING UTILITIES ARE SHOWN ON THE PLANS, THE CONTRACTOR SHALL EXPOSE THE EXISTING LINES PRIOR TO EXCAVATION OF THE MAIN TRENCHES TO VERIFY THEIR LOCATIONS AND DEPTHS.

14. THE CONTRACTOR, AT HIS OWN EXPENSE, SHALL KEEP THE PROJECT AND SURROUNDING AREA FREE FROM DUST NUISANCE. THE COST FOR SUPPLEMENTARY MEASURES, WHICH WILL BE REQUIRED BY THE CITY AND COUNTY, SHALL BE BORNE BY THE CONTRACTOR.

15. THE CONTRACTOR SHALL PUMP ALL MANHOLES DRY DURING FINAL INSPECTION.

16. THE CONTRACTOR SHALL NOTIFY HAWAIIAN TELCOM INSPECTOR 24 HOURS PRIOR TO THE POURING OF CONCRETE OR BACKFILLING.

17. WHEN CONNECTING TO MANHOLE WALLS, ALL EXISTING REINFORCING BARS SHALL BE LEFT INTACT. DUCTS SHALL BE ADJUSTED IN THE FIELD IN ORDER TO CLEAR REINFORCING

18. THE CONTRACTOR SHALL BE RESPONSIBLE FOR LAYING OUT ALL REQUIRED LINES AND GRADES AND SHALL PRESERVE ALL BENCH MARKS AND WORKING POINTS NECESSARY TO LAY OUT THE WORK CORRECTLY. THE NEW DUCTLINE SHALL BE ADJUSTED BY THE CONTRACTOR TO SUIT THE EXISTING CONDITIONS AND THE DETAILS AS DESCRIBED IN THE PLANS.

19. MINIMUM CONCRETE STRENGTH SHALL BE:
    FOR DUCTLINE — 2500 PSI AT 28 DAYS
    FOR MANHOLE — 3000 PSI AT 28 DAYS OR AS SPECIFIED IN DESIGN NOTES

20. BENDS IN THE DUCT ALIGNMENT, DUE TO CHANGES IN GRADE SHALL HAVE A MINIMUM RADIUS OF 25 FEET. ALL 90 DEGREE C-BENDS AT A POLE OR AT THE BUILDING FLOOR SLAB PENETRATION, SHALL HAVE A BEND RADIUS OF TEN TIMES THE DIAMETER OF THE DUCT OR GREATER.

21. AFTER DUCTLINE HAS BEEN COMPLETED, A MANDREL WITH A SQUARE FRONT NOT LESS THAN 12" LONG AND HAVING A DIAMETER OF 1/4" LESS THAN THE INSIDE DIAMETER OF THE DUCT, SHALL BE PULLED THROUGH EACH DUCT AFTER WHICH A BRUSH WITH STIFF BRISTLES SHALL BE PULLED THROUGH TO MAKE CERTAIN THAT NO PARTICLES OF EARTH, SAND, OR GRAVEL HAVE BEEN LEFT INSIDE. DUCTS SHALL BE COMPLETELY DRY AND CLEAN.

22. ALL DUCTS AND CONDUITS SHALL HAVE AN 1800# POLYESTER MULE-TAPE (NEPTCO, WP1800P, HAWAIIAN TELCOM MATERIAL CODE NO. 571154) INSTALLED THROUGHOUT ITS ENTIRE LENGTH. ALL DUCTS SHALL BE CAPPED TO PREVENT ENTRY OF FOREIGN MATERIAL DURING CONSTRUCTION AND AT THE COMPLETION OF INSTALLATION.

HAWAIIAN TELCOM UNDERGROUND CONSTRUCTION STANDARDS FOR RESIDENTIAL PROPERTY:

A. SERVICE CONNECTION: 320' FREE ALLOWANCE FOR AERIAL AND 500' FOR U.G.

B. RESIDENTIAL UNDERGROUND CONDUIT REQUIREMENTS:

1. RECOMMEND 18" BUT NOT LESS THAN 12" ON PRIVATE PROPERTY, 24" MINIMUM ON CITY & COUNTY RIGHT OF WAY, AND 36" MINIMUM ON STATE HIGHWAYS.

2. TRENCH SHALL HAVE A FLAT SURFACE AND SHALL BE DEEP ENOUGH TO OBTAIN MINIMUM COVER.

   a. FIRST 6 INCHES OF BACKFILL MUST BE SOFT EARTH OR SAND AND FREE OF ROCKS. FILL MUST BE ABLE TO PASS THROUGH A 1/2" SCREEN.

3. CONDUIT RUNS OF 150' AND MULTIPLES THEREOF SHALL HAVE INTERMEDIATE PULLBOX. IF IMPRACTICAL TO PLACE A PULLBOX AND CONDUIT RUNS ARE 1.5 (225') TO 2.5 (375') TIMES GREATER THAN 150', USE THE NEXT LARGER SIZE CONDUIT.

4. MANUFACTURED 90-DEGREE DUCT BENDS MAY BE USED ONLY FOR SERVICE POLE, EQUIPMENT RISERS, OR BUILDING ENTRY, UNLESS SPECIFICALLY INDICATED AS ACCEPTABLE. THE MINIMUM MANUFACTURED BEND RADIUS SHALL BE 24 INCHES FOR DUCTS LESS THAN 3-INCH DIAMETER, AND 36 INCHES FOR 3 INCHES OR GREATER DIAMETER. OTHERWISE, LONG SWEEP BENDS HAVING A MINIMUM RADIUS OF 25 FEET SHALL BE USED FOR A CHANGE OF DIRECTION OF MORE THAN 5 DEGREES, EITHER HORIZONTALLY OR VERTICALLY. BOTH CURVED AND STRAIGHT SECTIONS MAY BE USED TO FORM LONG SWEEP BENDS AS REQUIRED, BUT MAXIMUM CURVE SHALL BE 30 DEGREES.

5. SERVICE ENTRANCE SHALL BE LOCATED OUTSIDE AND MUST BE ACCESSIBLE AT ALL TIME. ENTRY LOCATION MUST CONFORM TO CURRENT NEC CODE REQUIREMENTS. CONDUIT AT HOUSE SHALL RISE NO MORE THAN 5' AND NOT LESS THAN 2' ABOVE GRADE.

6. CONDUIT RISER ON SERVICE POLE SHALL TERMINATE AT LEAST 6" ABOVE GRADE WITH RISER ENDS CAPPED WITH WEATHER HEAD OR PLUGGED WITH DUCT SEAL.

   a. WHEN TELEPHONE AND ELECTRIC SERVICE CONDUITS TERMINATE ON THE SAME SERVICE POLE, PREFERABLY, THE TWO CONDUITS SHOULD BE PLACED OPPOSITE EACH OTHER ON THE SERVICE POLE. HOWEVER, IT IS PERMISSIBLE TO PLACE CONDUITS WITH LESS SEPARATION BUT NOT LESS THAN 1/4 OF THE CIRCUMFERENCE OF THE POLE (CLIMBING SPACE MUST BE MAINTAINED).

   b. RISER CONDUIT SHALL BE PROPERLY STRAPPED.

   c. MULETAPE OR APPROVED EQUIVALENT SHALL BE INSTALLED IN ALL CONDUITS.

7. CONDUIT SIZE – DEPENDS ON CUSTOMER'S SERVICE NEEDS:

   TELEPHONE SERVICE ONLY
   1-1/2" – 1-4 DROPS
   2" – MULTI DROP CABLE
   4" – CABLE

   NOTES:

   a. CUSTOMER RETAINS OWNERSHIP OF CONDUIT SYSTEM ON PRIVATE PROPERTY AND IS RESPONSIBLE FOR COST OF MAINTENANCE AND/OR REPAIRS.

   b. HAWAIIAN TELCOM RETAINS OWNERSHIP OF DROP UP TO PROTECTOR AND IS RESPONSIBLE FOR THE COST OF MAINTENANCE AND/OR REPAIRS.

   c. CUSTOMER TO INSURE CONDUIT AND PULLBOXES ARE FREE FROM OBSTRUCTION PRIOR TO INSTALLATION OF SERVICE DROP(S).

1. FOR SERVICE DROP ONLY, INSTALL 436T WATER METER PULLBOX(ES) (20-1/4" X 12-3/8" X 12-0"), WITH METAL COVER OR APPROVED EQUAL.

2. CLEARANCE FROM POWER – 3" WHEN ENCASED IN CONCRETE; 4" WHEN SEPARATED WITH BRICK OR MASON; 12" OF WELL TAMPED EARTH. SIX INCHES WHEN CROSSING FOREIGN OBJECTS, I.E., POWER, WATER OR SEWER PIPE, ETC.

3. MINIMUM ROAD CROSSING REQUIREMENTS:

SIZE	TYPE	METHOD OF CONSTRUCTION
2"	PVC SCHEDULE 40	DIRECT BURIED
4"	GTS-8342 "DB"	CONCRETE ENCASED

4. STRONGLY RECOMMEND THAT TREES WITH AGGRESSIVE ROOT SYSTEMS ARE NOT PLANTED NEAR CONDUIT SYSTEM.

C. LIMITING LENGTHS OF LATERAL OR SUBSIDIARY DUCTS:

CABLE DIAMETER (INCHES)	LIMITING LENGTHS OF SUBSIDIARY DUCTS (FEET) NO 90° BEND	1-90° BEND	2-90° BEND	MINIMUM DIAMETER OF DUCT (INCHES)
LESS THAN 1"	750	500	200	2.0
1.00 TO 1.20	750	500	300	4.0
1.21 TO 1.40	600	400	275	4.0
1.41 TO 1.60	525	400	250	4.0
1.61 TO 1.80	450	300	200	4.0
1.81 TO 2.15	375	250	150	4.0
2.16 TO 2.61	300	200	100	4.0
2.62 TO 2.96	300	200	---	4.0

APPROVED BY:

KAUA'I ISLAND UTILITY COOPERATIVE — DATE

HAWAIIAN TELCOM — DATE

SPECTRUM — DATE

JENSON J. SANTOS
LICENSED PROFESSIONAL ENGINEER
No. 14286-E
HAWAII, U. S. A.

This work was prepared by me or under my supervision and construction of this project will be under my observation. (Observation of construction as defined in Chapter 16-115, Subchapter 1 Definitions of the Hawaii Administrative Rules, Professional Engineers, Architects, Surveyors, and Landscape Architects)

signature — 4/30/24 expiration date of the license

NOTE: Contractor to check and verify dimensions at job before proceeding with work.

REVISION	DATE	DESCRIPTION	MADE BY	APPROVED

PROJECT:
DEPARTMENT OF HAWAIIAN HOME LANDS
SITE AND INFRASTRUCTURE IMPROVEMENTS
FOR HANAPĒPĒ RESIDENTIAL LOTS, PHASE 2
TMK: (4) 1-8-007: 003 (PORTION) & (4) 2-8-007: 001 TO 050 (PORTION)
Hanapēpē, Waimea, Kaua'i, Hawai'i

HTCO NOTES

THIS DOCUMENT CONTAINS INFORMATION PROPRIETARY TO SSFM INTERNATIONAL, INC., AND IS FURNISHED IN CONFIDENCE FOR THE LIMITED PURPOSE OF EVALUATION, BIDDING OR REVIEW. THIS DOCUMENT OR ITS CONTENTS MAY NOT BE USED FOR ANY OTHER PURPOSE AND MAY NOT BE REPRODUCED OR DISCLOSED TO OTHERS WITHOUT THE PRIOR WRITTEN CONSENT OF SSFM INTERNATIONAL, INC.

DATE
NOVEMBER 2022

SHEET NUMBER
E-103

2022-11-07 8:34 AM Z:\Acad\PROJECTS\218171B\E103_77_218171B_HTCO Notes

SPECTRUM (CATV) NOTES:

1. THE CONTRACTOR SHALL PROCURE AND PAY FOR ALL LICENSES AND PERMITS AND SHALL GIVE ALL NOTICES NECESSARY AND INCIDENT TO THE DUE AND LAWFUL PROSECUTION OF THE WORK.

2. THE LOCATIONS OF EXISTING UTILITIES ARE APPROXIMATE ONLY. THE CONTRACTOR SHALL VERIFY THEIR LOCATIONS AND SHALL BE RESPONSIBLE FOR ANY DAMAGES TO THESE UTILITIES AS A RESULT OF HIS OPERATIONS. ADJUSTMENTS TO THE NEW DUCTLINE ALIGNMENT, IF REQUIRED, SHALL BE MADE TO PROVIDE THE REQUIRED CLEARANCES.

3. THE CONTRACTOR SHALL BRACE ALL POLES OR LIGHT STANDARDS NEAR THE NEW DUCTLINE, MANHOLE OR HANDHOLE DURING ITS OPERATIONS.

4. THE CONTRACTOR SHALL SAW-CUT A.C. PAVEMENT, CONCRETE GUTTER, AND CONCRETE SIDEWALK WHEREVER NEW MANHOLES, HANDHOLES, PULLBOXES OR DUCTLINES ARE TO BE PLACED AND SHALL RESTORE TO EXISTING CONDITION OR BETTER.

5. THE UNDERGROUND PIPES, CABLES, OR DUCTLINES KNOWN TO EXIST BY THE ENGINEER FROM HIS SEARCH OF RECORDS ARE INDICATED ON THE PLANS. THE CONTRACTOR SHALL VERIFY THE LOCATIONS AND DEPTHS OF THE FACILITIES AND EXERCISE PROPER CARE IN EXCAVATING IN THE AREAS. WHEREVER CONNECTIONS OF NEW UTILITIES TO EXISTING UTILITIES ARE SHOWN ON THE PLANS, THE CONTRACTOR SHALL EXPOSE THE EXISTING LINES AT THE PROPOSED CONNECTIONS TO VERIFY THEIR LOCATIONS AND DEPTHS PRIOR TO EXCAVATION FOR THE NEW LINES.

6. THE CONTRACTOR, AT HIS OWN EXPENSE, SHALL KEEP THE PROJECT AND SURROUNDING AREA FREE FROM DUST NUISANCE. THE WORK SHALL BE IN CONFORMANCE WITH THE AIR POLLUTION CONTROL STANDARDS AND REGULATIONS OF THE STATE OF HAWAI'I, DEPARTMENT OF HEALTH. THE COST FOR SUPPLEMENTARY MEASURES, WHICH WILL BE REQUIRED BY THE CITY AND COUNTY, SHALL BE BORNE BY THE CONTRACTOR.

7. PRIOR TO THE EXCAVATION OF THE DUCTLINE, THE CONTRACTOR SHALL REQUEST SPECTRUM TO LOCATE EXISTING DUCTLINE WHEREVER REQUIRED.

8. THE CONTRACTOR SHALL TAKE NECESSARY PRECAUTION NOT TO DAMAGE EXISTING CABLES OR DUCTS. ANY WORK INVOLVING EXISTING CABLES OR DUCTS SHALL BE DONE IN THE PRESENCE OF THE SPECTRUM INSPECTOR OR HIS REPRESENTATIVE. TEMPORARY CABLE AND DUCT SUPPORT SHALL BE PROVIDED WHEREVER NECESSARY.

9. THE CONTRACTOR SHALL NOTIFY THE SPECTRUM INSPECTOR 72 HOURS PRIOR TO THE START OF WORK ON CATV INFRASTRUCTURE, POURING CONCRETE, OR BACKFILLING. SPECTRUM INSPECTOR(S): RYAN PANDAY AT 808-855-5150.

10. WHEREVER CONNECTIONS TO EXISTING UTILITIES ARE SHOWN ON THE PLANS, THE CONTRACTOR SHALL EXPOSE THE EXISTING LINES PRIOR TO EXCAVATION OF THE MAIN TRENCHES TO VERIFY THEIR LOCATIONS AND DEPTHS.

11. CONTRACTOR SHALL PROVIDE ALL MATERIALS AND FURNISH ALL LABOR AND EQUIPMENT NECESSARY TO INSTALL THE DUCTLINE IN PLACE COMPLETE.

12. THE CONTRACTOR SHALL BE RESPONSIBLE FOR LAYING OUT ALL REQUIRED LINES AND GRADES AND SHALL PRESERVE ALL BENCH MARKS AND WORKING POINTS NECESSARY TO LAY OUT THE WORK CORRECTLY. THE NEW DUCTLINE SHALL BE ADJUSTED BY THE CONTRACTOR TO SUIT THE EXISTING CONDITIONS AND THE DETAILS AS DESCRIBED IN THE PLANS.

13. THE CONTRACTOR, AT HIS OWN EXPENSES, SHALL KEEP THE PROJECT AREA FREE FROM DUST NUISANCE. THE WORK SHALL BE IN CONFORMANCE WITH THE AIR POLLUTION CONTROL STANDARDS AND REGULATIONS OF THE STATE OF HAWAII, DEPARTMENT OF HEALTH.

14. THE LOCATION OF CATV FACILITIES SHOWN ON PLANS ARE FROM EXISTING RECORDS WITH VARYING DEGREES OF ACCURACY AS TO ITS ACTUAL FIXED LOCATION. THE CONTRACTOR SHALL USE EXTREME CAUTION WHEN WORKING IN CLOSE PROXIMITY OF CATV FACILITIES.

15. THE CONTRACTOR SHALL OBTAIN EXCAVATION PERMIT CLEARANCE FROM SPECTRUM ENGINEERING SECTION LOCATED AT 2956 AUKELE STREET, LĪHU'E HI, 96766.

16. FOR ANY FIELD ASSISTANCE OR VERIFICATION OF CATV FACILITIES, THE CONTRACTOR SHALL CALL SPECTRUM AT 808-625-2100 AND ASK FOR THE OSP ENGINEERING DEPARTMENT.

17. ANY WORK REQUIRED TO RELOCATE CATV FACILITIES SHALL BE DONE BY SPECTRUM AND THE CONTRACTOR SHALL BE RESPONSIBLE FOR ALL COORDINATION REQUIREMENTS AND ASSOCIATED COSTS.

18. ANY DAMAGE TO SPECTRUM FACILITIES SHALL BE REPORTED TO SPECTRUM CONSTRUCTION DEPARTMENT AT 808-855-5150.

19. THE CONTRACTOR SHALL TUNNEL UNDER EXISTING CONCRETE CURB AND GUTTER AS NECESSARY TO EXTEND CONDUIT INTO EXISTING CATV PULLBOX AND INTO THE PROPOSED POWER SUPPLY PULLBOX.

20. ALL EXISTING IMPROVEMENTS THAT ARE DISTURBED DURING THE CONSTRUCTION PHASE SHALL BE RESTORED TO ITS ORIGINAL OR BETTER CONDITION AT NO COST TO THE CITY AND COUNTY IN ACCORDANCE WITH CITY'S STANDARDS.

21. AT LOCATIONS WHERE EXISTING CATV PULLBOX REPLACEMENT IS PROPOSED, THE CONTRACTOR SHALL TAKE ALL NECESSARY PRECAUTION NOT TO DAMAGE THE EXISTING CABLES IN THE PULLBOX. ALL DAMAGES TO EXISTING CABLES SHALL BE REPAIRED BY SPECTRUM AND PAID FOR BY THE CONTRACTOR.

22. SMOOTH FINISH INSIDE WALL OF EXISTING PULLBOXES AND HANDHOLES TO ITS ORIGINAL CONDITION OR BETTER.

23. ALL NEW CONCRETE ENCASED CONDUIT SHALL BE PVC PIPE-SCHEDULE 40. ALL NEW DIRECT-BURIED CONDUIT SHALL BE PVC PIPE-SCHEDULE 80. USE OF ANY OTHER MATERIAL TYPE (GTS, ETC) SHALL BE LIMITED TO MATCHING EXISTING FACILITIES. CONNECTION OF DISSIMILAR MATERIALS TO REQUIRE APPROVAL FROM SPECTRUM OCEANIC'S INSPECTOR AND ENGINEERING DEPT.

24. THE CONTRACTOR SHALL PLACE POLY CORD THROUGHOUT PROJECT, AND SECURE IN MANHOLES, HANDHOLES AND PULLBOXES.

25. FOR 3" CONDUITS OR LARGER, THE CONTRACTOR SHALL INSTALL NEPTCO WP1800 MULETAPE OR APPROVED EQUAL IN ALL DUCTLINES, LEAVE MULETAPE IN PLACE FOR FUTURE USE AS A PULL OR FISH LINE, UNLESS OTHERWISE NOTED. REFERENCE GTE MATERIAL CODE NO. 571154. ALL DUCTS SHALL BE CAPPED TO PREVENT ENTRY OF FOREIGN MATERIAL DURING CONSTRUCTION AND AT COMPLETION OF INSTALLATION. ENDBELLS ARE REQUIRED FOR CONDUITS 2" AND LARGER.

26. PENETRATION INTO PULLBOXES IF NECESSARY TO BE FROM FACTORY INSTALLED OPENING OR FROM BRICKS POSITION. PENETRATION FROM PULLBOX WALLS IS NOT ACCEPTABLE.

27. BENDS IN THE DUCT ALIGNMENT, DUE TO CHANGES IN GRADE SHALL HAVE A MINIMUM RADIUS OF 20-FEET. ALL 90-DEGREE C-BENDS AT A POLE OR AT THE BUILDING FLOOR SLAB PENETRATION SHALL HAVE A BEND RADIUS OF 10 TIMES THE DIAMETER OF THE DUCT OR GREATER.

28. MINIMUM LENGTH OF CONDUIT USED SHALL NOT BE LESS THAN 5-FEET IN LENGTH. USE OF PARTIAL CONDUIT SECTIONS ALLOWABLE IS AT SPECTRUM INSPECTOR(S) DISCRETION.

29. ALL CONDUITS SHALL ENTER THROUGH THE END "SHORT WALL" OF THE PULL-BOX. ENTRY SHALL BE AT 90 DEGREES (PERPENDICULAR) TO WALL FACE WITH BENDS NO LESS THAN 12" FROM EXTERIOR WALL.

30. A MINIMUM OF (2) PRECAST RISER SECTIONS MUST BE USED ON ALL 2X4 OR 2X6 PULLBOXES.

31. ALL NEW CONSTRUCTION SHALL UTILIZE CONCRETE PRECAST BASE UNLESS OTHERWISE APPROVED OR SPECIFIED BY SPECTRUM INSPECTOR(S).

32. WHEN THREE (3) OR MORE 4" CONDUITS ENTER ONE END WALL OF ANY PULLBOX, ONLY BRICK BASES WILL BE ALLOWED UNLESS OTHERWISE INSTRUCTED/APPROVED BY SPECTRUM INSPECTOR(S).

33. TWO MINIMUM LAYERS OF BRICKS TO BE USED LOWER THAN THE LOWEST DUCT ENTERING THE PULLBOX. TOP LAYER OF BRICK TO BE FLUSH WITH TOP OF CONDUIT OR HIGHER.

34. FOR UPGRADE/REPAIRS TO EXISTING PULLBOXES, BRICKS MAY BE USED AND SHALL ALWAYS BE AT LEAST TWO LAYERS LOWER THAN THE LOWEST DUCT ENTERING THE PULLBOX.

35. AT NO TIME SHALL CEMENT MORTAR, WOOD OR ANY OTHER MATERIAL BE USED BETWEEN PRECAST SECTIONS.

36. LEVELING OR RAISING OF BOXES TO GRADE MUST BE DONE:
   A. PRE-CAST BASE(S) – USING GRAVEL LAYER UNDER BASE (TYPE 3B OR EQUIVALENT APPROVED BY SPECTRUM INSPECTOR
   B. BRICK BASE(S) – ADJUSTMENTS TO BRICKWORK SECTION. THE PERMANENT INSTALLATION OF WOODEN WEDGES TO ACCOMPLISH THIS PURPOSE WILL NOT BE ACCEPTED.

37. 5/8" COPPER GROUND RODS SHALL BE PLACED IN ALL PULLBOXES UNLESS OTHERWISE DIRECTED BY SPECTRUM. GROUND RODS WILL BE PLACED IN THE CORNER 3" TO 4" FROM THE WALL AND AWAY FROM ANY CONDUIT WITH NO MORE THAN 8" STICKING UP ABOVE GROUND.

38. TRENCHING TO BE BY HAND DIGGING NEAR AND ACROSS EXISTING UTILITY LINES.

39. MINIMUM CLEARANCE BETWEEN STREET LIGHT STAND AND FIRE HYDRANTS SHALL BE THREE FEET.

40. UNDERGROUND UTILITIES SHOWN HEREON IS FOR INFORMATION ONLY. NO GUARANTEE IS MADE ON THE ACCURACY OR COMPLETENESS OF SAID INSTALLATION.

41. FOR UNDERGROUND CABLE LOCATING AND MARKING, FIVE WORKING DAYS ADVANCE NOTICE IS REQUIRED. THREE WORKING DAYS ADVANCE NOTICE IS REQUIRED FOR ANY INSPECTION BY A DESIGNATED REPRESENTATIVE. CONTRACTOR SHALL TAKE NECESSARY PRECAUTION NOT TO DAMAGE ANY EXISTING CABLES OR DUCTS. SPECTRUM INSPECTOR OR DESIGNATED REPRESENTATIVE IS REQUIRED TO BE AT ANY JOB SITE WHEREVER THERE WILL BE A BREAKAGE INTO OR ENTRY INTO ANY STRUCTURE THAT CONTAIN SPECTRUM FACILITIES.

42. CONCRETE STRENGTH SHALL BE 3000 PSI IN 28 DAYS.

43. CURING AND BACKFILLING. MAINTAIN CONCRETE IN A MOIST CONDITION FOR 24 HOURS MINIMUM FOR 3,000 PSI AND 48 HOURS MINIMUM FOR 2,500 PSI BEFORE COMPACTED BACKFILLING; 72 HOURS MINIMUM BEFORE PERMITTING MOTOR TRAFFIC LOAD ON DUCTLINE CURING METHOD SHALL MEET SPECTRUM INSPECTOR'S APPROVAL.

44. INSTALL 4-MIL. THICK ORANGE COLOR WARNING TAPE 3-INCH WIDE, ENTIRE LENGTH OF TRENCH WHEN PLACING CATV CONDUITS. TAPE SHOULD READ "CAUTION BURIED CABLE LINE BELOW". MANUFACTURED BY HARRIS INDUSTRIES, INC., CATALOG NUMBER UT-43 OR EQUIVALENT TAPE. TAPE TO BE INSTALLED 12-INCHES BELOW GRADE.

45. AFTER DUCTLINE HAS BEEN COMPLETED, A MANDREL WITH A SQUARE FRONT NOT LESS THAN 12-INCH LONG AND HAVING A DIAMETER OF 1/4-INCH LESS THAN THE INSIDE DIAMETER OF DUCT, SHALL BE PULLED THROUGH EACH DUCT AFTER WHICH A BRUSH WITH STIFF BRISTLES SHALL BE PULLED THROUGH TO MAKE CERTAIN THAT NO PARTICLES OF EARTH, SAND, OR GRAVEL HAVE BEEN LEFT INSIDE. DUCTS SHALL BE COMPLETELY DRY AND CLEAN.

46. METALLIC ENTRANCE CONDUITS SHALL BE GROUNDED.

47. ALL CONDUITS WITHIN A BUILDING SHALL:
   A. BE INSTALLED IN THE SHORTEST AND STRAIGHTEST POSSIBLE RUN.
   B. HAVE NO SECTION LONGER THAN 100-FEET NOR CONTAIN MORE THAN TWO 90-DEGREE BENDS. AN APPROVED SIZED JUNCTION BOX OR GUTTER BOX SHALL BE PLACED IF THIS IS EXCEEDED.
   C. ALL BENDS SHALL BE LONG SWEEP-RADIUS BENDS BUT THE INSIDE RADIUS OF THE BEND MUST NEVER BE LESS THAN TEN TIMES THE DIAMETER OF THE CONDUIT.

48. ALL CONSTRUCTION MUST BE INSPECTED AND APPROVED BY SPECTRUM PRIOR TO THE INSTALLATION OF ANY OF ITS FACILITIES AND THE ENERGIZING OF ITS SYSTEM.

49. CONTRACTOR AND/OR CUSTOMER SHALL PROVIDE SPECTRUM WITH SUFFICIENT INSTALLATION TIME IN THEIR OCCUPANCY TIME TABLE.

50. FOR PULLBOX LOCATIONS WHERE VEHICULAR INTRUSION POSSIBLE, CONCRETE COLLAR REQUIRED PER SPECTRUM STANDARD AND SPECIFICATIONS MANUAL. EXAMPLES INCLUDE BUT NOT LIMITED TO, ROLLED CURBS, CURB/HEADERS LESS THAN 5" IN HEIGHT, VEHICULAR TRAVELWAYS WITH NO DEFINED CURB/HEADER, ETC.

   A. NON-SIDEWALK AREA, SEE FIGURE 18.1c, 19.1c AND 20.1b IN THE SPECTRUM SPECIFICATIONS MANUAL.

APPROVED BY:

KAUA'I ISLAND UTILITY COOPERATIVE — DATE

HAWAIIAN TELCOM — DATE

SPECTRUM — DATE

JENSON J. SANTOS
LICENSED PROFESSIONAL ENGINEER
No. 14286-E
HAWAII, U.S.A.

This work was prepared by me or under my supervision and construction of this project will be under my observation. (Observation of construction as defined in Chapter 16-115, Subchapter 1 Definitions of the Hawaii Administrative Rules, Professional Engineers, Architects, Surveyors, and Landscape Architects)

signature — 4/30/24 expiration date of the license

NOTE: Contractor to check and verify dimensions at job before proceeding with work.

REVISION	DATE	DESCRIPTION	MADE BY	APPROVED

PROJECT:
DEPARTMENT OF HAWAIIAN HOME LANDS
SITE AND INFRASTRUCTURE IMPROVEMENTS
FOR HANAPĒPĒ RESIDENTIAL LOTS, PHASE 2
TMK: (4) 1-8-007: 003 (PORTION) & (4) 2-8-007: 001 TO 050 (PORTION)
Hanapēpē, Waimea, Kaua'i, Hawai'i

CATV NOTES

THIS DOCUMENT CONTAINS INFORMATION PROPRIETARY TO SSFM INTERNATIONAL, INC., AND IS FURNISHED IN CONFIDENCE FOR THE LIMITED PURPOSE OF EVALUATION, BIDDING OR REVIEW. THIS DOCUMENT OR ITS CONTENTS MAY NOT BE USED FOR ANY OTHER PURPOSE AND MAY NOT BE REPRODUCED OR DISCLOSED TO OTHERS WITHOUT THE PRIOR WRITTEN CONSENT OF SSFM INTERNATIONAL, INC.

DATE
NOVEMBER 2022

SHEET NUMBER
E-104

2022-11-07 8:35 AM Z:\Acad\PROJECTS\218171B\E104_78_218171B_CATV Notes

SANDWICH ISLES COMMUNICATIONS CONSTRUCTION NOTES

(REVISED 01/17/19)

GENERAL:

1. ALL WORK SHALL BE IN STRICT ACCORDANCE WITH SPECIFICATIONS AND REQUIREMENTS OF THE RURAL UTILITIES SERVICES (RUS) AND SANDWICH ISLES COMMUNICATIONS (SIC), WHICH COMPLIES WITH ALL APPLICABLE CITY, COUNTY, STATE AND FEDERAL REQUIREMENTS.
2. ALL MATERIALS USED MUST BE APPROVED AND/OR ACCEPTED BY SANDWICH ISLES COMMUNICATIONS, INC.
3. CONTRACTOR MAY REFER TO THE RUS WEBSITE FOR REGULATIONS, BULLETINS, FORMS, ETC. (HTTPS://WWW.RD.USDA.GOV/PUBLICATIONS/REGULATIONS-GUIDELINES)
4. CONTACT THE HAWAII ONE CALL CENTER AT (866) 423-7287 FOR LOCATING EXISTING UNDERGROUND FACILITIES PRIOR TO BEGINNING ANY EXCAVATION.
5. THE CONTRACTOR SHALL PROCURE AND PAY FOR ALL LICENSES AND PERMITS AND SHALL GIVE ALL NOTICES NECESSARY FOR PROSECUTION OF THE WORK.
6. IT IS THE RESPONSIBILITY OF THE CONTRACTOR TO COORDINATE WORK SCHEDULES WITH ALL UTILITY COMPANIES, COUNTY, OR STATE AGENCIES REQUIRED FOR THIS PROJECT. THIS IS TO INCLUDE COORDINATION OF ANY INSPECTION AND SPECIFICATIONS BY THOSE UTILITY COMPANIES, COUNTY, OR STATE AGENCIES.
7. THE CONTRACTOR SHALL VERIFY ALL CONDITIONS AND DIMENSIONS RELATING TO THIS PROJECT BEFORE COMMENCING THE REQUIRED WORK.
8. THE CONTRACTOR SHALL PROMPTLY NOTIFY THE ENGINEER OF ANY DISCREPANCIES AND/OR CONDITIONS WHICH WOULD PREVENT HIM FROM FULFILLING THE TERMS OF THIS CONTRACT.
9. ALL SIC PULLBOXES THAT THE CONTRACTOR ENTERS FOR INSTALLATION OF FACILITIES MUST BE CLEARED OF STANDING WATER AND DEBRIS. CONTRACTOR SHALL ORGANIZE EXISTING CABLE FACILITIES, TO INCLUDE ADDING CABLE RACKS AND TYING DOWN EXISTING CABLE, IN ORDER TO ACCOMMODATE NEW FACILITIES BEING PLACED. CLEANING AND ORGANIZING OF PULLBOXES SHALL BE DONE TO THE SATISFACTION OF THE PROJECT MANAGER.
10. THE CONTRACTOR SHALL SUBMIT AS-BUILT DRAWINGS TO THE OWNER AT COMPLETION OF THE PROJECT. AS-BUILT DRAWINGS REFER TO DOCUMENTS MAINTAINED AND ANNOTATED BY THE CONTRACTOR DURING CONSTRUCTION AND INCLUDE ANY CHANGES OR NEW INFORMATION FOUND OR ADDED THROUGHOUT CONSTRUCTION OF THE PROJECT.

CONDUITS:

1. ALL UNDERGROUND PVC CONDUITS, SWEEPS, COUPLINGS, ADAPTERS AND BELL ENDS SHALL BE SCHEDULE 40, UNLESS OTHERWISE SPECIFIED.
2. ALL HIGH DENSITY POLYETHYLENE CONDUITS SHALL BE SDR 11. TYPICAL 3-PACK UNIT INCLUDES THREE 1.5-INCH SDR 11 RATED CONDUITS IN THE COLORS OF BLACK, RED, AND ORANGE, UNLESS OTHERWISE SPECIFIED. ALL CONDUITS TO BE PRESSURE TESTED AT 120 PSI FOR TWO MINUTES EACH. FUSION SPLICING OF THE CONDUIT SHALL BE ACCEPTABLE ONLY WHEN PULLING JOINTS THROUGH BORES. ALL COUPLINGS SHALL BE DOUBLE "E-LOC" MANUFACTURED BY ETOC SPECIALTY PRODUCTS, INC.
3. MAIN CONDUIT RUNS, EXCEPT RISER CONDUITS, SHALL BE CONSTRUCTED WITH MINIMUM 6-FOOT RADIUS CURVES, UNLESS OTHERWISE APPROVED BY THE PROJECT MANAGER.
4. AFTER THE CONDUITS ARE INSTALLED, A ROUND SOLID MANDREL NOT LESS THAN 12-INCHES IN LENGTH AND HAVING A DIAMETER OF 1/4-INCH LESS THAN THE INSIDE DIAMETER OF THE CONDUIT SHALL BE PULLED THROUGH EACH CONDUIT. THE SIC PROJECT MANAGER SHALL BE PRESENT DURING ALL MANDREL TESTING. SUFFIXES LISTED IN RUS 515B FOR CONDUITS ARE APPLICABLE.
5. INSTALL MULETAPE IN ALL PVC CONDUITS TWO (2) INCH DIAMETER AND LARGER. THE NEPTCO MULETAPE (OR APPROVED EQUAL) IS AVAILABLE IN 3,000FT., 6,500FT., AND 10,000FT. REELS FROM WESTINGHOUSE ELECTRIC SUPPLY COMPANY (WESCO), THE NEPTCO MULETAPE IS PRE-LUBRICATED AND PRINTED WITH SEQUENTIAL FOOTAGE MARKINGS. PVC CONDUITS WITH A DIAMETER OF 1.5-INCH OR LESS SHALL HAVE A POLY-LINE (P-LINE) INSTALLED. ALL DUCTS SHALL BE SEALED AFTER MULETAPE/P-LINE HAS BEEN INSTALLED, FOLLOWING THE SPECIFICATIONS BELOW.
6. ALL CONDUITS AND DUCTS SHALL BE PROPERLY SEALED USING COMMSCOPE, JACKMOON DUCT SEALS, APPLICABLE BUSHING SLEEVES AND BLANK DUCT PLUGS. THE CONDUIT DIAMETER, INSIDE DIAMETER AND CABLE SIZE(S) SHALL BE TAKEN INTO CONSIDERATION WHEN ORDERING AND INSTALLING JACKMOON DUCT SEALS.

   COMMSCOPE JACKMOON SEALS SHALL BE:

2-INCH CONDUIT:	TRIPLEX DUCT SEALS, SERIES 70
3-INCH CONDUIT:	TRIPLEX DUCT SEALS, SERIES 136
3.5-INCH AND LARGER CONDUIT:	QUADPLEX DUCT SEALS, SERIES 136

   ALL OTHER DUCTS SHALL HAVE COMMSCOPE, BLANK JACKMOON PLUGS TO KEEP THEM FREE OF WATER AND DEBRIS.
7. CONDUIT STUBS FROM HANDHOLES TO INDIVIDUAL RESIDENTIAL LOTS SHALL BE SCHEDULE 40 PVC, 1-INCH DIAMETER AND EXTENDED 5-FEET BEYOND PROPERTY LINE. CAP AND SEAL END AND MARK LOCATIONS WITH ABOVE GROUND MARKER.
8. ALL CONDUITS SHALL ENTER MANHOLES AT A 90 DEGREE ANGLE AND SHALL EXTEND INTO THE MANHOLE AS FOLLOWS: CONDUITS DESIGNATED FOR FIBER SHALL EXTEND 12-INCHES INTO THE MANHOLE. ALL OTHER CONDUITS SHALL BE FLUSH WITH THE INSIDE WALL AND INCLUDE BELL ENDS. ANY EXCEPTIONS SHALL ONLY BE PERMITTED WHEN SPECIFIED BY THE PROJECT MANAGER.
9. ALL CONDUITS ENTERING MANHOLES OR HANDHOLES SHALL BE GROUTED BETWEEN THE CONDUITS AND SIDEWALL, INSIDE AND OUT. ALL CONDUITS WILL ENTER THE MANHOLES AND HANDHOLES ON THE PROPERTY SIDE AT ALL TIMES UNLESS OTHERWISE SPECIFIED BY THE PROJECT MANAGER.
10. BACKFILL AND COMPACTION FOR DUCTLINE TRENCHES, MANHOLES AND HANDHOLES, SHALL BE IN ACCORDANCE WITH:
    - A. STATE HIGHWAY DEPARTMENT'S STANDARD SPECIFICATIONS FOR ROAD AND BRIDGE CONSTRUCTION WITH LATEST AMENDMENTS, IF CONSTRUCTION IS LOCATED UNDER A STATE STREET OR ROAD, OR LOCATED IN PRIVATE PROPERTY.
    - B. THE STANDARD SPECIFICATIONS FOR ROAD, BRIDGE AND PUBLIC WORKS CONSTRUCTION, DATED 1994, OF THE DEPARTMENT OF PUBLIC WORKS, CITY AND COUNTY OF HONOLULU, WITH LATEST AMENDMENTS; COUNTY OF KAUAI, MAUI, OR HAWAII, AS THE CASE MAY BE, IF CONSTRUCTION IS LOCATED UNDER COUNTY STREETS AND ROADS.
11. BACKFILLING SHALL BE SUBJECT TO THE APPROVAL OF THE SIC PROJECT MANAGER, THE AUTHORIZED REPRESENTATIVE OF THE DEPARTMENT OF TRANSPORTATION, STATE OF HAWAII AND/OR DEPARTMENT OF PUBLIC WORKS, CITY AND COUNTY OF HONOLULU, COUNTY OF KAUAI, MAUI OR HAWAII, AS THE CASE MAY BE.
12. A THIRD PARTY GEOTECHNICAL ENGINEER, LICENSED AND INSURED IN THE STATE OF HAWAI1, MUST CERTIFY THAT THE EXCAVATED AREA MEETS THE GOVERNING AGENCIES AND/OR OWNERS STANDARDS FOR BACKFILL AND COMPACTION.
13. EXCAVATED MATERIAL MAY BE REUSED AS BACKFILL, PROVIDING THAT IT CONFORMS TO REQUIREMENTS OF TYPE "A" AND TYPE "B" BACKFILL, AS REQUIRED WITHIN THE STANDARD SPECIFICATIONS. A WRITTEN SOILS REPORT OF CONFORMANCE BY A LICENSED THIRD PARTY GEOTECHNICAL ENGINEER IS NEEDED PRIOR TO BACKFILL USING THE EXCAVATED MATERIAL.
    - A. TYPE A BACKFILL IS DEFINED AS BEACH SAND, EARTH OR EARTH AND GRAVEL. MAXIMUM PARTICLE SIZE SHALL BE 1-INCH AND MIXTURE SHALL NOT CONTAIN MORE THAN 20% BY VOLUME OF ROCK PARTICLES.
    - B. TYPE B BACKFILL IS DEFINED AS BEACH SAND, EARTH OR EARTH AND GRAVEL. MAXIMUM PARTICLE SIZE SHALL BE 1/2-INCH AND MIXTURE SHALL NOT CONTAIN MORE THAN 20% BY VOLUME OF ROCK PARTICLES.
14. ALL CONDUIT RUNS SHALL HAVE A 3-INCH NON-METALLIC WARNING TAPE PLACED 12-INCHES ABOVE THE CONDUIT RUN. THE TAPE SHALL READ "CAUTION BURIED FIBER OPTIC CABLE BELOW".

MANHOLES AND HANDHOLES:

1. ALL MANHOLES SHALL HAVE HS20-44 TRAFFIC LOADING COVERS (UNLESS OTHERWISE NOTED). HANDHOLES SHALL HAVE 20K TRAFFIC LOAD RATED COVERS.
2. ALL MANHOLE AND HANDHOLE COVERS SHALL HAVE COVER LOGO TO READ "SIC".
3. ALL MANHOLE AND HANDHOLE COVER BOLTS SHALL BE STAINLESS STEEL 3/4-INCH PENTAHEAD, UNLESS OTHERWISE NOTED.
4. ALL MANHOLES AND HANDHOLES ARE SPECIFIED AS FOLLOWS:
   - A. UM35 AND UM46 MANHOLE – CONSISTS OF A REINFORCED CONCRETE MANHOLE WITH CAST IRON LID AND RISERS (IF REQUIRED). ALL MANHOLES ARE UNDER MASTER PURCHASE AGREEMENT WITH HAWAII PRECAST, INC. LOCATED IN CAPTAIN COOK, HAWAI1 (808-326-7730).
   - B. UH35 AND UH46 HANDHOLE – CONSISTS OF A REINFORCED CONCRETE HANDHOLE WITH TRAFFIC RATED HINGED COVERS (UH35) OR SIX TRAFFIC RATED SLIP-NOT COVERS (UH46) AND RISERS (IF REQUIRED). ALL HANDHOLES ARE UNDER MASTER PURCHASE AGREEMENT WITH HAWAII PRECAST, INC. LOCATED IN CAPTAIN COOK, HAWAI1 (808-326-7730).
   - C. UHC30X48X33 HANDHOLE (PULLBOX) – CONSISTS OF A TWO-TIER ARMORCAST POLYMER CONCRETE BOX & COVER ASSEMBLY. PART NUMBER (A6001430TA-SIC4).
   - D. UHC13X24X30 HANDHOLE (PULLBOX) – CONSISTS OF AN ARMORCAST POLYMER CONCRETE BOX & COVER ASSEMBLY. PART NUMBER (A6001946TA-SIC1).
5. ALL MANHOLES AND HANDHOLES TO BE ORDERED WITH ALL HARDWARE, INCLUDING CABLE RACKS, STEPS AND LOCKS.
6. SET MANHOLE OR HANDHOLE ON A LEVEL AREA, IN THE BOTTOM OF THE EXCAVATION, ON A 4-INCH LAYER OF CRUSHED ROCK, FOR DRAINAGE PURPOSES.
7. THE BASE OF ALL MANHOLES AND HANDHOLES WILL BE PLACED LEVEL. SOME MANHOLES HAVE ADJUSTABLE FRAMES. ALL VOIDS CREATED DURING INSTALLATION MUST BE FILLED WITH MORTAR MIX OR CONCRETE. THIS IS ESPECIALLY TRUE FOR MANHOLES AND HANDHOLES SET IN ROADWAYS.
8. BEFORE BACKFILLING AND COMPACTING, MAKE SURE COVERS ARE IN PLACE AND SECURE. LAYER 6-INCHES TO 8-INCHES OF BACKFILL MATERIAL AROUND THE MANHOLE OR HANDHOLE. TAMP EACH INDIVIDUAL LAYER OF BACKFILL MATERIAL. CONTINUE THE LAYERING AND "TAMPING" UNTIL FINAL GRADE IS ACHIEVED.
9. THE TOPS OF ALL MANHOLES AND HANDHOLES SHALL BE FLUSH TO GRADE IN PAVED AREAS OR 1-INCH ABOVE FINISH GRADE IN NON-PAVED AREAS, UNLESS OTHERWISE SPECIFIED BY PROJECT MANAGER.
10. PROVIDE A 5/8-INCH DIAMETER X 8-FOOT COPPER CLAD GROUND ROD AT HANDHOLES AND MANHOLES AS SPECIFIED ON THE DRAWINGS OR AS DIRECTED BY THE PROJECT MANAGER.
11. FIELD MODIFICATIONS ARE ACCOMPLISHED BY USING A FINE TOOTHED SAW. RACKS OR OTHER EQUIPMENT MAY BE SECURED TO THE SIDE OF THE VAULT BY USE OF TOGGLE BOLTS, MOLLY BOLTS, ETC. AND MUST BE APPROVED BY THE PROJECT MANAGER.

UTILITY POLE INSTALLATION:

1. ALL AERIAL WORK SHALL BE IN STRICT ACCORDANCE WITH SPECIFICATIONS AND REQUIREMENTS OF THE RURAL UTILITIES SERVICES (RUS) BULLETIN 1753F-152.
2. UTILITY POLES SHALL BE PRESERVED UTILIZING THE PENTACHLOROPHENOL (PENTA) TYPE TREATMENT.
3. UTILITY POLES SHALL BE TERMITE PROTECTED UTILIZING TERMIMESH POLESOCK'S OR EQUIVALENT. POLESOCK'S SHALL EXTEND NO MORE THAN EIGHT INCHES ABOVE GROUND AND BE SECURED WITH STAINLESS STRAPPING. FOLLOW THE MANUFACTURER'S RECOMMENDATIONS FOR INSTALLATION.
4. THE POLE HOLE SHALL BE OF SUFFICIENT DIAMETER TO PERMIT THE POLE TO SETTLE FREELY TO THE BOTTOM OF THE HOLE WITHOUT TRIMMING THE BUTT AND STILL HAVE SUFFICIENT SPACE BETWEEN THE POLE AND THE SIDE OF THE HOLE TO PERMIT PROPER TAMPING OF THE BACKFILL AT EVERY POINT AROUND THE POLE, AND THROUGHOUT THE ENTIRE DEPTH OF THE HOLE.
5. THE POLE HOLE SHALL NOT EXCEED TWO TIMES THE DIAMETER OF THE POLES BUTT DIAMETER.
6. BACKFILL SHALL BE THOROUGHLY TAMPED THE FULL DEPTH OF THE POLE HOLE. EARTH MUST BE BANKED AROUND THE POLE TO A MINIMUM HEIGHT OF SIX INCHES ABOVE GROUND LEVEL.
7. POLES SHALL BE SET PLUMB EXCEPT AT CORNERS WHERE THEY SHALL BE SET AND RAKED AGAINST THE LOAD SO THAT THE POLE TOP WILL BE IN LINE AFTER THE LOAD IS APPLIED. THE RAKE POLE SHALL NOT EXCEED SIX INCHES FOR EACH TEN FEET OF POLE LENGTH AFTER THE CONDUCTORS ARE INSTALLED AT THE REQUIRED TENSION. DEADEND SHALL BE SET SO AS TO BE PLUMB AND IN LINE AFTER THE LOAD IS APPLIED.
8. POLE LIGHTNING PROTECTION SHALL BE A #6 AWG BARE COPPER WIRE IN ACCORDANCE WITH SIC/RUS CONSTRUCTION PRACTICES.
9. SUSPENSION STRAND / HARDWARE SHALL BE CLASS C GALVANIZED STEEL UTILITY GRADE FOR CORROSION AREAS.
10. GUY GUARDS, YELLOW IN COLOR SHALL BE PLACED ON ALL DOWN GUYS.

APPROVED BY:

KAUA'I ISLAND UTILITY COOPERATIVE DATE

HAWAIIAN TELCOM DATE

SPECTRUM DATE

JENSON J. SANTOS
LICENSED PROFESSIONAL ENGINEER
No. 14286-E
HAWAII, U.S.A.

This work was prepared by me or under my supervision and construction of this project will be under my observation. (Observation of construction as defined in Chapter 16-115, Subchapter 1 Definitions of the Hawaii Administrative Rules, Professional Engineers, Architects, Surveyors, and Landscape Architects)

signature 4/30/24 expiration date of the license

NOTE: Contractor to check and verify dimensions at job before proceeding with work.

REVISION	DATE	DESCRIPTION	MADE BY	APPROVED

PROJECT:
DEPARTMENT OF HAWAIIAN HOME LANDS
SITE AND INFRASTRUCTURE IMPROVEMENTS
FOR HANAPĒPĒ RESIDENTIAL LOTS, PHASE 2
TMK: (4) 1-8-007: 003 (PORTION) & (4) 2-8-007: 001 TO 050 (PORTION)
Hanapēpē, Waimea, Kaua'i, Hawai'i

SANDWICH ISLES COMMUNICATIONS
CONSTRUCTION NOTES

THIS DOCUMENT CONTAINS INFORMATION PROPRIETARY TO SSFM INTERNATIONAL, INC., AND IS FURNISHED IN CONFIDENCE FOR THE LIMITED PURPOSE OF EVALUATION, BIDDING OR REVIEW. THIS DOCUMENT OR ITS CONTENTS MAY NOT BE USED FOR ANY OTHER PURPOSE AND MAY NOT BE REPRODUCED OR DISCLOSED TO OTHERS WITHOUT THE PRIOR WRITTEN CONSENT OF SSFM INTERNATIONAL, INC.

DATE
NOVEMBER 2022

SHEET NUMBER
E-105

2022-11-07 8:36 AM Z:\Acad\PROJECTS\218171B\E105_79_218171B_SIC Notes

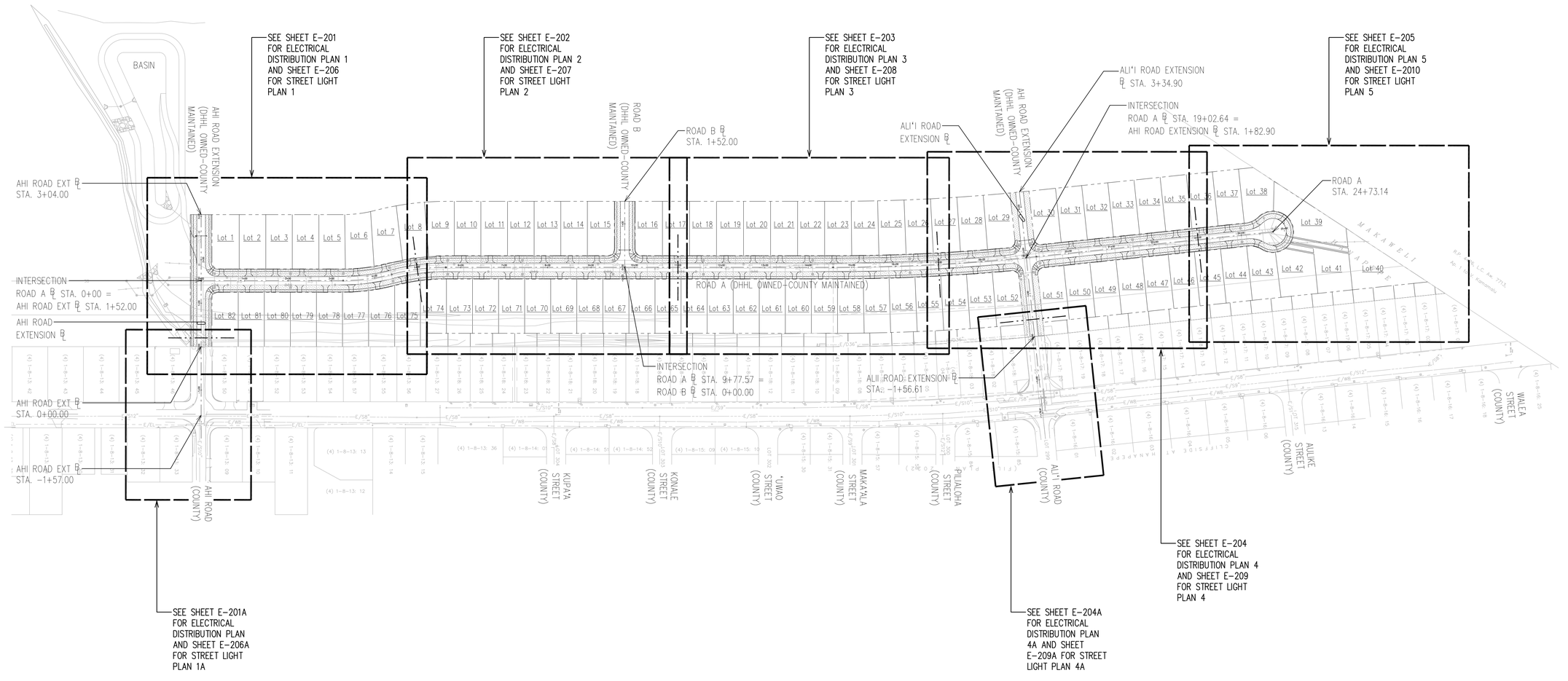

NORTH

OVERALL SITE PLAN

SCALE: 1"=120'

120' 60' 0 120' 240' 360'

SCALE: 1"=120'

GRAPHIC SCALE

JENSON J. SANTOS
LICENSED PROFESSIONAL ENGINEER
No. 14286-E
HAWAII, U.S.A.

This work was prepared by me or under my supervision and construction of this project will be under my direction. Observation of construction as defined in Chapter 14-15, Subsection 3, Rules, Professional Engineers, Architects, Surveyors, and Landscape Architects.

Signature: 4/30/24
expiration date of the license

NOTE: Contractor to check and verify dimensions at job before proceeding with work.

REVISION	DATE	DESCRIPTION	MADE BY	APPROVED

PROJECT:
DEPARTMENT OF HAWAIIAN HOME LANDS
SITE AND INFRASTRUCTURE IMPROVEMENTS
FOR HANAPĒPĒ RESIDENTIAL LOTS, PHASE 2
TMK: (4) 1-8-007: 003 (PORTION) & (4) 2-8-007: 001 TO 050 (PORTION)
Hanapēpē, Waimea, Kaua'i, Hawai'i

OVERALL SITE PLAN

THIS DOCUMENT CONTAINS INFORMATION PROPRIETARY TO SSFM INTERNATIONAL, INC., AND IS FURNISHED IN CONFIDENCE FOR THE LIMITED PURPOSE OF EVALUATION, BIDDING OR REVIEW. THIS DOCUMENT OR ITS CONTENTS MAY NOT BE USED FOR ANY OTHER PURPOSE AND MAY NOT BE REPRODUCED OR DISCLOSED TO OTHERS WITHOUT THE PRIOR WRITTEN CONSENT OF SSFM INTERNATIONAL, INC.

DATE
NOVEMBER 2022

SHEET NUMBER
E-200

2022-11-07 8:36 AM Z:\Acad\PROJECTS\21817IB\E200_80_21817IB_Site Plan

NOTES:

1. PROVIDE SELECT GRANULAR BEDDING BENEATH HANDHOLES SHALL BE PLACED IN RELATIVELY UNIFORM LIFTS NO GREATER THAN EIGHT (8) INCHES IN LOOSE THICKNESS, MOISTURE CONDITIONED TO OPTIMUM MOISTURE CONTENT, AND UNIFORMLY COMPACTED TO AT LEAST NINETY (90) PERCENT OF THE MAXIMUM DRY DENSITY (ASTM D1557-02). CONTRACTOR TO SCHEDULE WITH OWNER'S GEOTECHNICAL INSPECTOR FOR COMPACTION AND BEDDING INSTALLATION. PULLBOX/HANDHOLES TO BE INSTALLED FLUSH WITH WALKWAY.
2. PROVIDE MINIMUM 12" HORIZONTAL CLEARANCE BETWEEN DUCTLINE, PULLBOXES, HANDHOLES, MANHOLES, AND OTHER ELECTRICAL STRUCTURES AND ALL DRAIN STRUCTURES.
3. SEE SHEETS E-206 TO E-210 FOR STREET LIGHTING LAYOUT.
4. WHERE THERE ARE CONDUIT AND CONDUIT STUBOUTS NEAR THE WATER METER AND FIRE HYDRANT, OFFSET THE CONDUIT AND CONDUIT STUBOUT BY A MINIMUM OF 10' AWAY FROM THE WATER METER AND FIRE HYDRANT.

5 KIUC TRANSFORMER EASEMENT.

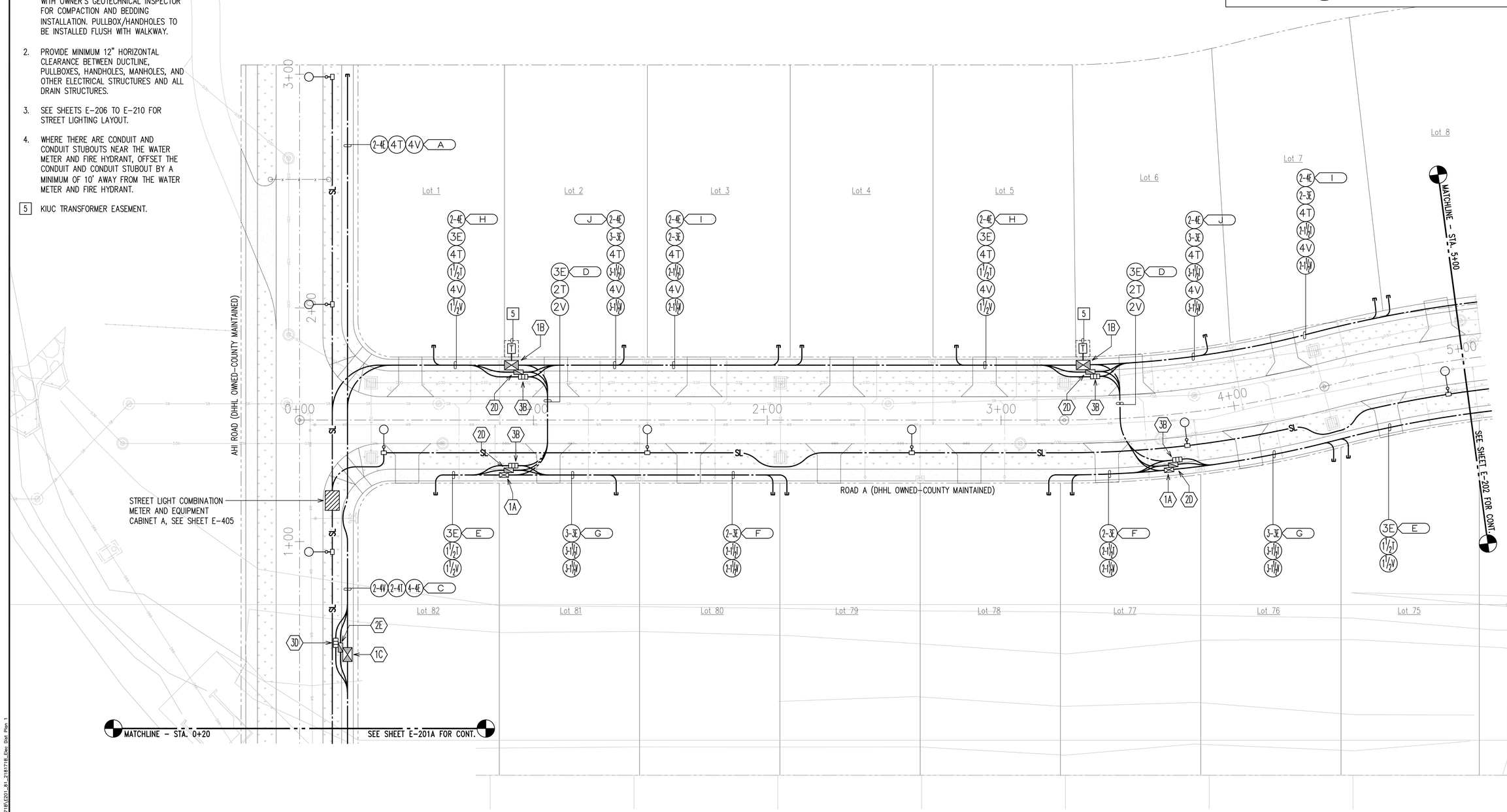

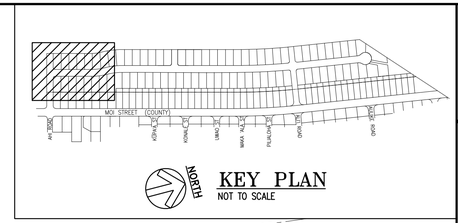

JENSON J. SANTOS
LICENSED PROFESSIONAL ENGINEER
No. 14286-E
HAWAII, U.S.A.

This work was prepared by me or under my supervision. Date of expiration: 04/30/24. Licensed Professional Engineer, Architect, Surveyor, and Landscape Architect, State of Hawaii.

4/30/24

NOTE: Contractor to check and verify dimensions at job before proceeding with work.

REVISION	DATE	DESCRIPTION	MADE BY	APPROVED

PROJECT:
DEPARTMENT OF HAWAIIAN HOME LANDS
SITE AND INFRASTRUCTURE IMPROVEMENTS
FOR HANAPĒPĒ RESIDENTIAL LOTS, PHASE 2
TMK: (4) 1-8-007: 003 (PORTION) & (4) 2-8-007: 001 TO 050 (PORTION)
Hanapēpē, Waimea, Kaua'i, Hawai'i

ELECTRICAL DISTRIBUTION PLAN 1

THIS DOCUMENT CONTAINS INFORMATION PROPRIETARY TO SSFM INTERNATIONAL, INC. AND IS FURNISHED IN CONFIDENCE FOR THE LIMITED PURPOSE OF EVALUATION, BIDDING OR REVIEW. THIS DOCUMENT OR ITS CONTENTS MAY NOT BE USED FOR ANY OTHER PURPOSE AND MAY NOT BE REPRODUCED OR DISCLOSED TO OTHERS WITHOUT THE PRIOR WRITTEN CONSENT OF SSFM INTERNATIONAL, INC.

DATE
NOVEMBER 2022

SHEET NUMBER
E-201

86 OF 109 SHEETS

NORTH
ELECTRICAL DISTRIBUTION PLAN 1
SCALE: 1"=20'

20' 10' 0 20' 40' 60'
SCALE: 1"=20'
GRAPHIC SCALE

2022-11-07 8:38 AM Z:\Acad\PROJECTS\21817\R\E201_81_21817\8_Elec Dist Plan 1

NOTES:

1. PROVIDE SELECT GRANULAR BEDDING BENEATH HANDHOLES SHALL BE PLACED IN RELATIVELY UNIFORM LIFTS NO GREATER THAN EIGHT (8) INCHES IN LOOSE THICKNESS, MOISTURE CONDITIONED TO OPTIMUM MOISTURE CONTENT, AND UNIFORMLY COMPACTED TO AT LEAST NINETY (90) PERCENT OF THE MAXIMUM DRY DENSITY (ASTM D1557-02). CONTRACTOR TO SCHEDULE WITH OWNER'S GEOTECHNICAL INSPECTOR FOR COMPACTION AND BEDDING INSTALLATION. PULLBOX/HANDHOLES TO BE INSTALLED FLUSH WITH WALKWAY.

2. PROVIDE MINIMUM 12" HORIZONTAL CLEARANCE BETWEEN DUCTLINE, PULLBOXES, HANDHOLES, MANHOLES, AND OTHER ELECTRICAL STRUCTURES AND ALL DRAIN STRUCTURES.

3. SEE SHEETS E-206 TO E-210 FOR STREET LIGHTING LAYOUT.

4. WHERE THERE ARE CONDUIT AND CONDUIT STUBOUTS NEAR THE WATER METER AND FIRE HYDRANT, OFFSET THE CONDUIT AND CONDUIT STUBOUT BY A MINIMUM OF 10' AWAY FROM THE WATER METER AND FIRE HYDRANT.

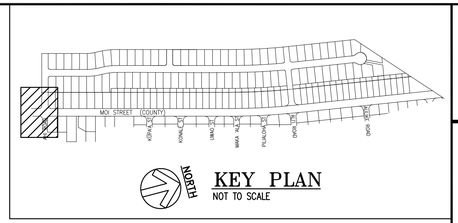

KEY PLAN
NOT TO SCALE

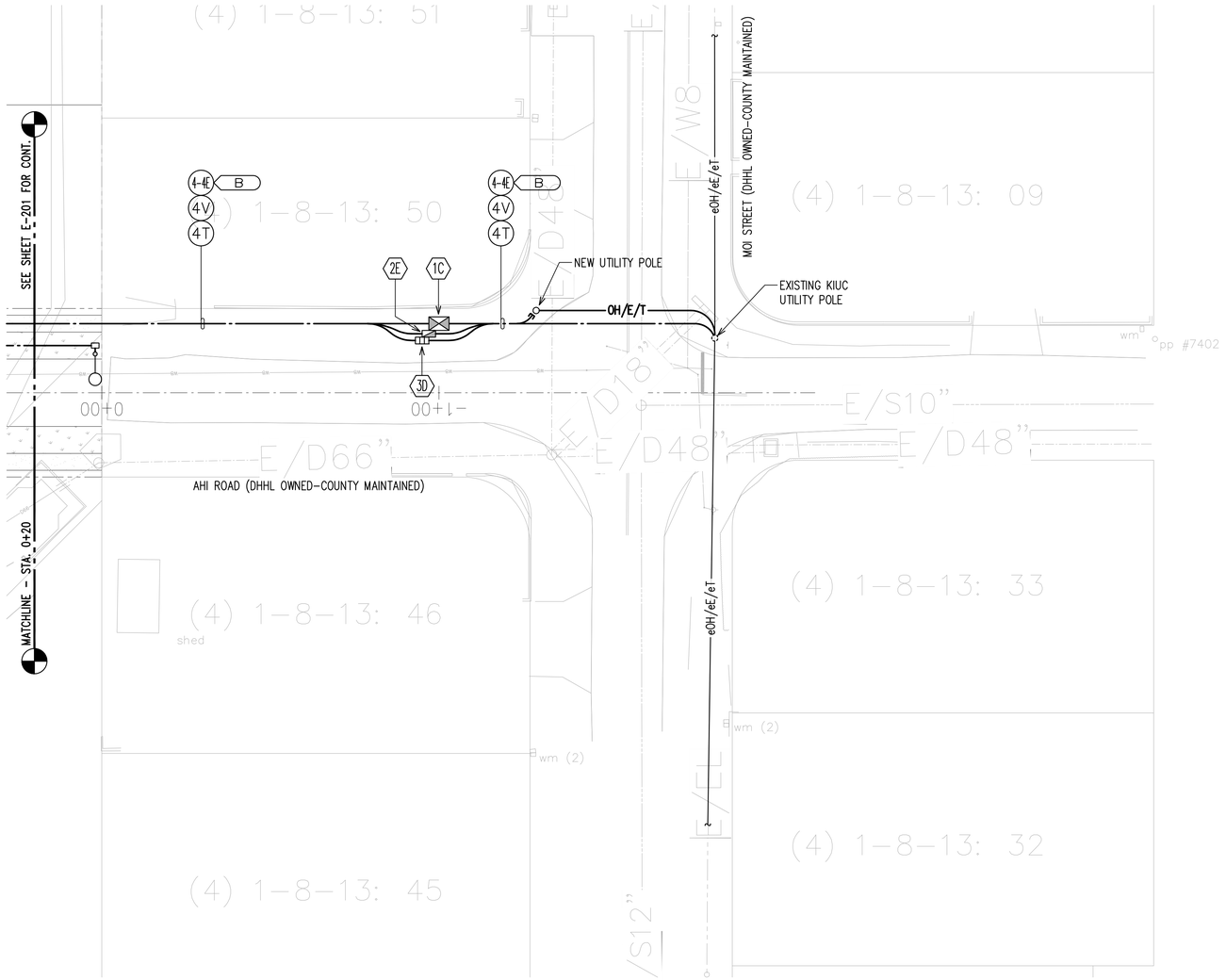

NORTH

ELECTRICAL DISTRIBUTION PLAN 1A
SCALE: 1"=20'

20' 10' 0 20' 40' 60'
SCALE: 1"=20'
GRAPHIC SCALE

JENSON J. SANTOS
LICENSED PROFESSIONAL ENGINEER
No. 14286-E
HAWAII, U.S.A.

This work was prepared by me or under my supervision and I accept responsibility for the professional content thereof. Signature of Professional Engineer, Architect, Surveyor, and Landscape Architect certifies compliance with applicable professional engineering, architecture, surveying, and landscape architecture laws of the State.

4/30/24

NOTE: Contractor to check and verify dimensions at job before proceeding with work.

REVISION	DATE	DESCRIPTION	MADE BY	APPROVED

PROJECT:
DEPARTMENT OF HAWAIIAN HOME LANDS
SITE AND INFRASTRUCTURE IMPROVEMENTS
FOR HANAPĒPĒ RESIDENTIAL LOTS, PHASE 2
TMK: (4) 1-8-007: 003 (PORTION) & (4) 2-8-007: 001 TO 050 (PORTION)
Hanapēpē, Waimea, Kaua'i, Hawai'i

ELECTRICAL DISTRIBUTION PLAN 1A

THIS DOCUMENT CONTAINS INFORMATION PROPRIETARY TO SSFM INTERNATIONAL, INC. AND IS FURNISHED IN CONFIDENCE FOR THE LIMITED PURPOSE OF EVALUATION, BIDDING OR REVIEW. THIS DOCUMENT OR ITS CONTENTS MAY NOT BE USED FOR ANY OTHER PURPOSE AND MAY NOT BE REPRODUCED OR DISCLOSED TO OTHERS WITHOUT THE PRIOR WRITTEN CONSENT OF SSFM INTERNATIONAL, INC.

DATE
NOVEMBER 2022

SHEET NUMBER
E-201A

87 OF 109 SHEETS

2022-11-07 8:39 AM Z:\Acad\PROJECTS\218171B\E201A_82_218171B_Elec Dist Plan 1A

NOTES:

1. PROVIDE SELECT GRANULAR BEDDING BENEATH HANDHOLES SHALL BE PLACED IN RELATIVELY UNIFORM LIFTS NO GREATER THAN EIGHT (8) INCHES IN LOOSE THICKNESS, MOISTURE CONDITIONED TO OPTIMUM MOISTURE CONTENT, AND UNIFORMLY COMPACTED TO AT LEAST NINETY (90) PERCENT OF THE MAXIMUM DRY DENSITY (ASTM D1557-02). CONTRACTOR TO SCHEDULE WITH OWNER'S GEOTECHNICAL INSPECTOR FOR COMPACTION AND BEDDING INSTALLATION. PULLBOX/HANDHOLES TO BE INSTALLED FLUSH WITH WALKWAY.
2. PROVIDE MINIMUM 12" HORIZONTAL CLEARANCE BETWEEN DUCTLINE, PULLBOXES, HANDHOLES, MANHOLES, AND OTHER ELECTRICAL STRUCTURES AND ALL DRAIN STRUCTURES.
3. SEE SHEETS E-206 TO E-210 FOR STREET LIGHTING LAYOUT.
4. WHERE THERE ARE CONDUIT AND CONDUIT STUBOUTS NEAR THE WATER METER AND FIRE HYDRANT, OFFSET THE CONDUIT AND CONDUIT STUBOUT BY A MINIMUM OF 10' AWAY FROM THE WATER METER AND FIRE HYDRANT.

[5] KIUC TRANSFORMER EASEMENT.

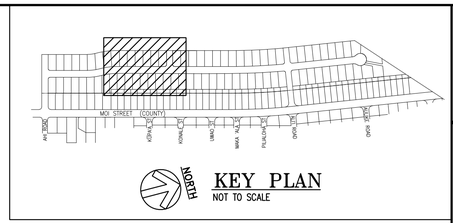

KEY PLAN
NOT TO SCALE

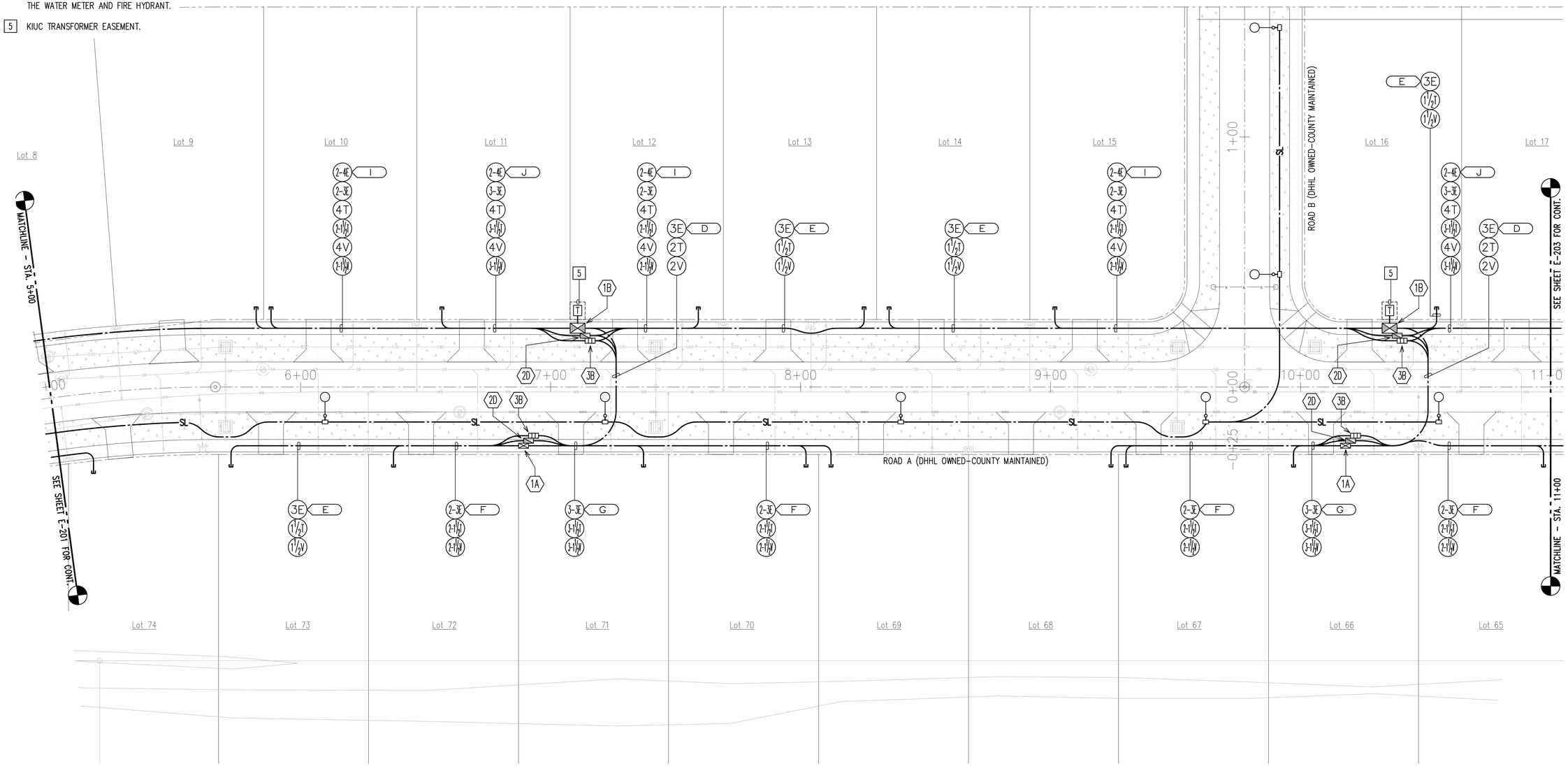

NORTH

ELECTRICAL DISTRIBUTION PLAN 2
SCALE: 1"=20'

20' 10' 0 20' 40' 60'
SCALE: 1"=20'
GRAPHIC SCALE

JENSON J. SANTOS
LICENSED PROFESSIONAL ENGINEER
No. 14286-E
HAWAII, U.S.A.

This work was prepared by me or under my supervision. Date of expiration of license: April 30, 2023. Licensed Professional Engineer, Architect, Surveyor, and Landscape Architect.

8/18/22

NOTE: Contractor to check and verify dimension at job before proceeding with work.

REVISION	DATE	DESCRIPTION	MADE BY	APPROVED

PROJECT:
SITE AND INFRASTRUCTURE IMPROVEMENTS
FOR HANAPĒPĒ RESIDENTIAL
SUBDIVISION, PHASE 2
TMK: (4) 1-8-007: 003 (PORTION) & (4) 2-8-007: 001 TO 050 (PORTION)
Hanapēpē, Waimea, Kaua'i, Hawai'i

ELECTRICAL DISTRIBUTION PLAN 2

THIS DOCUMENT CONTAINS INFORMATION PROPRIETARY TO SSFM INTERNATIONAL, INC., AND IS FURNISHED IN CONFIDENCE FOR THE LIMITED PURPOSE OF EVALUATION, BIDDING OR REVIEW. THIS DOCUMENT OR ITS CONTENTS MAY NOT BE USED FOR ANY OTHER PURPOSE AND MAY NOT BE REPRODUCED OR DISCLOSED TO OTHERS WITHOUT THE PRIOR WRITTEN CONSENT OF SSFM INTERNATIONAL, INC.

DATE
October 2022

SHEET NUMBER
E-202
88 OF 106 SHEETS

2022-11-07 8:39 AM Z:\Acad\PROJECTS\218718\E202_83_218718_Elec Dist Plan 2

NOTES:

1. PROVIDE SELECT GRANULAR BEDDING BENEATH HANDHOLES SHALL BE PLACED IN RELATIVELY UNIFORM LIFTS NO GREATER THAN EIGHT (8) INCHES IN LOOSE THICKNESS, MOISTURE CONDITIONED TO OPTIMUM MOISTURE CONTENT, AND UNIFORMLY COMPACTED TO AT LEAST NINETY (90) PERCENT OF THE MAXIMUM DRY DENSITY (ASTM D1557-02). CONTRACTOR TO SCHEDULE WITH OWNER'S GEOTECHNICAL INSPECTOR FOR COMPACTION AND BEDDING INSTALLATION. PULLBOX/HANDHOLES TO BE INSTALLED FLUSH WITH WALKWAY.
2. PROVIDE MINIMUM 12" HORIZONTAL CLEARANCE BETWEEN DUCTLINE, PULLBOXES, HANDHOLES, MANHOLES, AND OTHER ELECTRICAL STRUCTURES AND ALL DRAIN STRUCTURES.
3. SEE SHEETS E-206 TO E-210 FOR STREET LIGHTING LAYOUT.
4. WHERE THERE ARE CONDUIT AND CONDUIT STUBOUTS NEAR THE WATER METER AND FIRE HYDRANT, OFFSET THE CONDUIT AND CONDUIT STUBOUT BY A MINIMUM OF 10' AWAY FROM THE WATER METER AND FIRE HYDRANT.

5 KIUC TRANSFORMER EASEMENT.

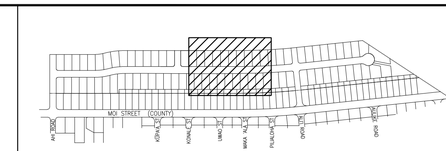

NORTH

KEY PLAN
NOT TO SCALE

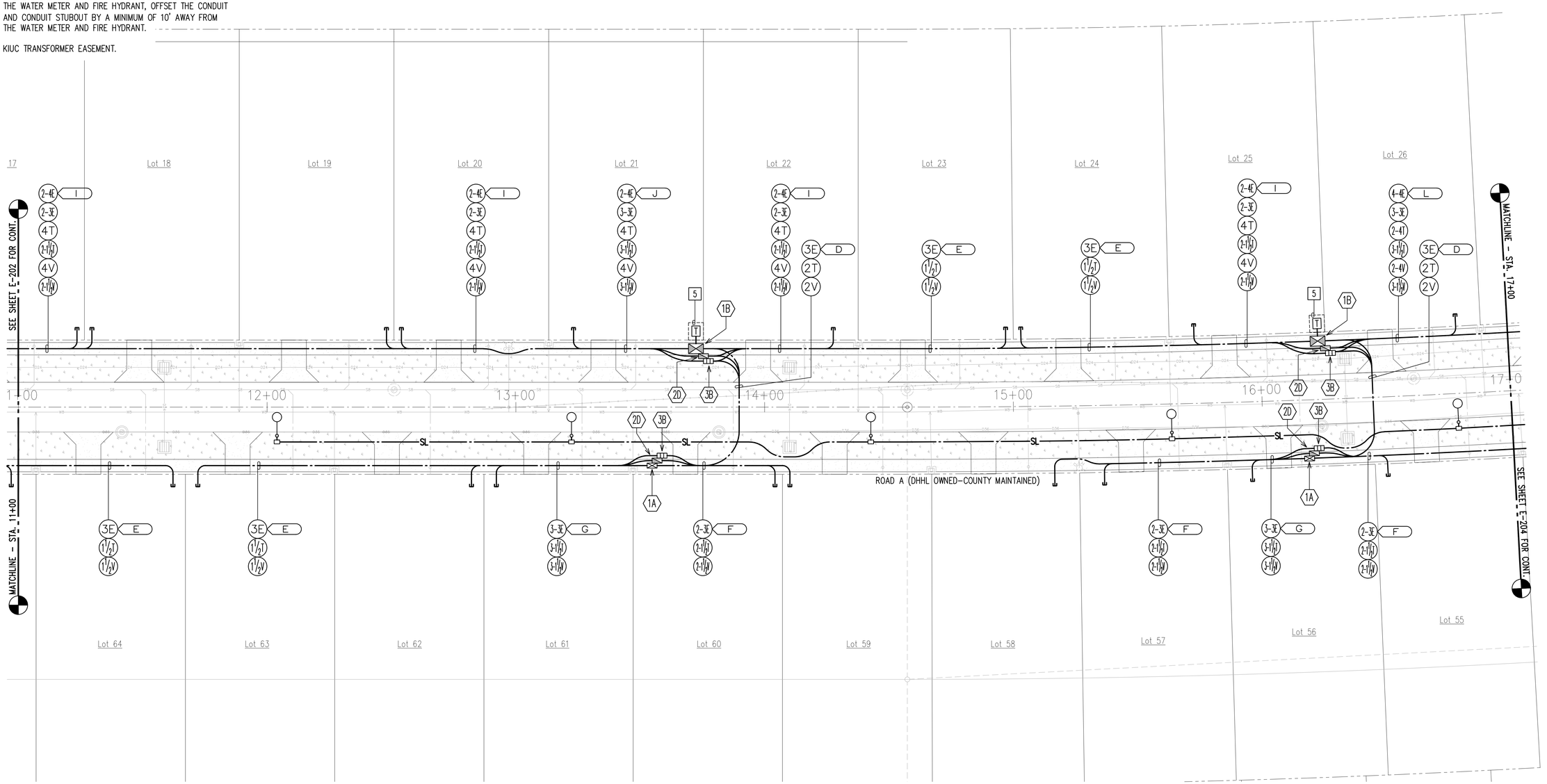

NORTH

ELECTRICAL DISTRIBUTION PLAN 3

SCALE: 1"=20'

20' 10' 0 20' 40' 60'

SCALE: 1"=20'

GRAPHIC SCALE

JENSON J. SANTOS
LICENSED PROFESSIONAL ENGINEER
No. 14286-E
HAWAII, U.S.A.

This work was prepared by me or under my supervision and contribution of this project will be under my observation. Observation of construction as defined in Chapter 16-115, Subsidiary Rules, Professional Engineers, Architects, Surveyors, and Landscape Architects.

Signature: 4/30/24
expiration date of the license

NOTE: Contractor to check and verify dimensions at job before proceeding with work.

REVISION	DATE	DESCRIPTION	MADE BY	APPROVED

PROJECT:
DEPARTMENT OF HAWAIIAN HOME LANDS
SITE AND INFRASTRUCTURE IMPROVEMENTS
FOR HANAPĒPĒ RESIDENTIAL LOTS, PHASE 2
TMK: (4) 1-8-007: 003 (PORTION) & (4) 2-8-007: 001 TO 050 (PORTION)
Hanapēpē, Waimea, Kaua'i, Hawai'i

ELECTRICAL DISTRIBUTION PLAN 3

THIS DOCUMENT CONTAINS INFORMATION PROPRIETARY TO SSFM INTERNATIONAL, INC. AND IS FURNISHED IN CONFIDENCE FOR THE LIMITED PURPOSE OF EVALUATION, BIDDING OR REVIEW. THIS DOCUMENT OR ITS CONTENTS MAY NOT BE USED FOR ANY OTHER PURPOSE AND MAY NOT BE REPRODUCED OR DISCLOSED TO OTHERS WITHOUT THE PRIOR WRITTEN CONSENT OF SSFM INTERNATIONAL, INC.

DATE
NOVEMBER 2022

SHEET NUMBER
E-203

2022-11-07 8:39 AM Z:\Acad\PROJECTS\2181718\E203_84_2181718_Elec Dist Plan 3

NOTES:

1. PROVIDE SELECT GRANULAR BEDDING BENEATH HANDHOLES SHALL BE PLACED IN RELATIVELY UNIFORM LIFTS NO GREATER THAN EIGHT (8) INCHES IN LOOSE THICKNESS, MOISTURE CONDITIONED TO OPTIMUM MOISTURE CONTENT, AND UNIFORMLY COMPACTED TO AT LEAST NINETY (90) PERCENT OF THE MAXIMUM DRY DENSITY (ASTM D1557-02). CONTRACTOR TO SCHEDULE WITH OWNER'S GEOTECHNICAL INSPECTOR FOR COMPACTION AND BEDDING INSTALLATION. PULLBOX/HANDHOLES TO BE INSTALLED FLUSH WITH WALKWAY.
2. PROVIDE MINIMUM 12" HORIZONTAL CLEARANCE BETWEEN DUCTLINE, PULLBOXES, HANDHOLES, MANHOLES, AND OTHER ELECTRICAL STRUCTURES AND ALL DRAIN STRUCTURES.
3. SEE SHEETS E-206 TO E-210 FOR STREET LIGHTING LAYOUT.
4. WHERE THERE ARE CONDUIT AND CONDUIT STUBOUTS NEAR THE WATER METER AND FIRE HYDRANT, OFFSET THE CONDUIT AND CONDUIT STUBOUT BY A MINIMUM OF 10' AWAY FROM THE WATER METER AND FIRE HYDRANT.

5 KIUC TRANSFORMER EASEMENT.

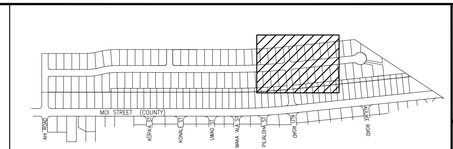

KEY PLAN
NOT TO SCALE

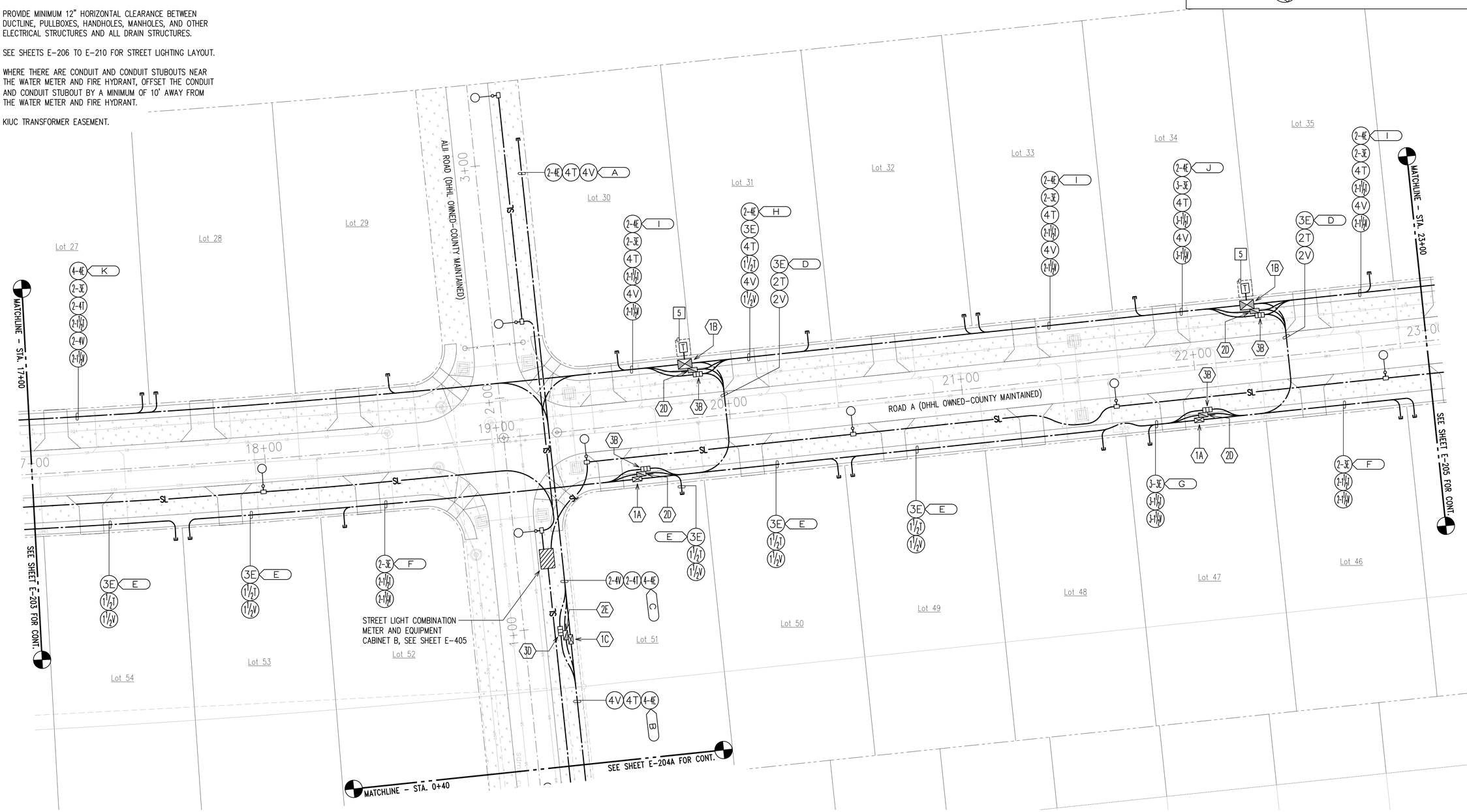

NORTH

ELECTRICAL DISTRIBUTION PLAN 4
SCALE: 1"=20'

20' 10' 0 20' 40' 60'
SCALE: 1"=20'
GRAPHIC SCALE

JENSON J. SANTOS
LICENSED PROFESSIONAL ENGINEER
No. 14286-E
HAWAII, U.S.A.

This work was prepared by me or under my supervision. Drawings, specifications, and other documents prepared by me or under my supervision are not to be used in whole or in part for any other project without my written permission. Licensed Professional Engineers, Architects, Surveyors, and Landscape Architects may not affix their seal to any document not prepared by them or under their direct supervision.

4/30/24
Date of Signature
Expiration Date of this License

NOTE: Contractor to check and verify dimensions at job before proceeding with work.

REVISION	DATE	DESCRIPTION	MADE BY	APPROVED

PROJECT:
DEPARTMENT OF HAWAIIAN HOME LANDS
SITE AND INFRASTRUCTURE IMPROVEMENTS
FOR HANAPĒPĒ RESIDENTIAL LOTS, PHASE 2
TMK: (4) 1-8-007: 003 (PORTION) & (4) 2-8-007: 001 TO 050 (PORTION)
Hanapēpē, Waimea, Kaua'i, Hawai'i

ELECTRICAL DISTRIBUTION PLAN 4

THIS DOCUMENT CONTAINS INFORMATION PROPRIETARY TO SSFM INTERNATIONAL, INC. AND IS FURNISHED IN CONFIDENCE FOR THE LIMITED PURPOSE OF EVALUATION, BIDDING OR REVIEW. THIS DOCUMENT OR ITS CONTENTS MAY NOT BE USED FOR ANY OTHER PURPOSE AND MAY NOT BE REPRODUCED OR DISCLOSED TO OTHERS WITHOUT THE PRIOR WRITTEN CONSENT OF SSFM INTERNATIONAL, INC.

DATE
NOVEMBER 2022

SHEET NUMBER
E-204

2022-11-07 8:40 AM Z:\Acad\PROJECTS\218171B\E204_ES_218171B_Elec Dist Plan 4

NOTES:

1. PROVIDE SELECT GRANULAR BEDDING BENEATH HANDHOLES SHALL BE PLACED IN RELATIVELY UNIFORM LIFTS NO GREATER THAN EIGHT (8) INCHES IN LOOSE THICKNESS, MOISTURE CONDITIONED TO OPTIMUM MOISTURE CONTENT, AND UNIFORMLY COMPACTED TO AT LEAST NINETY (90) PERCENT OF THE MAXIMUM DRY DENSITY (ASTM D1557-02). CONTRACTOR TO SCHEDULE WITH OWNER'S GEOTECHNICAL INSPECTOR FOR COMPACTION AND BEDDING INSTALLATION. PULLBOX/HANDHOLES TO BE INSTALLED FLUSH WITH WALKWAY.

2. PROVIDE MINIMUM 12" HORIZONTAL CLEARANCE BETWEEN DUCTLINE, PULLBOXES, HANDHOLES, MANHOLES, AND OTHER ELECTRICAL STRUCTURES AND ALL DRAIN STRUCTURES.

3. SEE SHEETS E-206 TO E-210 FOR STREET LIGHTING LAYOUT.

4. WHERE THERE ARE CONDUIT AND CONDUIT STUBOUTS NEAR THE WATER METER AND FIRE HYDRANT, OFFSET THE CONDUIT AND CONDUIT STUBOUT BY A MINIMUM OF 10' AWAY FROM THE WATER METER AND FIRE HYDRANT.

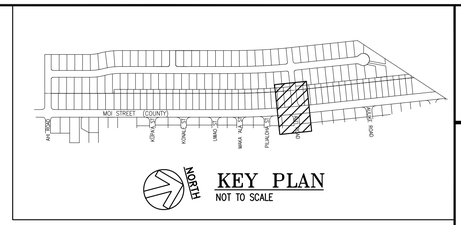

KEY PLAN
NOT TO SCALE

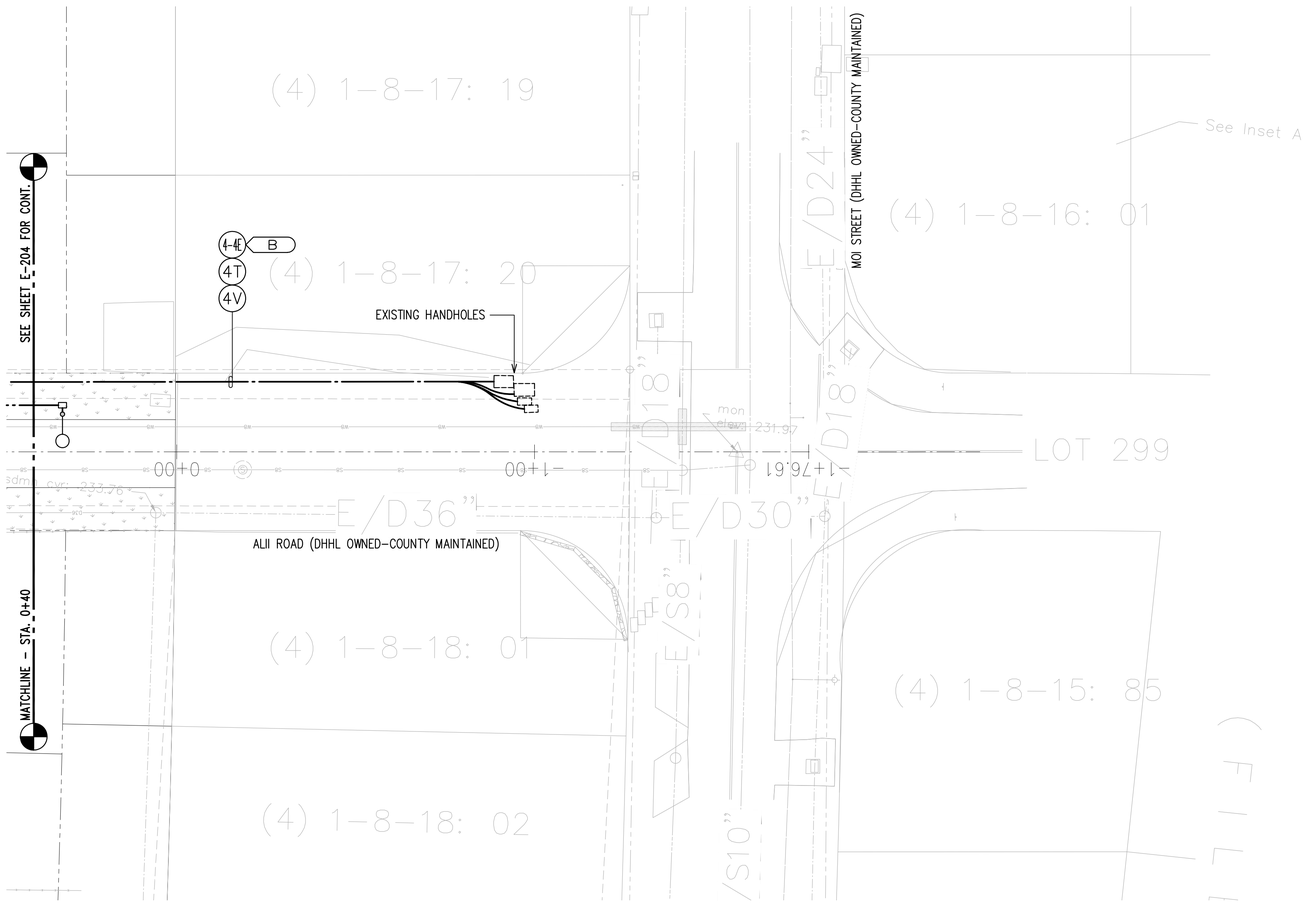

NORTH

ELECTRICAL DISTRIBUTION PLAN 4A
SCALE: 1"=20'

20' 10' 0 20' 40' 60'
SCALE: 1"=20'
GRAPHIC SCALE

JENSON J. SANTOS
LICENSED PROFESSIONAL ENGINEER
No. 14286-E
HAWAII, U.S.A.

This work was prepared by me or under my personal supervision. Drawings, specifications, and other documents prepared by me or under my supervision were not prepared for use on any other project. I am licensed as a Professional Engineer, Architect, Surveyor, and Landscape Architect under the laws of the State of Hawaii.

4/30/24

NOTE: Contractor to check and verify dimensions at job before proceeding with work. Do not scale drawings.

REVISION	DATE	DESCRIPTION	MADE BY	APPROVED

PROJECT:
DEPARTMENT OF HAWAIIAN HOME LANDS
SITE AND INFRASTRUCTURE IMPROVEMENTS
FOR HANAPĒPĒ RESIDENTIAL LOTS, PHASE 2
TMK: (4) 1-8-007: 003 (PORTION) & (4) 2-8-007: 001 TO 050 (PORTION)
Hanapēpē, Waimea, Kaua'i, Hawai'i

ELECTRICAL DISTRIBUTION PLAN 4A

THIS DOCUMENT CONTAINS INFORMATION PROPRIETARY TO SSFM INTERNATIONAL, INC. AND IS FURNISHED IN CONFIDENCE FOR THE LIMITED PURPOSE OF EVALUATION, BIDDING OR REVIEW. THIS DOCUMENT OR ITS CONTENTS MAY NOT BE USED FOR ANY OTHER PURPOSE AND MAY NOT BE REPRODUCED OR DISCLOSED TO OTHERS WITHOUT THE PRIOR WRITTEN CONSENT OF SSFM INTERNATIONAL, INC.

DATE
NOVEMBER 2022

SHEET NUMBER
E-204A

91 OF 109 SHEETS

2022-11-07 8:40 AM Z:\Acad\PROJECTS\218171B\J204_R6_218171B_Elec Dist Plan 4A

NOTES:

1. PROVIDE SELECT GRANULAR BEDDING BENEATH HANDHOLES SHALL BE PLACED IN RELATIVELY UNIFORM LIFTS NO GREATER THAN EIGHT (8) INCHES IN LOOSE THICKNESS, MOISTURE CONDITIONED TO OPTIMUM MOISTURE CONTENT, AND UNIFORMLY COMPACTED TO AT LEAST NINETY (90) PERCENT OF THE MAXIMUM DRY DENSITY (ASTM D1557–02). CONTRACTOR TO SCHEDULE WITH OWNER'S GEOTECHNICAL INSPECTOR FOR COMPACTION AND BEDDING INSTALLATION. PULLBOX/HANDHOLES TO BE INSTALLED FLUSH WITH WALKWAY.

2. PROVIDE MINIMUM 12" HORIZONTAL CLEARANCE BETWEEN DUCTLINE, PULLBOXES, HANDHOLES, MANHOLES, AND OTHER ELECTRICAL STRUCTURES AND ALL DRAIN STRUCTURES.

3. SEE SHEETS E–206 TO E–210 FOR STREET LIGHTING LAYOUT.

4. WHERE THERE ARE CONDUIT AND CONDUIT STUBOUTS NEAR THE WATER METER AND FIRE HYDRANT, OFFSET THE CONDUIT AND CONDUIT STUBOUT BY A MINIMUM OF 10' AWAY FROM THE WATER METER AND FIRE HYDRANT.

[5] KIUC TRANSFORMER EASEMENT.

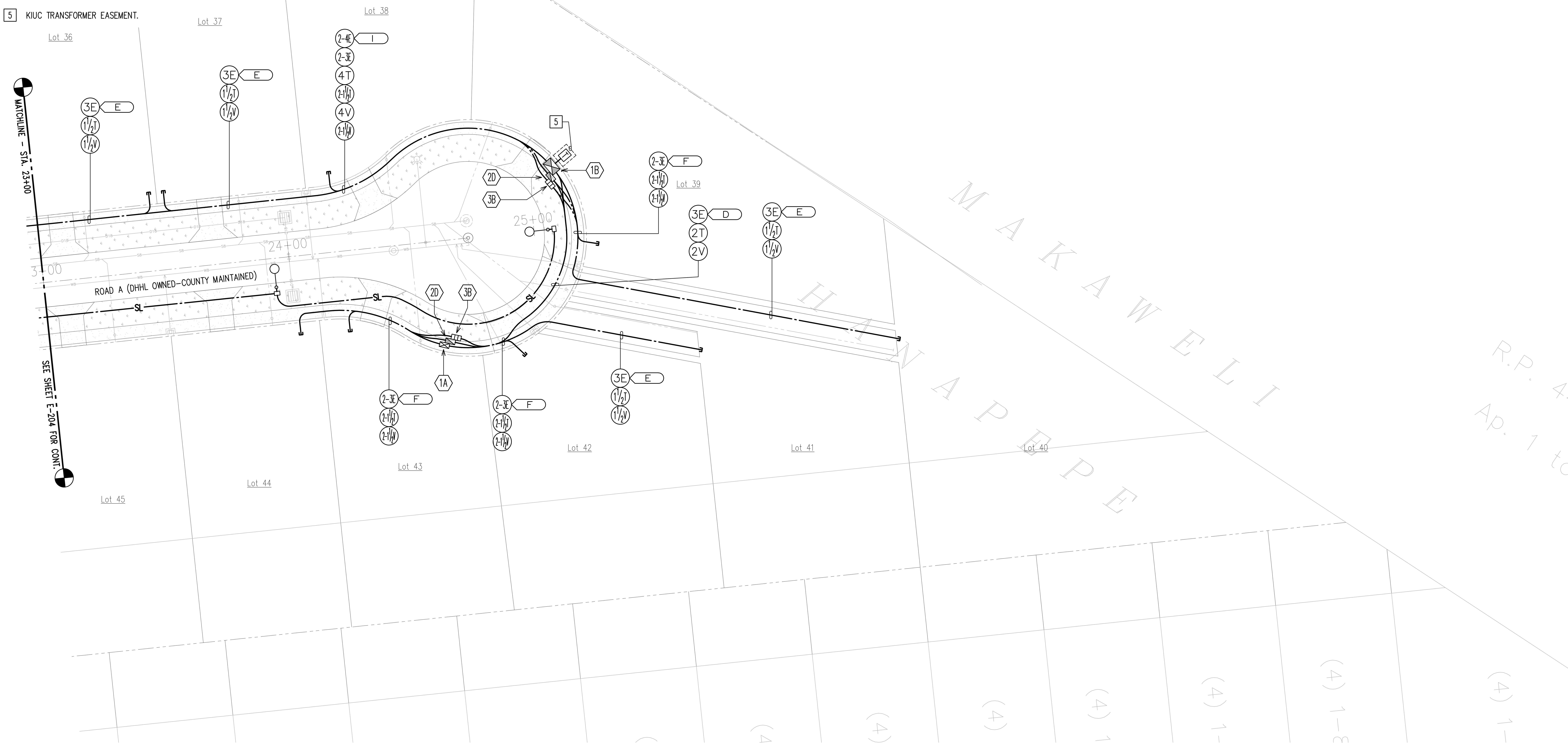

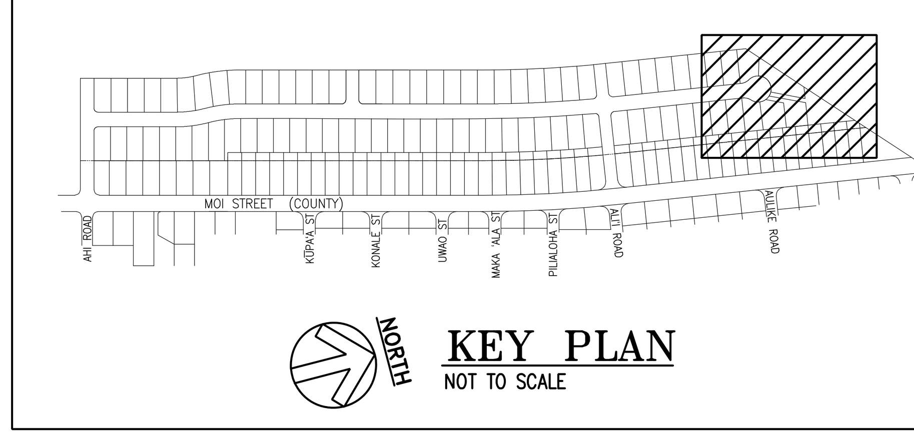

KEY PLAN
NOT TO SCALE

LICENSED PROFESSIONAL ENGINEER
JENSON J. SANTOS
No. 14286-E
HAWAII, U.S.A.

This work was prepared by me or under my supervision and construction of this project will be under my observation. (Observation of construction as defined in Chapter 16–115, Subchapter 1 Definitions of the Hawaii Administrative Rules, Professional Engineers, Architects, Surveyors, and Landscape Architects)

signature 4/30/24 expiration date of the license

NOTE: Contractor to check and verify dimensions at job before proceeding with work.

REVISION	DATE	DESCRIPTION	MADE BY	APPROVED

PROJECT:
DEPARTMENT OF HAWAIIAN HOME LANDS
SITE AND INFRASTRUCTURE IMPROVEMENTS
FOR HANAPĒPĒ RESIDENTIAL LOTS, PHASE 2
TMK: (4) 1-8-007: 003 (PORTION) & (4) 2-8-007: 001 TO 050 (PORTION)
Hanapēpē, Waimea, Kaua'i, Hawai'i

ELECTRICAL DISTRIBUTION PLAN 5

THIS DOCUMENT CONTAINS INFORMATION PROPRIETARY TO SSFM INTERNATIONAL, INC., AND IS FURNISHED IN CONFIDENCE FOR THE LIMITED PURPOSE OF EVALUATION, BIDDING OR REVIEW. THIS DOCUMENT OR ITS CONTENTS MAY NOT BE USED FOR ANY OTHER PURPOSE AND MAY NOT BE REPRODUCED OR DISCLOSED TO OTHERS WITHOUT THE PRIOR WRITTEN CONSENT OF SSFM INTERNATIONAL, INC.

ELECTRICAL DISTRIBUTION PLAN 5

SCALE: 1"=20'

GRAPHIC SCALE
20' 10' 0 20' 40' 60'
SCALE: 1"=20'

DATE
NOVEMBER 2022

SHEET NUMBER
E-205

2022-11-07 8:40 AM Z:\Acad\PROJECTS\218171B\E205_87_218171B_Elec Dist Plan 5

NOTES:

1. PROVIDE SELECT GRANULAR BEDDING BENEATH HANDHOLES SHALL BE PLACED IN RELATIVELY UNIFORM LIFTS NO GREATER THAN EIGHT (8) INCHES IN LOOSE THICKNESS, MOISTURE CONDITIONED TO OPTIMUM MOISTURE CONTENT, AND UNIFORMLY COMPACTED TO AT LEAST NINETY (90) PERCENT OF THE MAXIMUM DRY DENSITY (ASTM D1557-02). CONTRACTOR TO SCHEDULE WITH OWNER'S GEOTECHNICAL INSPECTOR FOR COMPACTION AND BEDDING INSTALLATION. PULLBOX/HANDHOLES TO BE INSTALLED FLUSH WITH WALKWAY.
2. PROVIDE MINIMUM 12" HORIZONTAL CLEARANCE BETWEEN DUCTLINE, PULLBOXES, HANDHOLES, MANHOLES, AND OTHER ELECTRICAL STRUCTURES AND ALL DRAIN STRUCTURES.
3. SEE SHEETS E-201 TO E-205 FOR ELECTRICAL UTILITY LAYOUT.
4. MAINTAIN MINIMUM 24" HORIZONTAL CLEARANCE TO DRIVEWAYS FOR STREET LIGHTS.

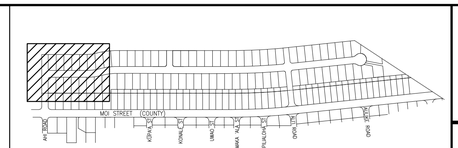

KEY PLAN
NOT TO SCALE

STATION NO 2+99

STATION NO 2+02

STATION NO 0+36

STATION NO 1+49

STATION NO 2+62

STATION NO 3+79

STATION NO 4+90

STATION NO 0+64

AHI ROAD (DHHL OWNED-COUNTY MAINTAINED)

ROAD A (DHHL OWNED-COUNTY MAINTAINED)

STREET LIGHT 17"X30" PULLBOX, TYPICAL

STREET LIGHT COMBINATION METER AND EQUIPMENT CABINET A, SEE SHEET E-405

Lot 1 Lot 2 Lot 3 Lot 4 Lot 5 Lot 6 Lot 7 Lot 8

Lot 82 Lot 81 Lot 80 Lot 79 Lot 78 Lot 77 Lot 76 Lot 75

MATCHLINE - STA. 0+20

SEE SHEET E-206A FOR CONT.

MATCHLINE - STA. 5+00

SEE SHEET E-207 FOR CONT.

STREET LIGHT PLAN 1

SCALE: 1"=20'

NORTH

20' 10' 0 20' 40' 60'

SCALE: 1"=20'

GRAPHIC SCALE

JENSON J. SANTOS
LICENSED PROFESSIONAL ENGINEER
No. 14286-E
HAWAII, U.S.A.

This work was prepared by me or under my personal supervision. It is not to be used for any other project. Licensed Professional Engineer, Architect, Surveyor, and Landscape Architect

4/30/24

NOTE: Contractor to check and verify dimension at job before proceeding with work. Any discrepancy to be reported to Engineer at once.

REVISION	DATE	DESCRIPTION	MADE BY	APPROVED

PROJECT:
DEPARTMENT OF HAWAIIAN HOME LANDS
SITE AND INFRASTRUCTURE IMPROVEMENTS
FOR HANAPĒPĒ RESIDENTIAL LOTS, PHASE 2
TMK: (4) 1-8-007: 003 (PORTION) & (4) 2-8-007: 001 TO 050 (PORTION)
Hanapēpē, Waimea, Kaua'i, Hawai'i

STREET LIGHT PLAN 1

THIS DOCUMENT CONTAINS INFORMATION PROPRIETARY TO SSFM INTERNATIONAL, INC., AND IS FURNISHED IN CONFIDENCE FOR THE LIMITED PURPOSE OF EVALUATION, BIDDING OR REVIEW. THIS DOCUMENT OR ITS CONTENTS MAY NOT BE USED FOR ANY OTHER PURPOSE AND MAY NOT BE REPRODUCED OR DISCLOSED TO OTHERS WITHOUT THE PRIOR WRITTEN CONSENT OF SSFM INTERNATIONAL, INC.

DATE
NOVEMBER 2022

SHEET NUMBER
E-206

93 OF 109 SHEETS

2022-11-07 8:55 AM Z:\Acad\PROJECTS\218718\D206_88_218718_St Lt Plan 1

NOTES:

1. PROVIDE SELECT GRANULAR BEDDING BENEATH HANDHOLES SHALL BE PLACED IN RELATIVELY UNIFORM LIFTS NO GREATER THAN EIGHT (8) INCHES IN LOOSE THICKNESS, MOISTURE CONDITIONED TO OPTIMUM MOISTURE CONTENT, AND UNIFORMLY COMPACTED TO AT LEAST NINETY (90) PERCENT OF THE MAXIMUM DRY DENSITY (ASTM D1557-02). CONTRACTOR TO SCHEDULE WITH OWNER'S GEOTECHNICAL INSPECTOR FOR COMPACTION AND BEDDING INSTALLATION. PULLBOX/HANDHOLES TO BE INSTALLED FLUSH WITH WALKWAY.
2. PROVIDE MINIMUM 12" HORIZONTAL CLEARANCE BETWEEN DUCTLINE, PULLBOXES, HANDHOLES, MANHOLES, AND OTHER ELECTRICAL STRUCTURES AND ALL DRAIN STRUCTURES.
3. SEE SHEETS E-201 TO E-205 FOR ELECTRICAL UTILITY LAYOUT.
4. MAINTAIN MINIMUM 24" HORIZONTAL CLEARANCE TO DRIVEWAYS FOR STREET LIGHTS.

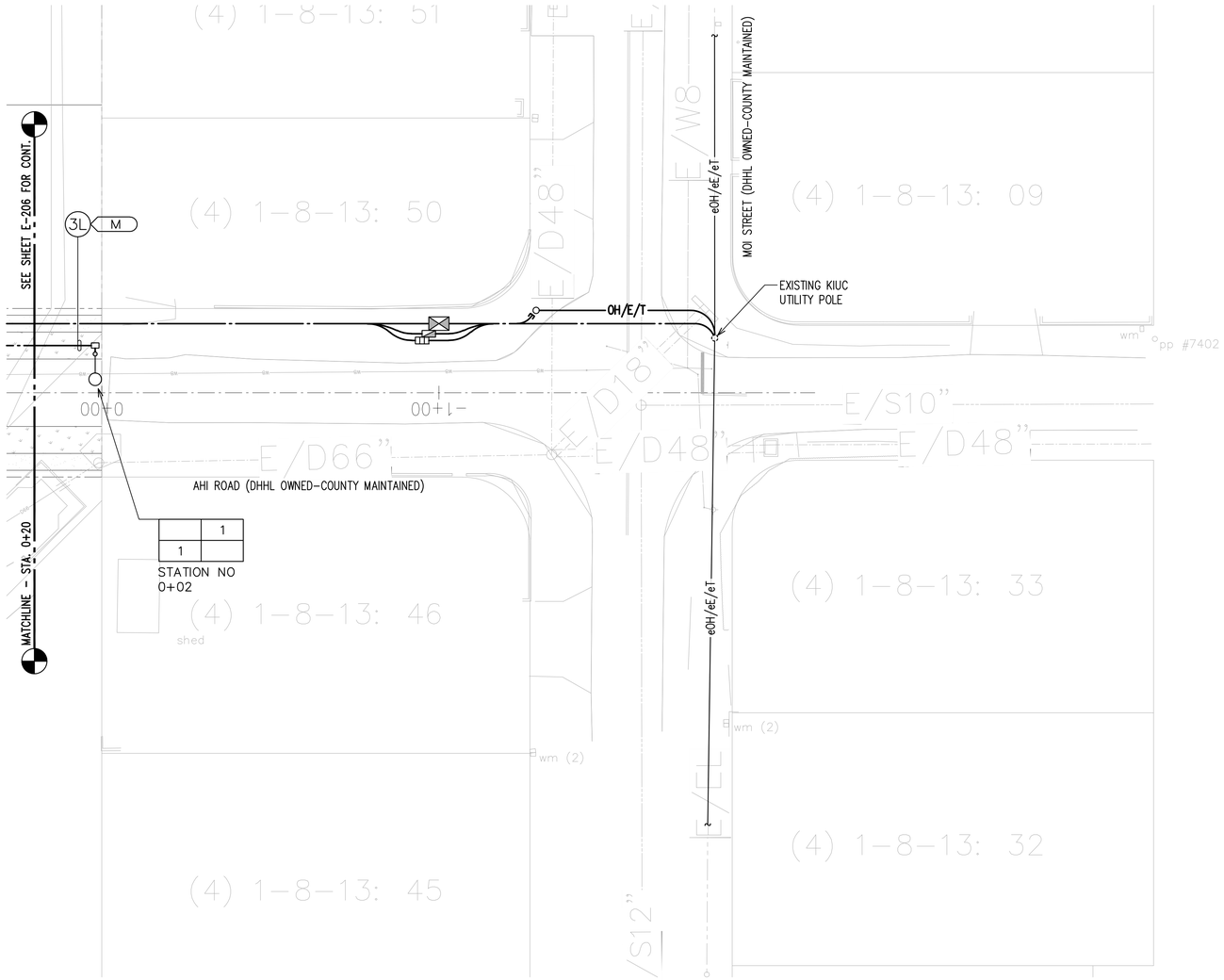

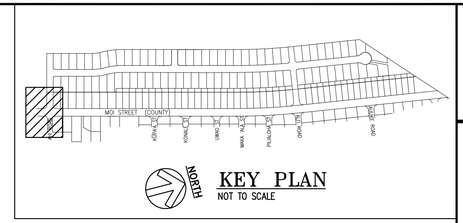

KEY PLAN
NOT TO SCALE

NORTH

STREET LIGHT PLAN 1A
SCALE: 1"=20'

20' 10' 0 20' 40' 60'
SCALE: 1"=20'
GRAPHIC SCALE

JENSON J. SANTOS
LICENSED PROFESSIONAL ENGINEER
No. 14286-E
HAWAII, U.S.A.

This work was prepared by me or under my supervision and I am a duly licensed professional engineer in the State of Hawaii. Date: 4/30/24
Registered Professional Engineer, Architect, Surveyor, and Landscape Architect
State of Hawaii
NOT VALID UNLESS SIGNED AND DATED

NOTE: Contractor to check and verify dimensions at job before proceeding with work.

REVISION	DATE	DESCRIPTION	MADE BY	APPROVED

PROJECT:
DEPARTMENT OF HAWAIIAN HOME LANDS
SITE AND INFRASTRUCTURE IMPROVEMENTS
FOR HANAPĒPĒ RESIDENTIAL LOTS, PHASE 2
TMK: (4) 1-8-007: 003 (PORTION) & (4) 2-8-007: 001 TO 050 (PORTION)
Hanapēpē, Waimea, Kaua'i, Hawai'i

STREET LIGHT PLAN 1A

THIS DOCUMENT CONTAINS INFORMATION PROPRIETARY TO SSFM INTERNATIONAL, INC. AND IS FURNISHED IN CONFIDENCE FOR THE LIMITED PURPOSE OF EVALUATION, BIDDING OR REVIEW. THIS DOCUMENT OR ITS CONTENTS MAY NOT BE USED FOR ANY OTHER PURPOSE AND MAY NOT BE REPRODUCED OR DISCLOSED TO OTHERS WITHOUT THE PRIOR WRITTEN CONSENT OF SSFM INTERNATIONAL, INC.

DATE
NOVEMBER 2022

SHEET NUMBER
E-206A
94 OF 109 SHEETS

2022-11-07 8:55 AM Z:\Acad\PROJECTS\218171B\E206A_89_218171B_S1 Lt Plan 1A

NOTES:

1. PROVIDE SELECT GRANULAR BEDDING BENEATH HANDHOLES SHALL BE PLACED IN RELATIVELY UNIFORM LIFTS NO GREATER THAN EIGHT (8) INCHES IN LOOSE THICKNESS, MOISTURE CONDITIONED TO OPTIMUM MOISTURE CONTENT, AND UNIFORMLY COMPACTED TO AT LEAST NINETY (90) PERCENT OF THE MAXIMUM DRY DENSITY (ASTM D1557-02). CONTRACTOR TO SCHEDULE WITH OWNER'S GEOTECHNICAL INSPECTOR FOR COMPACTION AND BEDDING INSTALLATION. PULLBOX/HANDHOLES TO BE INSTALLED FLUSH WITH WALKWAY.
2. PROVIDE MINIMUM 12" HORIZONTAL CLEARANCE BETWEEN DUCTLINE, PULLBOXES, HANDHOLES, MANHOLES, AND OTHER ELECTRICAL STRUCTURES AND ALL DRAIN STRUCTURES.
3. SEE SHEETS E-201 TO E-205 FOR ELECTRICAL UTILITY LAYOUT.
4. MAINTAIN MINIMUM 24" HORIZONTAL CLEARANCE TO DRIVEWAYS FOR STREET LIGHTS.

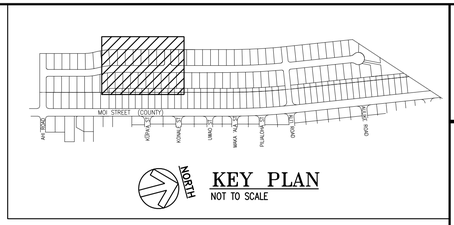

KEY PLAN
NOT TO SCALE

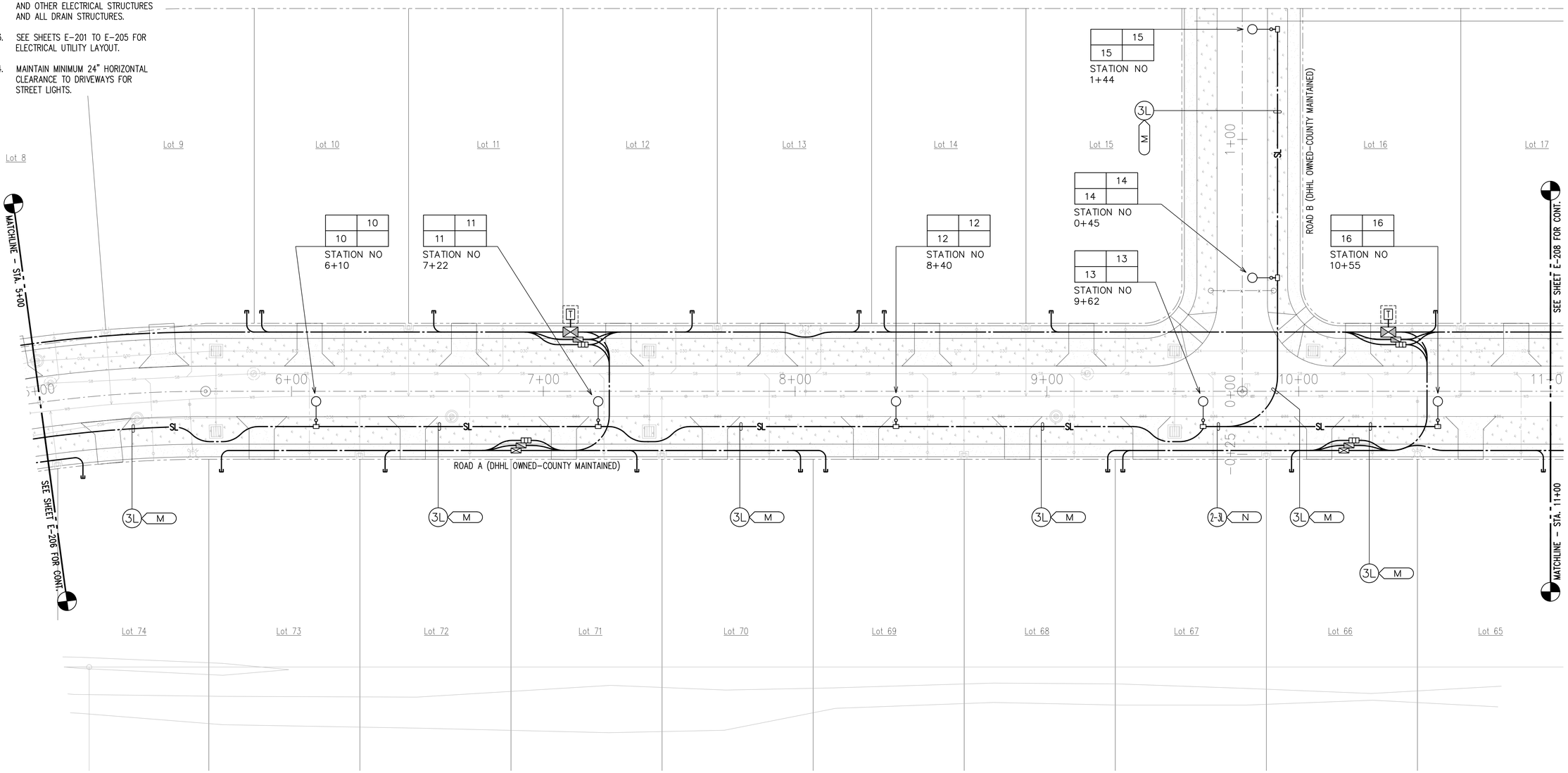

NORTH

STREET LIGHT PLAN 2
SCALE: 1"=20'

20' 10' 0 20' 40' 60'
SCALE: 1"=20'
GRAPHIC SCALE

JENSON J. SANTOS
LICENSED PROFESSIONAL ENGINEER
No. 14286-E
HAWAII, U.S.A.

This work was prepared by me or under my supervision and contribution to the project will be under my direction. Observation of construction as defined in Chapter 14, Section 14, Rules and Regulations of the Hawaii Administrative Rules, Professional Engineers, Architects, Surveyors, and Landscape Architects.
Signature
4/30/24
expiration date of the license
NOTE: Contractor to check and verify dimensions at job before proceeding with work.

REVISION	DATE	DESCRIPTION	MADE BY	APPROVED

PROJECT:
DEPARTMENT OF HAWAIIAN HOME LANDS
SITE AND INFRASTRUCTURE IMPROVEMENTS
FOR HANAPĒPĒ RESIDENTIAL LOTS, PHASE 2
TMK: (4) 1-8-007: 003 (PORTION) & (4) 2-8-007: 001 TO 050 (PORTION)
Hanapēpē, Waimea, Kaua'i, Hawai'i

STREET LIGHT PLAN 2

THIS DOCUMENT CONTAINS INFORMATION PROPRIETARY TO SSFM INTERNATIONAL, INC., AND IS FURNISHED IN CONFIDENCE FOR THE LIMITED PURPOSE OF EVALUATION, BIDDING OR REVIEW. THIS DOCUMENT OR ITS CONTENTS MAY NOT BE USED FOR ANY OTHER PURPOSE AND MAY NOT BE REPRODUCED OR DISCLOSED TO OTHERS WITHOUT THE PRIOR WRITTEN CONSENT OF SSFM INTERNATIONAL, INC.

DATE
NOVEMBER 2022

SHEET NUMBER
E-207

2022-11-07 8:56 AM Z:\Acad\PROJECTS\218171B\E207_90_218171B_St Lt Plan 2

NOTES:

1. PROVIDE SELECT GRANULAR BEDDING BENEATH HANDHOLES SHALL BE PLACED IN RELATIVELY UNIFORM LIFTS NO GREATER THAN EIGHT (8) INCHES IN LOOSE THICKNESS, MOISTURE CONDITIONED TO OPTIMUM MOISTURE CONTENT, AND UNIFORMLY COMPACTED TO AT LEAST NINETY (90) PERCENT OF THE MAXIMUM DRY DENSITY (ASTM D1557-02). CONTRACTOR TO SCHEDULE WITH OWNER'S GEOTECHNICAL INSPECTOR FOR COMPACTION AND BEDDING INSTALLATION. PULLBOX/HANDHOLES TO BE INSTALLED FLUSH WITH WALKWAY.
2. PROVIDE MINIMUM 12" HORIZONTAL CLEARANCE BETWEEN DUCTLINE, PULLBOXES, HANDHOLES, MANHOLES, AND OTHER ELECTRICAL STRUCTURES AND ALL DRAIN STRUCTURES.
3. SEE SHEETS E-201 TO E-205 FOR ELECTRICAL UTILITY LAYOUT.
4. MAINTAIN MINIMUM 24" HORIZONTAL CLEARANCE TO DRIVEWAYS FOR STREET LIGHTS.

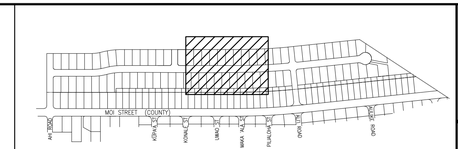

KEY PLAN
NOT TO SCALE

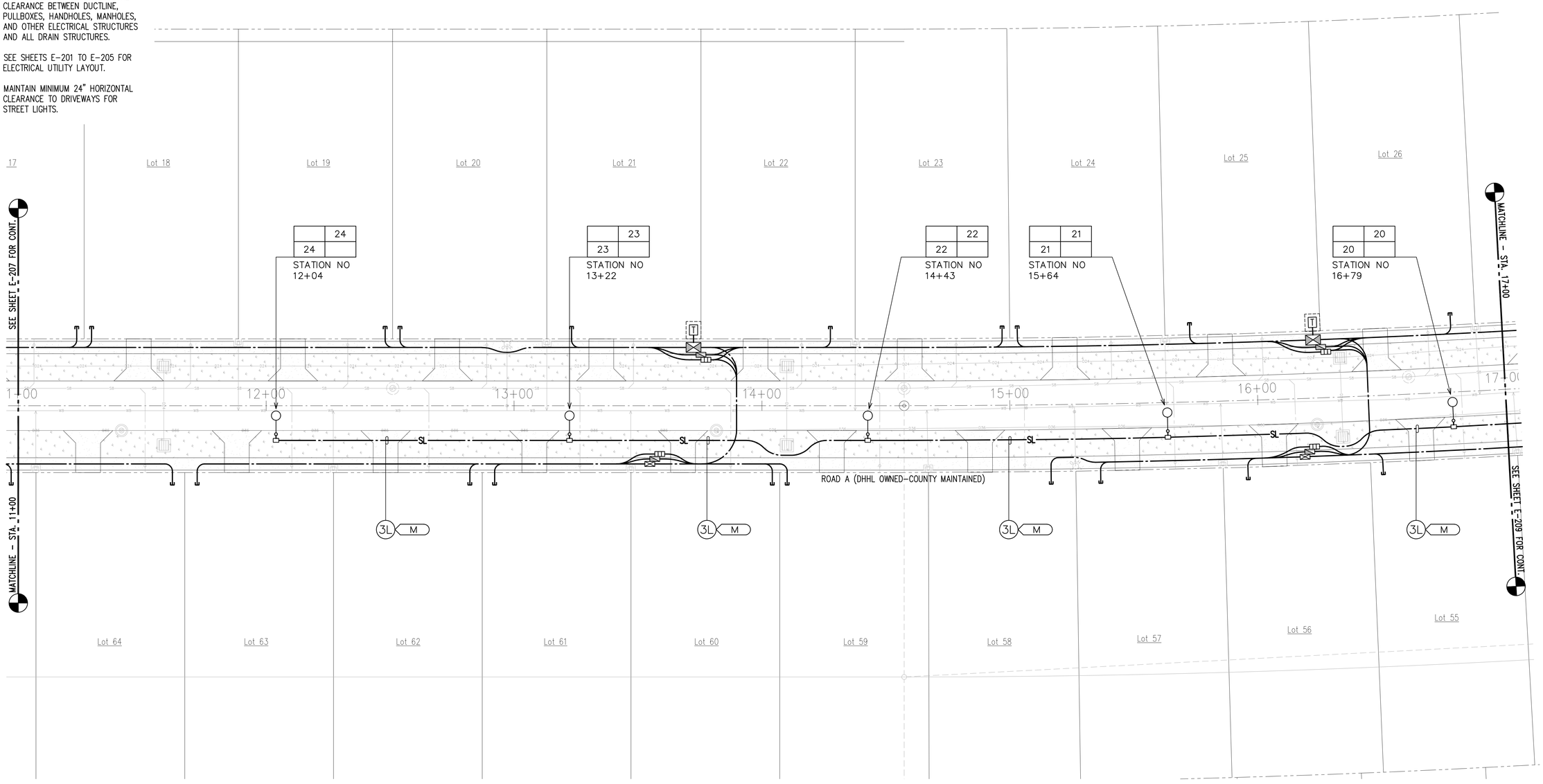

NORTH

STREET LIGHT PLAN 3
SCALE: 1"=20'

20' 10' 0 20' 40' 60'
SCALE: 1"=20'
GRAPHIC SCALE

JENSON J. SANTOS
LICENSED PROFESSIONAL ENGINEER
No. 14286-E
HAWAII, U.S.A.

This work was prepared by me or under my supervision. Date of expiration: 4/30/24. Licensed Professional Engineer, Architect, Surveyor, and Landscape Architect

4/30/24

NOTE: Contractor to check and verify dimensions at job before proceeding with work. Do not scale drawings.

REVISION	DATE	DESCRIPTION	MADE BY	APPROVED

PROJECT:
DEPARTMENT OF HAWAIIAN HOME LANDS
SITE AND INFRASTRUCTURE IMPROVEMENTS
FOR HANAPĒPĒ RESIDENTIAL LOTS, PHASE 2
TMK: (4) 1-8-007: 003 (PORTION) & (4) 2-8-007: 001 TO 050 (PORTION)
Hanapēpē, Waimea, Kaua'i, Hawai'i

STREET LIGHT PLAN 3

THIS DOCUMENT CONTAINS INFORMATION PROPRIETARY TO SSFM INTERNATIONAL, INC. AND IS FURNISHED IN CONFIDENCE FOR THE LIMITED PURPOSE OF EVALUATION, BIDDING OR REVIEW. THIS DOCUMENT OR ITS CONTENTS MAY NOT BE USED FOR ANY OTHER PURPOSE AND MAY NOT BE REPRODUCED OR DISCLOSED TO OTHERS WITHOUT THE PRIOR WRITTEN CONSENT OF SSFM INTERNATIONAL, INC.

DATE
NOVEMBER 2022

SHEET NUMBER
E-208

2022-11-07 8:56 AM Z:\Acad\PROJECTS\218171B\E208_01_218171B_St Lt Plan 3

NOTES:

1. PROVIDE SELECT GRANULAR BEDDING BENEATH HANDHOLES SHALL BE PLACED IN RELATIVELY UNIFORM LIFTS NO GREATER THAN EIGHT (8) INCHES IN LOOSE THICKNESS, MOISTURE CONDITIONED TO OPTIMUM MOISTURE CONTENT, AND UNIFORMLY COMPACTED TO AT LEAST NINETY (90) PERCENT OF THE MAXIMUM DRY DENSITY (ASTM D1557-02). CONTRACTOR TO SCHEDULE WITH OWNER'S GEOTECHNICAL INSPECTOR FOR COMPACTION AND BEDDING INSTALLATION. PULLBOX/HANDHOLES TO BE INSTALLED FLUSH WITH WALKWAY.
2. PROVIDE MINIMUM 12" HORIZONTAL CLEARANCE BETWEEN DUCTLINE, PULLBOXES, HANDHOLES, MANHOLES, AND OTHER ELECTRICAL STRUCTURES AND ALL DRAIN STRUCTURES.
3. SEE SHEETS E-201 TO E-205 FOR ELECTRICAL UTILITY LAYOUT.
4. MAINTAIN MINIMUM 24" HORIZONTAL CLEARANCE TO DRIVEWAYS FOR STREET LIGHTS.

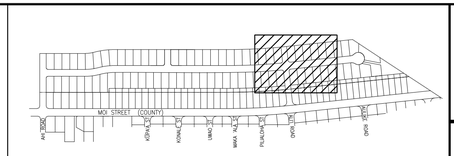

NORTH

KEY PLAN
NOT TO SCALE

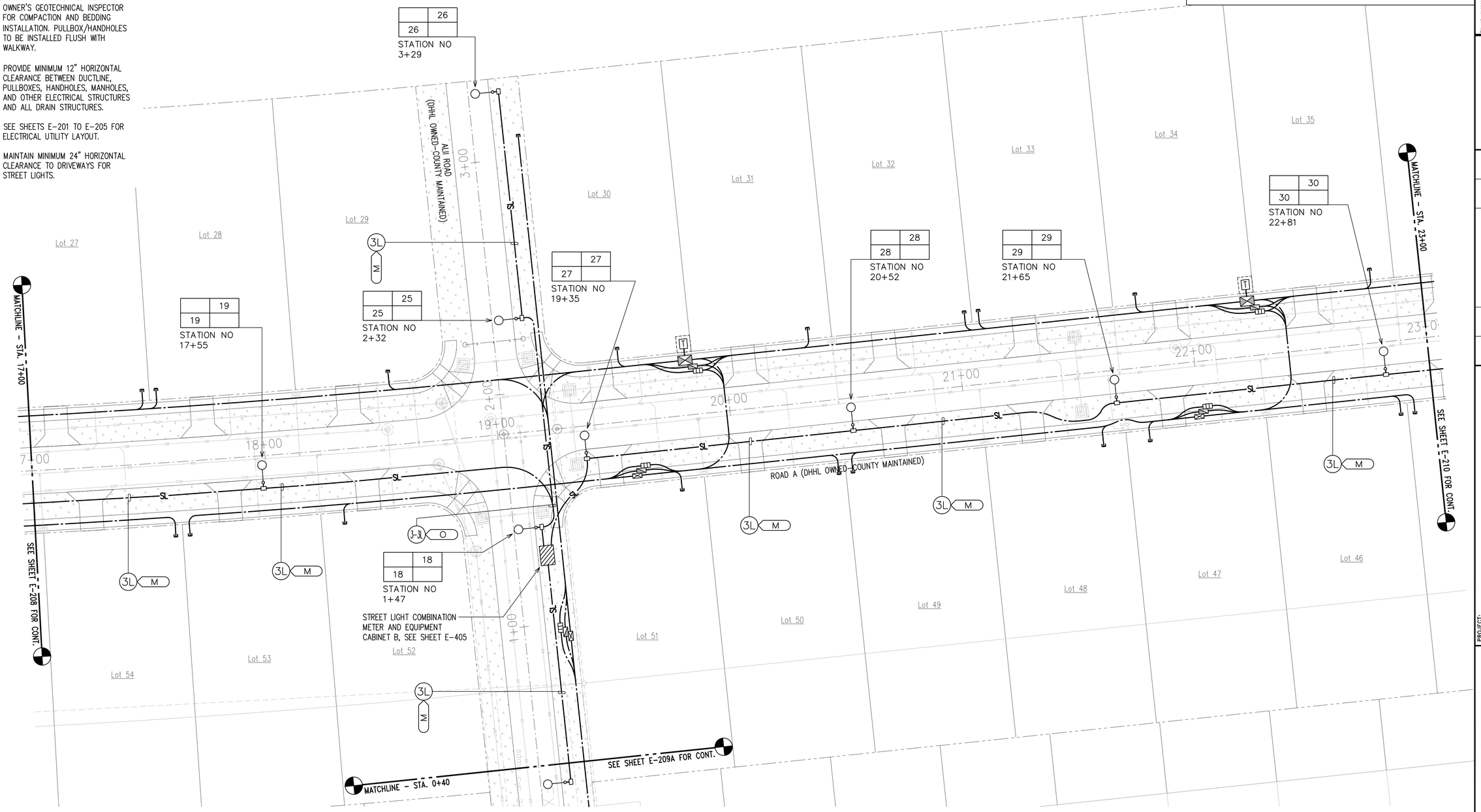

NORTH

STREET LIGHT PLAN 4
SCALE: 1"=20'

20' 10' 0 20' 40' 60'
SCALE: 1"=20'
GRAPHIC SCALE

JENSON J. SANTOS
LICENSED PROFESSIONAL ENGINEER
No. 14286-E
HAWAII, U.S.A.

This work was prepared by me or under my supervision and contribution of this project will be under my observation. Observation of construction is defined in Chapter 16-115, Subchapter 1, Definitions of the Hawaii Administrative Rules, Professional Engineers, Architects, Surveyors, and Landscape Architects.

Signature: 4/30/24
expiration date of the license

NOTE: Contractor to check and verify dimensions at job before proceeding with work.

REVISION	DATE	DESCRIPTION	MADE BY	APPROVED

PROJECT:
DEPARTMENT OF HAWAIIAN HOME LANDS
SITE AND INFRASTRUCTURE IMPROVEMENTS
FOR HANAPĒPĒ RESIDENTIAL LOTS, PHASE 2
TMK: (4) 1-8-007: 003 (PORTION) & (4) 2-8-007: 001 TO 050 (PORTION)
Hanapēpē, Waimea, Kaua'i, Hawai'i

STREET LIGHT PLAN 4

THIS DOCUMENT CONTAINS INFORMATION PROPRIETARY TO SSFM INTERNATIONAL, INC., AND IS FURNISHED IN CONFIDENCE FOR THE LIMITED PURPOSE OF EVALUATION, BIDDING OR REVIEW. THIS DOCUMENT OR ITS CONTENTS MAY NOT BE USED FOR ANY OTHER PURPOSE AND MAY NOT BE REPRODUCED OR DISCLOSED TO OTHERS WITHOUT THE PRIOR WRITTEN CONSENT OF SSFM INTERNATIONAL, INC.

DATE
NOVEMBER 2022

SHEET NUMBER
E-209

2022-11-07 8:56 AM Z:\Acad\PROJECTS\21817IB\E209_92_21817IB_St Lt Plan 4

NOTES:

1. PROVIDE SELECT GRANULAR BEDDING BENEATH HANDHOLES SHALL BE PLACED IN RELATIVELY UNIFORM LIFTS NO GREATER THAN EIGHT (8) INCHES IN LOOSE THICKNESS, MOISTURE CONDITIONED TO OPTIMUM MOISTURE CONTENT, AND UNIFORMLY COMPACTED TO AT LEAST NINETY (90) PERCENT OF THE MAXIMUM DRY DENSITY (ASTM D1557-02). CONTRACTOR TO SCHEDULE WITH OWNER'S GEOTECHNICAL INSPECTOR FOR COMPACTION AND BEDDING INSTALLATION. PULLBOX/HANDHOLES TO BE INSTALLED FLUSH WITH WALKWAY.
2. PROVIDE MINIMUM 12" HORIZONTAL CLEARANCE BETWEEN DUCTLINE, PULLBOXES, HANDHOLES, MANHOLES, AND OTHER ELECTRICAL STRUCTURES AND ALL DRAIN STRUCTURES.
3. SEE SHEETS E-201 TO E-205 FOR ELECTRICAL UTILITY LAYOUT.
4. MAINTAIN MINIMUM 24" HORIZONTAL CLEARANCE TO DRIVEWAYS FOR STREET LIGHTS.

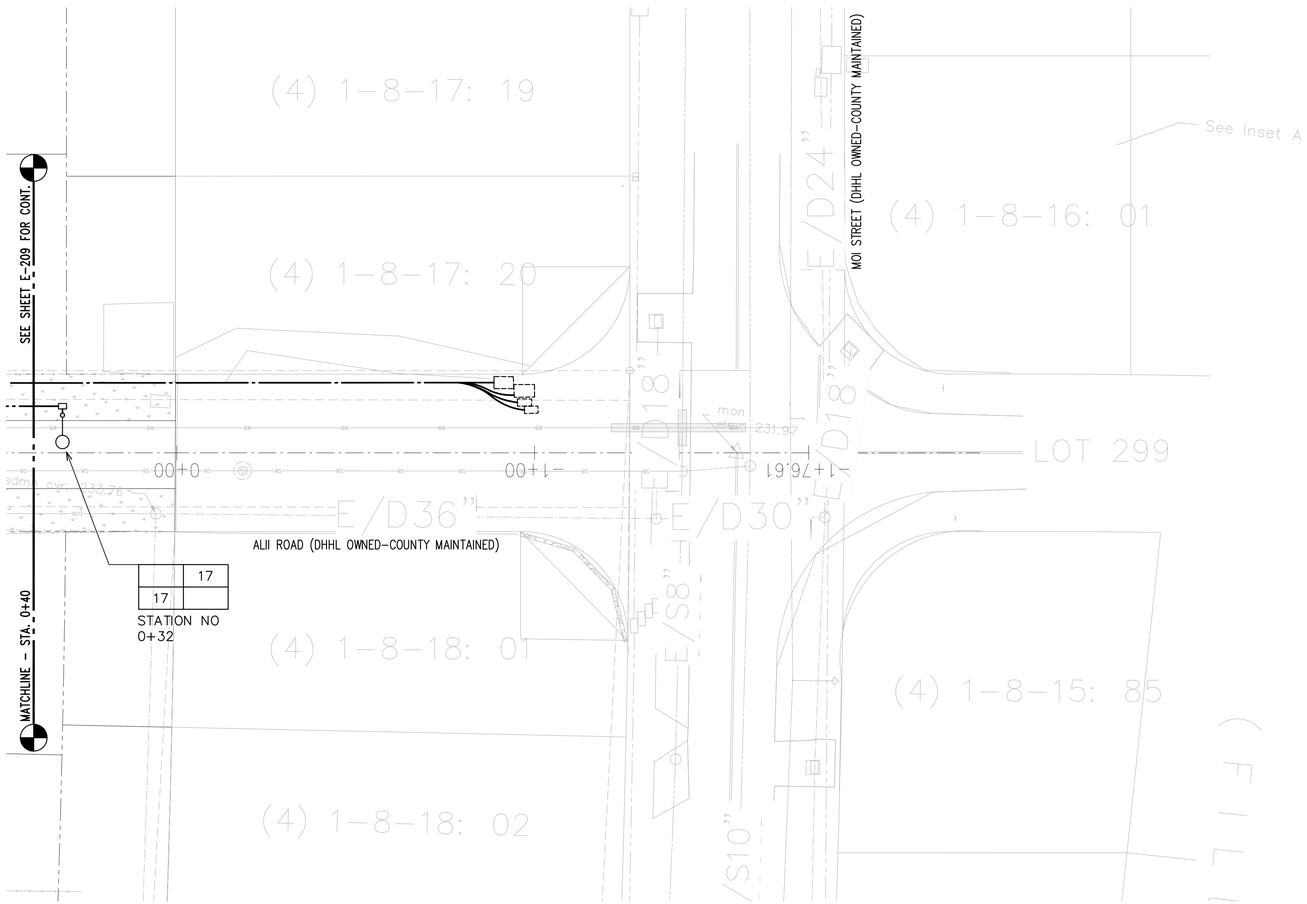

NORTH

STREET LIGHT PLAN 4A

SCALE: 1"=20'

NORTH

KEY PLAN

NOT TO SCALE

20' 10' 0 20' 40' 60'

SCALE: 1"=20'

GRAPHIC SCALE

JENSON J. SANTOS
LICENSED PROFESSIONAL ENGINEER
No. 14286-E
HAWAII, U.S.A.

This work was prepared by me or under my supervision and contribution to the project will be under my observation. Observation of construction as defined in Chapter 16-115, Subtitle Definitions of the Hawaii Administrative Rules, Professional Engineers, Architects, Surveyors, and Landscape Architects.

Signature: 4/30/24
expiration date of the license

NOTE: Contractor to check and verify dimensions at job before proceeding with work.

REVISION	DATE	DESCRIPTION	MADE BY	APPROVED

PROJECT:
DEPARTMENT OF HAWAIIAN HOME LANDS
SITE AND INFRASTRUCTURE IMPROVEMENTS
FOR HANAPĒPĒ RESIDENTIAL LOTS, PHASE 2
TMK: (4) 1-8-007: 003 (PORTION) & (4) 2-8-007: 001 TO 050 (PORTION)
Hanapēpē, Waimea, Kaua'i, Hawai'i

STREET LIGHT PLAN 4A

THIS DOCUMENT CONTAINS INFORMATION PROPRIETARY TO SSFM INTERNATIONAL, INC. AND IS FURNISHED IN CONFIDENCE FOR THE LIMITED PURPOSE OF EVALUATION, BIDDING OR REVIEW. THIS DOCUMENT OR ITS CONTENTS MAY NOT BE USED FOR ANY OTHER PURPOSE AND MAY NOT BE REPRODUCED OR DISCLOSED TO OTHERS WITHOUT THE PRIOR WRITTEN CONSENT OF SSFM INTERNATIONAL, INC.

DATE
NOVEMBER 2022

SHEET NUMBER
E-209A

2022-11-07 8:56 AM Z:\Acad\PROJECTS\218171B\E209A_03_218171B_St Lt Plan 4A

NOTES:

1. PROVIDE SELECT GRANULAR BEDDING BENEATH HANDHOLES SHALL BE PLACED IN RELATIVELY UNIFORM LIFTS NO GREATER THAN EIGHT (8) INCHES IN LOOSE THICKNESS, MOISTURE CONDITIONED TO OPTIMUM MOISTURE CONTENT, AND UNIFORMLY COMPACTED TO AT LEAST NINETY (90) PERCENT OF THE MAXIMUM DRY DENSITY (ASTM D1557-02). CONTRACTOR TO SCHEDULE WITH OWNER'S GEOTECHNICAL INSPECTOR FOR COMPACTION AND BEDDING INSTALLATION. PULLBOX/HANDHOLES TO BE INSTALLED FLUSH WITH WALKWAY.
2. PROVIDE MINIMUM 12" HORIZONTAL CLEARANCE BETWEEN DUCTLINE, PULLBOXES, HANDHOLES, MANHOLES, AND OTHER ELECTRICAL STRUCTURES AND ALL DRAIN STRUCTURES.
3. SEE SHEETS E-201 TO E-205 FOR ELECTRICAL UTILITY LAYOUT.
4. MAINTAIN MINIMUM 24" HORIZONTAL CLEARANCE TO DRIVEWAYS FOR STREET LIGHTS.

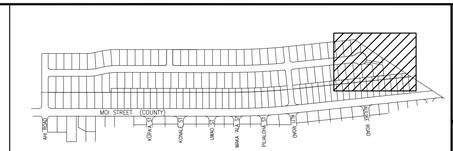

NORTH

KEY PLAN
NOT TO SCALE

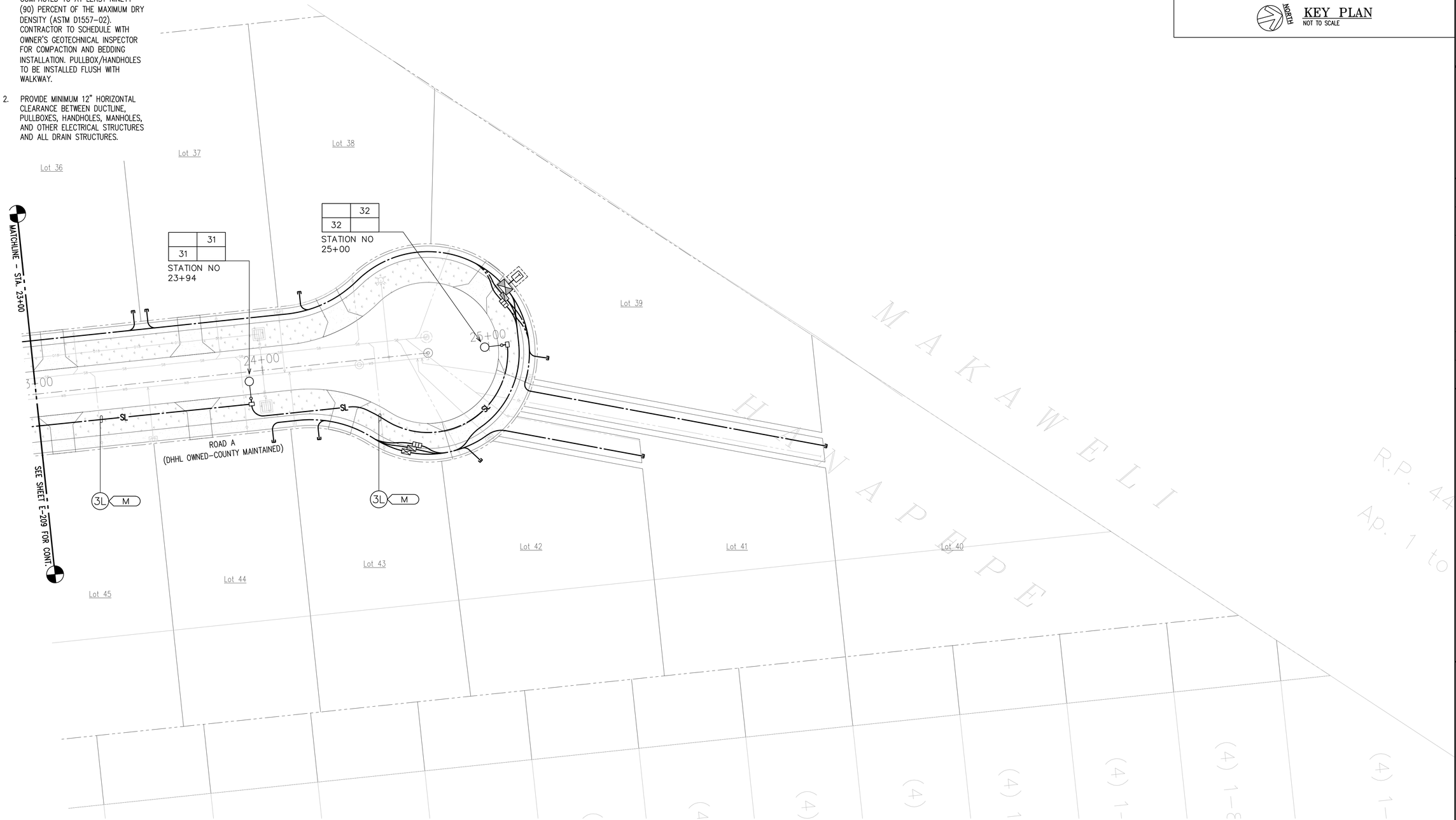

NORTH

STREET LIGHT PLAN 5
SCALE: 1"=20'

20' 10' 0 20' 40' 60'
SCALE: 1"=20'
GRAPHIC SCALE

JENSON J. SANTOS
LICENSED PROFESSIONAL ENGINEER
No. 14286-E
HAWAII, U.S.A.

This work was prepared by me or under my supervision. Date of expiration: 04/30/24. Licensed Professional Engineer, Architect, Surveyor, and Landscape Architect.

4/30/24

NOTE: Contractor to check and verify dimensions at job before proceeding with work. Report discrepancies to Engineer/Architect of the Scope

REVISION	DATE	DESCRIPTION	MADE BY	APPROVED

PROJECT:
DEPARTMENT OF HAWAIIAN HOME LANDS
SITE AND INFRASTRUCTURE IMPROVEMENTS
FOR HANAPĒPĒ RESIDENTIAL LOTS, PHASE 2
TMK: (4) 1-8-007: 003 (PORTION) & (4) 2-8-007: 001 TO 050 (PORTION)
Hanapēpē, Waimea, Kaua'i, Hawai'i

STREET LIGHT PLAN 5

THIS DOCUMENT CONTAINS INFORMATION PROPRIETARY TO SSFM INTERNATIONAL, INC. AND IS FURNISHED IN CONFIDENCE FOR THE LIMITED PURPOSE OF EVALUATION, BIDDING OR REVIEW. THIS DOCUMENT OR ITS CONTENTS MAY NOT BE USED FOR ANY OTHER PURPOSE AND MAY NOT BE REPRODUCED OR DISCLOSED TO OWNERS WITHOUT THE PRIOR WRITTEN CONSENT OF SSFM INTERNATIONAL, INC.

DATE
NOVEMBER 2022

SHEET NUMBER
E-210

99 OF 109 SHEETS

2022-11-07 8:59 AM Z:\Acad\PROJECTS\21817\BV\21D_94_21817TB_2R Lt Plan 5

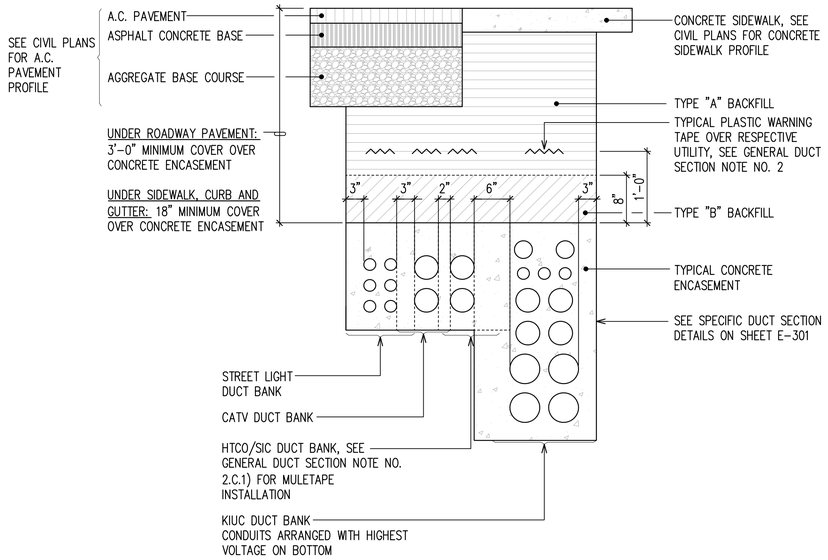

1 E-300 TYPICAL CONCRETE ENCASED DUCT SECTION DETAILS

NOT TO SCALE

MINIMUM DUCT SEPARATION DIMENSION BETWEEN DUCT SYSTEMS (CONCRETE ENCASED):

ELEC – ELEC:	1.5"
ELEC – OTHER SYSTEMS:	6"
TEL – TEL:	1.5"
TEL – ELEC:	6"
TEL – CATV:	2"
CATV – CATV:	1.5"
CATV – ELEC:	6"
CATV – TEL:	2"

MINIMUM OF 3" CONCRETE ENCASEMENT SHALL BE PROVIDED AROUND DUCTBANK

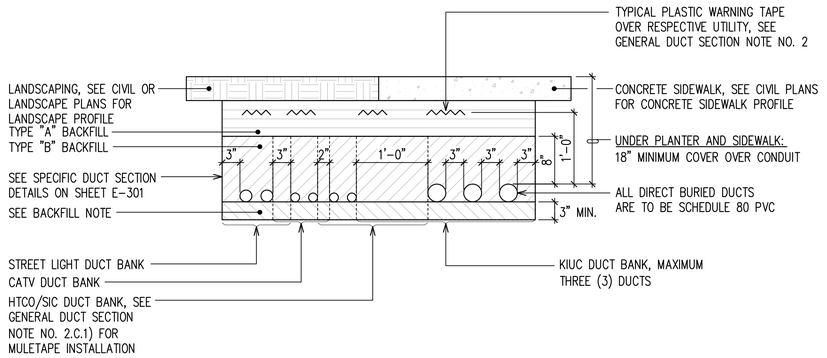

2 E-300 TYPICAL DIRECT BURIED DUCT SECTION DETAILS

NOT TO SCALE

MINIMUM DUCT SEPARATION DIMENSION BETWEEN DUCT SYSTEMS (DIRECT BURIED):

ELEC – ELEC:	3"
ELEC – OTHER SYSTEMS:	12"
TEL – TEL:	1.5"
TEL – ELEC:	12"
TEL – CATV:	2"
CATV – CATV:	1.5"
CATV – ELEC:	12"
CATV – TEL:	2"

MINIMUM OF 3" TYPE "B" BACKFILL SHALL BE PROVIDED AROUND DUCTBANK

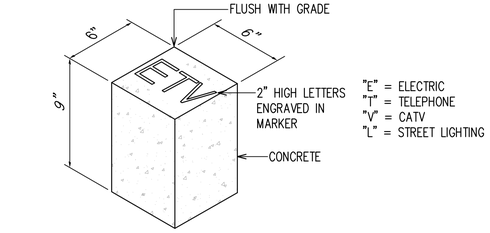

3 E-300 CONCRETE CONDUIT STUB-OUT MARKER

NOT TO SCALE

BACKFILL NOTES:

TYPE "A" BACKFILL – EARTH & GRAVEL. ROCK SIZE TO BE 1" MAX & THE MIXTURE TO CONTAIN NOT MORE THAN 50% BY VOLUME OF ROCK PARTICLES. THE MATERIAL SHALL BE NONEXPANSIVE. 95% COMPACTION.

TYPE "B" BACKFILL – EARTH & GRAVEL. MIXTURE MUST PASS A $\frac{1}{2}$" MESH SCREEN & CONTAIN NOT MORE THAN 20% BY VOLUME OF ROCK PARTICLES. 95% COMPACTION.

NOTE – IF NORMAL MATERIAL AT BOTTOM OF TRENCH IS NOT TYPE "B", AN ADDITIONAL 3" SHALL BE EXCAVATED & TYPE "B" BACKFILL PROVIDED.

CONCRETE – 3" ENCASEMENT, 2800 PSI COMPRESSIVE STRENGTH @ 28 DAYS. WITH A MAXIMUM AGGREGATE SIZE OF $\frac{3}{4}$".

CONDUIT SCHEDULE

ITEM	DESCRIPTION
2E	HECO 1–2"C
2-2E	HECO 2–2"C
3E	HECO 1–3"C
2-3E	HECO 2–3"C
3-3E	HECO 3–3"C
1½T	HTCO 1–1½"C, PVC SCHD. 40
2-1½T	HTCO 2–1½"C, PVC SCHD. 40
3-1½T	HTCO 3–1½"C, PVC SCHD. 40
2T	HTCO 1–2"C, PVC SCHD. 40
4T	HTCO 1–4"C, PVC SCHD. 40
2-4T	HTCO 2–4"C, PVC SCHD. 40
1½V	CATV 1–1½"C, PVC SCHD. 40
2-1½V	CATV 2–1½"C, PVC SCHD. 40
3-1½V	CATV 3–1½"C, PVC SCHD. 40
2V	CATV 1–2"C, PVC SCHD. 40
4V	CATV 1–4"C, PVC SCHD. 40
2-4V	CATV 2–4"C, PVC SCHD. 40
½L	STREET LIGHT 1–1½"C, PVC SCHD. 40
3L	STREET LIGHT 1–3"C, PVC SCHD. 40

NOTE: DASHED INDICATES EXISTING

GENERAL DUCT SECTION NOTES:

1. FOR TRENCH RESTORATION DETAIL REQUIREMENTS, SEE SHEET CIVIL SHEETS.
2. THE METAL DETECTABLE RED PLASTIC WARNING TAPE SHALL BE A MINIMUM 4 MILS THICK AND 6" WIDE WITH A CONTINUOUS METALLIC BACKING AND CORROSION RESISTANT 1 MIL THICK FOIL CORE. PRIVATE STREET LIGHTING DUCTS, THE MESSAGE ON THE TAPE SHALL READ, "CAUTION – STREET LIGHTING CABLES BURIED BELOW," UTILIZING 1 1/2 INCHES SERIES "C" BLOCK LETTERING. THE MESSAGE WILL BE REPEATED WITH A 4 1/4" SPACING BETWEEN TOP LINE OF MESSAGE AND START OF NEXT REPEAT.
   - A. FOR THE RESPECTIVE UTILITY COMPANY DUCTS, PROVIDE METAL DETECTABLE WARNING TAPE OVER RESPECTIVE UTILITY COMPANY DUCTS PER RESPECTIVE UTILITY COMPANY REQUIREMENTS AND APPROVAL.
   - B. FOR KIUC, PROVIDE WARNING TAPE PER KIUC SPECIFICATION M0302–0.
   - C. FOR HTCO/SIC:
     1) CONTRACTOR SHALL PLACE MULETAPE (WP 1800P) IN EACH DUCT THROUGHOUT ITS ENTIRE LENGTH WITH PROTRUSIONS OF 2 FEET IN MANHOLES AND HANDHOLES AT EACH END, AND 1 FOOT IN PULLBOXES. MULETAPE IS RATED FOR 1800 LB PULL AND HAS FOOTAGE MARKINGS FOR MEASURING DUCT LENGTHS.
     2) CONTRACTOR SHALL PLACE 8–MIL ORANGE COLORED PLASTIC WARNING TAPE, NOT LESS THAN 4" WIDE, ENTIRE LENGTH OF TRENCH FOR ALL UNDERGROUND INSTALLATIONS. TAPE SHOULD READ "WARNING–STOP DIGGING–CALL HTCO/SIC, COMMUNICATIONS CABLE BURIED BELOW, FAILURE TO COMPLY COULD RESULT IN LEGAL ACTION".
3. THE CONTRACTOR MAY BEGIN BACKFILLING THE CONDUIT TRENCH WHEN THE CONCRETE REACHES 2800 PSI COMPRESSIVE STRENGTH OR AFTER 3 DAYS, WHICHEVER IS LATER.

APPROVED BY:

KAUA'I ISLAND UTILITY COOPERATIVE — DATE

HAWAIIAN TELCOM — DATE

SPECTRUM — DATE

JENSON J. SANTOS LICENSED PROFESSIONAL ENGINEER No. 14286-E HAWAII, U.S.A.

This work was prepared by me or under my supervision. Drawings, specifications, and other documents prepared by this Professional Engineer, Architect, Surveyor, and Landscape Architect shall not be used in whole or in part for any other project without the written consent of this licensee.

4/30/24

NOTE: Contractor to check and verify dimensions at job before proceeding with work.

REVISION	DATE	DESCRIPTION	MADE BY	APPROVED

PROJECT:
DEPARTMENT OF HAWAIIAN HOME LANDS
SITE AND INFRASTRUCTURE IMPROVEMENTS
FOR HANAPĒPĒ RESIDENTIAL LOTS, PHASE 2
TMK: (4) 1-8-007: 003 (PORTION) & (4) 2-8-007: 001 TO 050 (PORTION)
Hanapēpē, Waimea, Kaua'i, Hawai'i

TYPICAL TRENCHING DETAILS AND CONDUIT SCHEDULE

THIS DOCUMENT CONTAINS INFORMATION PROPRIETARY TO SSFM INTERNATIONAL, INC. AND IS FURNISHED IN CONFIDENCE FOR THE LIMITED PURPOSE OF EVALUATION, BIDDING OR REVIEW. THIS DOCUMENT OR ITS CONTENTS MAY NOT BE USED FOR ANY OTHER PURPOSE AND MAY NOT BE REPRODUCED OR DISCLOSED TO OTHERS WITHOUT THE PRIOR WRITTEN CONSENT OF SSFM INTERNATIONAL, INC.

DATE
NOVEMBER 2022

SHEET NUMBER
E-300

100 OF 109 SHEETS

2022-10-27 7:52 AM Z:\Acad\PROJECTS\218171B\I300_05_218171B_Typ Trench Dets and Conduit Sched

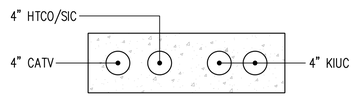

SECTION (A)

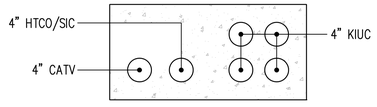

SECTION (B)

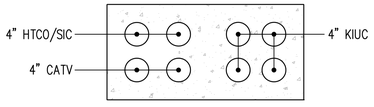

SECTION (C)

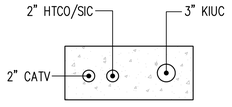

SECTION (D)

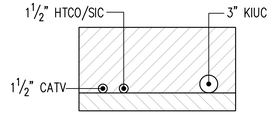

SECTION (E)

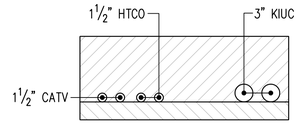

SECTION (F)

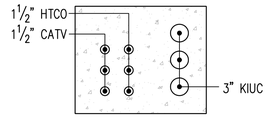

SECTION (G)

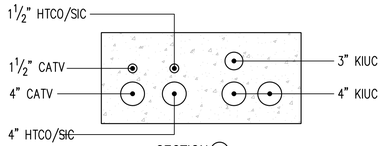

SECTION (H)

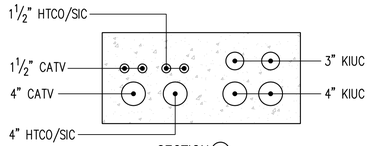

SECTION (I)

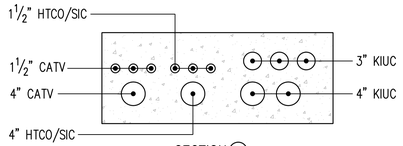

SECTION (J)

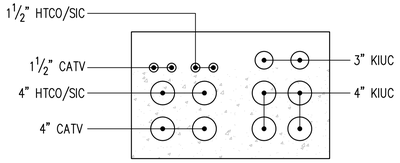

SECTION (K)

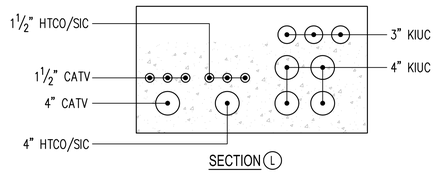

SECTION (L)

SECTION (L)

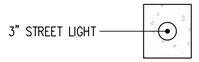

SECTION (M)

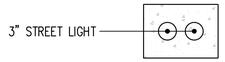

SECTION (N)

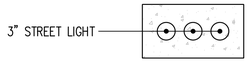

SECTION (O)

1 E-301 TYPICAL DUCT SECTIONS
SCALE: 1"=1'-0"

APPROVED BY:

KAUA'I ISLAND UTILITY COOPERATIVE — DATE

HAWAIIAN TELCOM — DATE

SPECTRUM — DATE

JENSON J. SANTOS
LICENSED PROFESSIONAL ENGINEER
No. 14286-E
HAWAII, U.S.A.

This work was prepared by me or under my supervision. Date of expiration of the license is 4/30/24. Pages or sheets covered by this seal: Professional Engineer, Architect, Surveyor, and Landscape Architect

4/30/24

NOTE: Contractor to check and verify dimensions at job before proceeding with work.

REVISION	DATE	DESCRIPTION	MADE BY	APPROVED

PROJECT:
DEPARTMENT OF HAWAIIAN HOME LANDS
SITE AND INFRASTRUCTURE IMPROVEMENTS
FOR HANAPĒPĒ RESIDENTIAL LOTS, PHASE 2
TMK: (4) 1-8-007: 003 (PORTION) & (4) 2-8-007: 001 TO 050 (PORTION)
Hanapēpē, Waimea, Kaua'i, Hawai'i

TYPICAL DUCT SECTIONS

THIS DOCUMENT CONTAINS INFORMATION PROPRIETARY TO SSFM INTERNATIONAL, INC. AND IS FURNISHED IN CONFIDENCE FOR THE LIMITED PURPOSE OF EVALUATION, BIDDING OR REVIEW. THIS DOCUMENT OR ITS CONTENTS MAY NOT BE USED FOR ANY OTHER PURPOSE AND MAY NOT BE REPRODUCED OR DISCLOSED TO OTHERS WITHOUT THE PRIOR WRITTEN CONSENT OF SSFM INTERNATIONAL, INC.

DATE
NOVEMBER 2022

SHEET NUMBER
E-301

101 OF 109 SHEETS

2022-10-27 7:52 AM Z:\Acad\PROJECTS\218171B\301_96_218171B_Typ Duct Sects

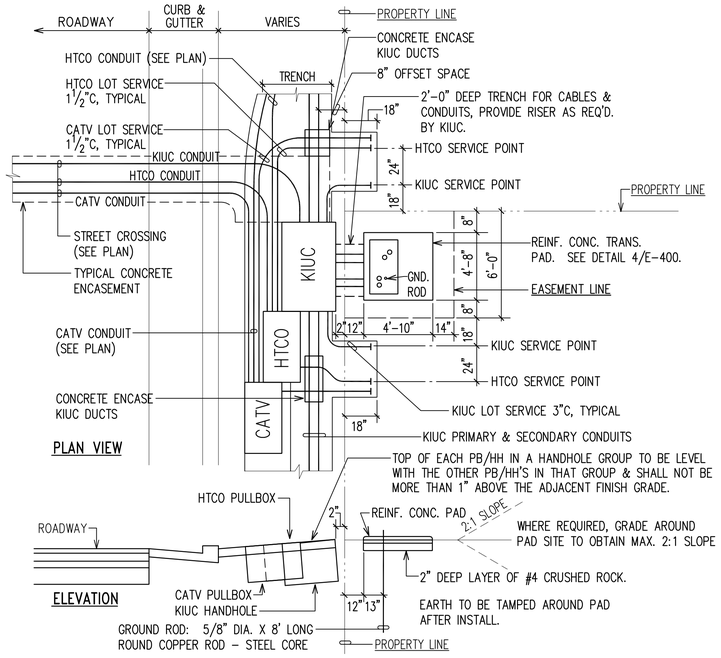

1 E-400 **TYPICAL TRANSFORMER PAD LOT**
NOT TO SCALE

NOTES:

1. PROVIDE #4 BARE COPPER GND WIRE FROM HTCO P.B. TO KIUC P.B. OR TRENCH AREA WHERE INDICATED ON PLAN. PROVIDE 5'-0" SLACK NEATLY COILED IN EACH AREA FOR CONNECTION BY RESPECTIVE UTILITY COMPANY.
2. GRADE AND COMPACT LOT AS REQUIRED BY KIUC.
3. HIGHEST FRONT CORNER OF TRANSFORMER PAD LOT SHALL MATCH FINAL SIDEWALK GRADE.

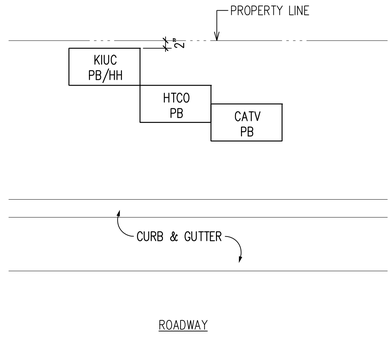

3 E-400 **TYPICAL HANDHOLE GROUP ARRANGEMENT**
NOT TO SCALE

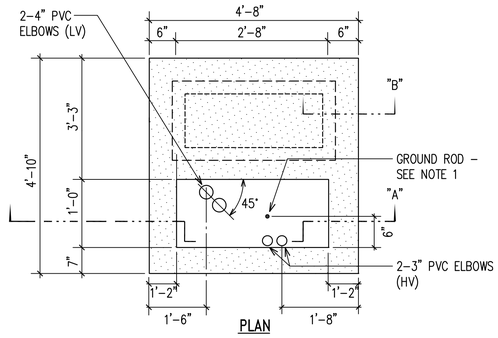

NOTE(S):

1. GROUND ROD, 5/8" DIA. X 8'-0", FURNISHED AND INSTALLED BY THE DEVELOPER/CONTRACTOR. IF THE RESISTANCE EXCEEDS 25-OHMS, INSTALL ADDITIONAL GROUND ROD.
2. PAD TO BE INSTALLED ON FIRM UNDISTURBED SOIL OR ON 95% COMPACTED BACKFILL.
3. PVC ELBOWS TO BE STUBBED OUT 3" ABOVE FIRM UNDISTURBED SOIL OR COMPACTED BACKFILL AT A 10-15° ANGLE.

4 E-400 **CONC. TRANSFORMER PAD DETAIL SINGLE PHASE, 25-167 KVA**
NOT TO SCALE

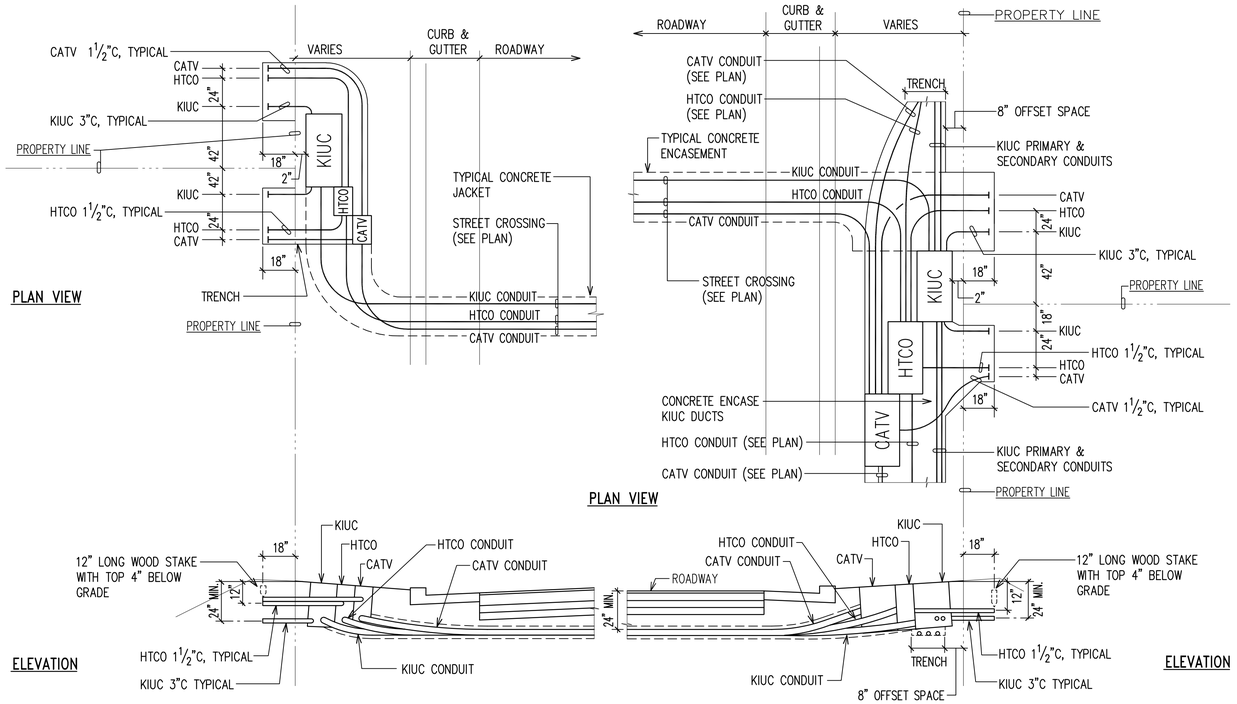

2 E-400 **TYPICAL LOT SERVICE**
NOT TO SCALE

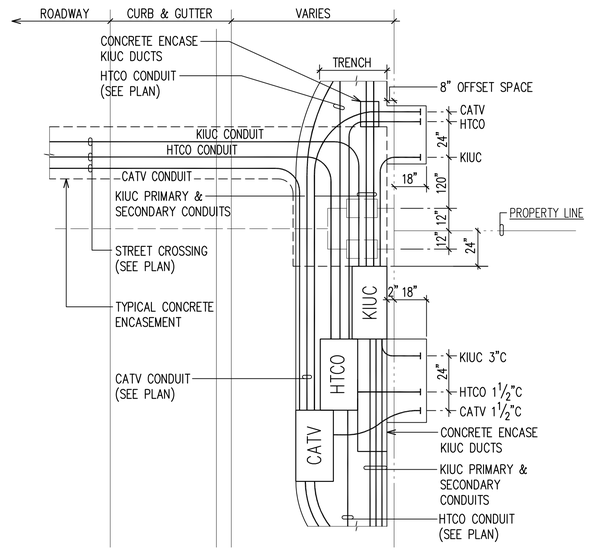

5 E-400 **TYPICAL LOT SERVICE AT WATER METER PULLBOX LOCATION**
NOT TO SCALE

APPROVED BY:

KAUA'I ISLAND UTILITY COOPERATIVE — DATE

HAWAIIAN TELCOM — DATE

SPECTRUM — DATE

JENSON J. SANTOS LICENSED PROFESSIONAL ENGINEER No. 14286-E HAWAII, U.S.A.

This work was prepared by me or under my supervision. Unauthorized alteration of this work is prohibited. (Sections) of construction plans may be prepared by licensed Professional Engineers, Architects, Surveyors, and Landscape Architects as allowed by state law.

4/30/24
Date of Signature
Expiration Date of the License

NOTE: Contractor to check and verify dimensions at job before proceeding with work.

REVISION	DATE	DESCRIPTION	MADE BY	APPROVED

PROJECT:
DEPARTMENT OF HAWAIIAN HOME LANDS
SITE AND INFRASTRUCTURE IMPROVEMENTS
FOR HANAPĒPĒ RESIDENTIAL LOTS, PHASE 2
TMK: (4) 1-8-007: 003 (PORTION) & (4) 2-8-007: 001 TO 050 (PORTION)
Hanapēpē, Waimea, Kaua'i, Hawai'i

ELECTRICAL LAYOUT DETAILS

THIS DOCUMENT CONTAINS INFORMATION PROPRIETARY TO SSFM INTERNATIONAL, INC. AND IS FURNISHED IN CONFIDENCE FOR THE LIMITED PURPOSE OF EVALUATION, BIDDING OR REVIEW. THIS DOCUMENT OR ITS CONTENTS MAY NOT BE USED FOR ANY OTHER PURPOSE AND MAY NOT BE REPRODUCED OR DISCLOSED TO OTHERS WITHOUT THE PRIOR WRITTEN CONSENT OF SSFM INTERNATIONAL, INC.

DATE
NOVEMBER 2022

SHEET NUMBER
E-400

102 OF 109 SHEETS

2022-10-27 7:58 AM Z:\Acad\PROJECTS\218718\E400_97_218718_Elec Layout Plan

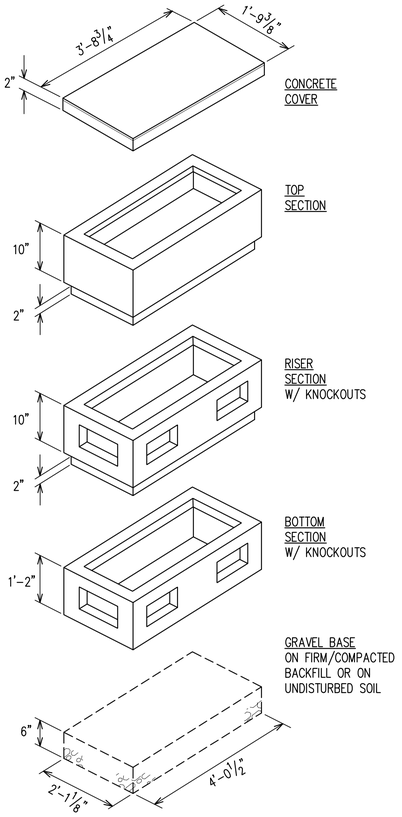

NOTES:

1. CONTACT KIUC ENG. DEPT. FOR DETAILED DRAWINGS.
2. ALL HANDHOLES SHALL BE WALKER INDUSTRIES TYPE OR APPROVED EQUAL. CONTACT KIUC INSPECTOR AT 246-2323 PRIOR TO ORDERING.

1 E-401 2' X 4' PRECAST KIUC PULLBOX DETAIL

NOT TO SCALE

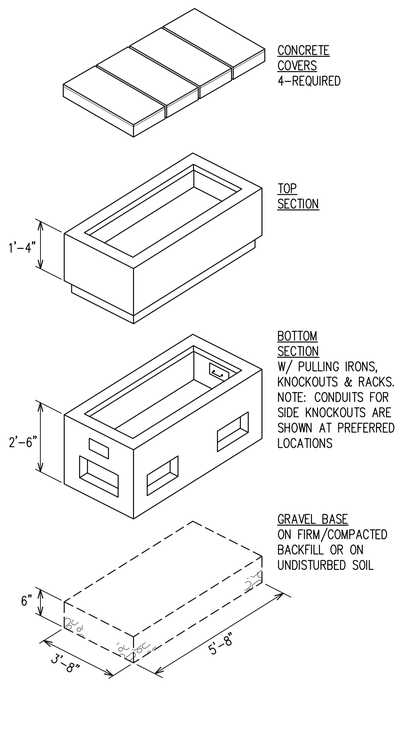

NOTES:

1. CONTACT KIUC ENG. DEPT. FOR DETAILED DRAWINGS.
2. ALL HANDHOLES SHALL BE WALKER INDUSTRIES TYPE OR APPROVED EQUAL. CONTACT KIUC INSPECTOR AT 246-2323 PRIOR TO ORDERING.

2 E-401 3' X 5' PRECAST KIUC HANDHOLE DETAIL

NOT TO SCALE

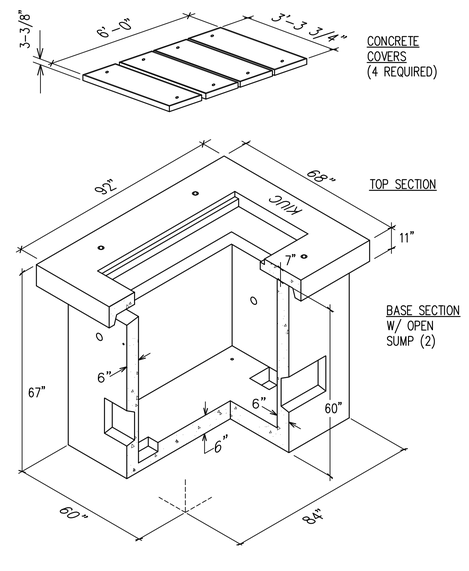

NOTES:

1. CONTACT KIUC ENG. DEPT. FOR DETAILED DRAWINGS.
2. ALL HANDHOLES SHALL BE WALKER INDUSTRIES TYPE OR APPROVED EQUAL. CONTACT KIUC INSPECTOR AT 246-2323 PRIOR TO ORDERING.

3 E-401 4' X 6' X 4'-6" DEEP KIUC PRECAST HANDHOLE DETAIL

NOT TO SCALE

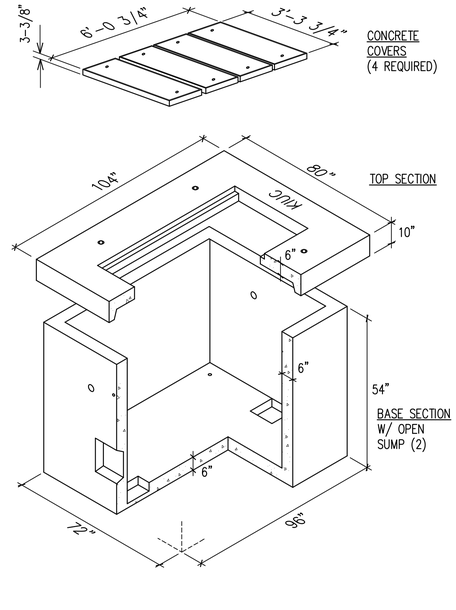

NOTES:

1. CONTACT KIUC ENG. DEPT. FOR DETAILED DRAWINGS.
2. ALL HANDHOLES SHALL BE WALKER INDUSTRIES TYPE OR APPROVED EQUAL. CONTACT KIUC INSPECTOR AT 246-2323 PRIOR TO ORDERING.

4 E-401 5' X 7' X 5'-5" DEEP KIUC PRECAST HANDHOLE DETAIL

NOT TO SCALE

JENSON J. SANTOS
LICENSED PROFESSIONAL ENGINEER
No. 14286-E
HAWAII, U.S.A.

This work was prepared by me or under my supervision. Engineer's Seal to be affixed prior to construction. Electronic seal or electronic signature is not valid. Licensed Professional Engineers, Architects, Surveyors, and Landscape Architects shall not alter this document.

Signature 4/30/24 Date

NOTE: Contractor to check and verify dimension at job before proceeding with work. Do not scale drawings. Any discrepancies shall be reported to the Engineer. Use only the latest revision of this issue.

REVISION	DATE	DESCRIPTION	MADE BY	APPROVED

PROJECT:
DEPARTMENT OF HAWAIIAN HOME LANDS
SITE AND INFRASTRUCTURE IMPROVEMENTS
FOR HANAPĒPĒ RESIDENTIAL LOTS, PHASE 2
TMK: (4) 1-8-007: 003 (PORTION) & (4) 2-8-007: 001 TO 050 (PORTION)
Hanapēpē, Waimea, Kaua'i, Hawai'i

KIUC HANDHOLE DETAILS 1

THIS DOCUMENT CONTAINS INFORMATION PROPRIETARY TO SSFM INTERNATIONAL, INC., AND IS FURNISHED IN CONFIDENCE FOR THE LIMITED PURPOSE OF EVALUATION, BIDDING OR REVIEW. THIS DOCUMENT OR ITS CONTENTS MAY NOT BE USED FOR ANY OTHER PURPOSE AND MAY NOT BE REPRODUCED OR DISCLOSED TO OTHERS WITHOUT THE PRIOR WRITTEN CONSENT OF SSFM INTERNATIONAL, INC.

DATE
NOVEMBER 2022

SHEET NUMBER
E-401

2022-11-07 9:05 AM Z:\Acad\PROJECTS\218718\E401_08_218718_KIUC HH Dets 1

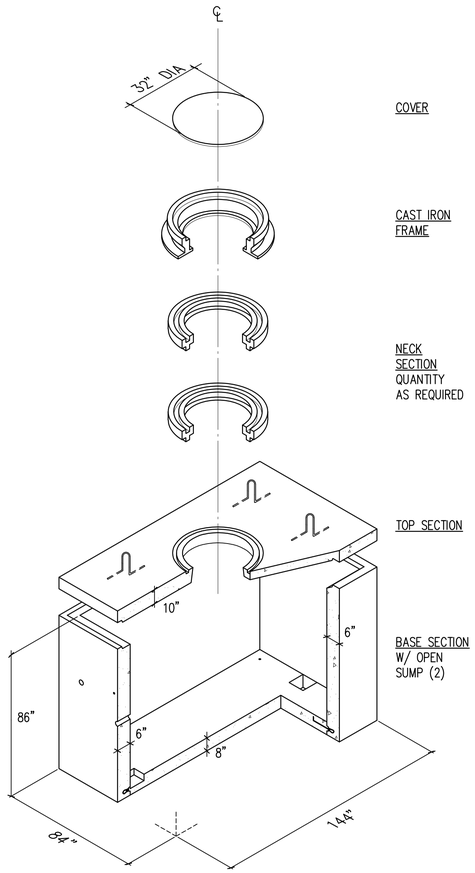

NOTES:

1. CONTACT KIUC ENG. DEPT. FOR DETAILED DRAWINGS.
2. ALL MANHOLES SHALL BE WALKER INDUSTRIES TYPE OR APPROVED EQUAL. CONTACT KIUC INSPECTOR AT 246-2323 PRIOR TO ORDERING.

1 E-402 6' X 11' X 6'-6" DEEP KIUC PRECAST MANHOLE DETAIL

NOT TO SCALE

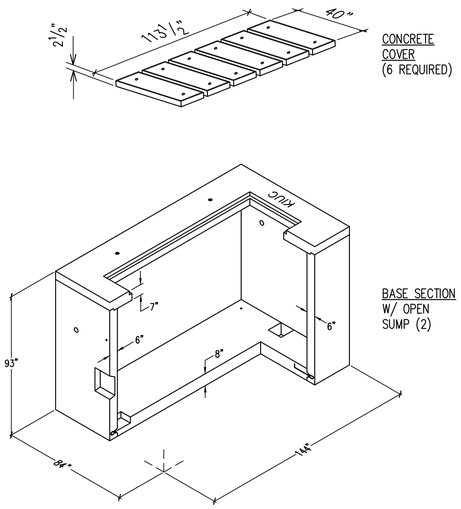

NOTES:

1. CONTACT KIUC ENG. DEPT. FOR DETAILED DRAWINGS.
2. ALL HANDHOLES SHALL BE WALKER INDUSTRIES TYPE OR APPROVED EQUAL. CONTACT KIUC INSPECTOR AT 246-2323 PRIOR TO ORDERING.

2 E-402 6' X 11' KIUC PRECAST HANDHOLE DETAIL

NOT TO SCALE

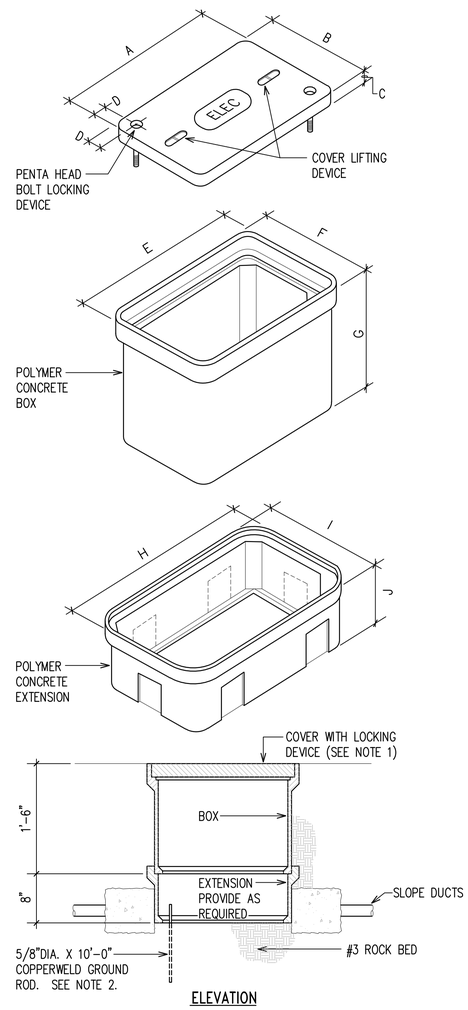

ELEVATION

3 E-402 NON-CONCRETE SECONDARY POWER PULLBOX DETAIL

NOT TO SCALE

NON-CONCRETE BOX SCHEDULE			
ITEM	13" X 24" PULLBOX	17" X 30" PULLBOX	24" X 36" PULLBOX
A	$23\frac{1}{4}$	$30\frac{1}{2}$	$35\frac{5}{8}$
B	$13\frac{3}{4}$	$17\frac{1}{2}$	24
C	2	2	3
D	$1\frac{3}{4}$	$2\frac{1}{2}$	$2\frac{3}{4}$
E	$24\frac{1}{2}$	$31\frac{3}{4}$	$36\frac{7}{8}$
F	15	$18\frac{3}{4}$	$25\frac{1}{4}$
G	18	18	18
H	$29\frac{1}{4}$	$36\frac{1}{2}$	$41\frac{7}{8}$
I	$19\frac{3}{4}$	$23\frac{1}{2}$	$30\frac{1}{4}$
J	9	9	9

NOTE: ALL DIMENSIONS ARE IN INCHES & ARE NOMINAL.

NOTES:

1. TO PROPERLY SECURE THE COVER, BE SURE THAT THE PENTAHEAD BOLTS ARE IN PLACE AND TIGHTENED. THE PENTA BOLTS SHALL BE FASTENED SECURELY TO THE COVERS (BY MEANS OF A COTTER PIN, FOR EXAMPLE), SO THE BOLTS CANNOT BE EASILY REMOVED FROM THE COVERS, EVEN WHEN THE COVERS ARE REMOVED FROM THE BOXES.
2. GROUND ROD SHALL BE INSTALLED IN THE CORNER, 6" FROM EACH WALL AND 6" ABOVE FINAL FLOOR GRADE.
3. NON-CONCRETE BOXES, COVERS, AND EXTENSIONS SHALL BE RATED FOR A VERTICAL LOAD OF 20,000 LBS (20K) MINIMUM.

APPROVED BY:

KAUA'I ISLAND UTILITY COOPERATIVE — DATE

HAWAIIAN TELCOM — DATE

SPECTRUM — DATE

JENSON J. SANTOS LICENSED PROFESSIONAL ENGINEER No. 14286-E HAWAII, U.S.A.

This work was prepared by me or under my supervision. Engineering Division, Department of Public Works, County of Kaua'i, State of Hawai'i. Professional Engineers, Architects, Surveyors, and Landscape Architects Law, Chapter 464.

4/30/24

NOTE: Contractor to check and verify dimension at job before proceeding with work. Any discrepancy shall be reported to the engineer.

REVISION	DATE	DESCRIPTION	MADE BY	APPROVED

PROJECT:
DEPARTMENT OF HAWAIIAN HOME LANDS
SITE AND INFRASTRUCTURE IMPROVEMENTS
FOR HANAPĒPĒ RESIDENTIAL LOTS, PHASE 2
TMK: (4) 1-8-007: 003 (PORTION) & (4) 2-8-007: 001 TO 050 (PORTION)
Hanapēpē, Waimea, Kaua'i, Hawai'i

KIUC HANDHOLE DETAILS 2

THIS DOCUMENT CONTAINS INFORMATION PROPRIETARY TO SSFM INTERNATIONAL, INC. AND IS FURNISHED IN CONFIDENCE FOR THE LIMITED PURPOSE OF EVALUATION, BIDDING OR REVIEW. THIS DOCUMENT OR ITS CONTENTS MAY NOT BE USED FOR ANY OTHER PURPOSE AND MAY NOT BE REPRODUCED OR DISCLOSED TO OTHERS WITHOUT THE PRIOR WRITTEN CONSENT OF SSFM INTERNATIONAL, INC.

DATE
NOVEMBER 2022

SHEET NUMBER
E-402

104 OF 109 SHEETS

2022-10-27 7:59 AM Z:\Kaua'i\PROJECTS\218171B\E402_99_218171B_KIUC HH Dets 2

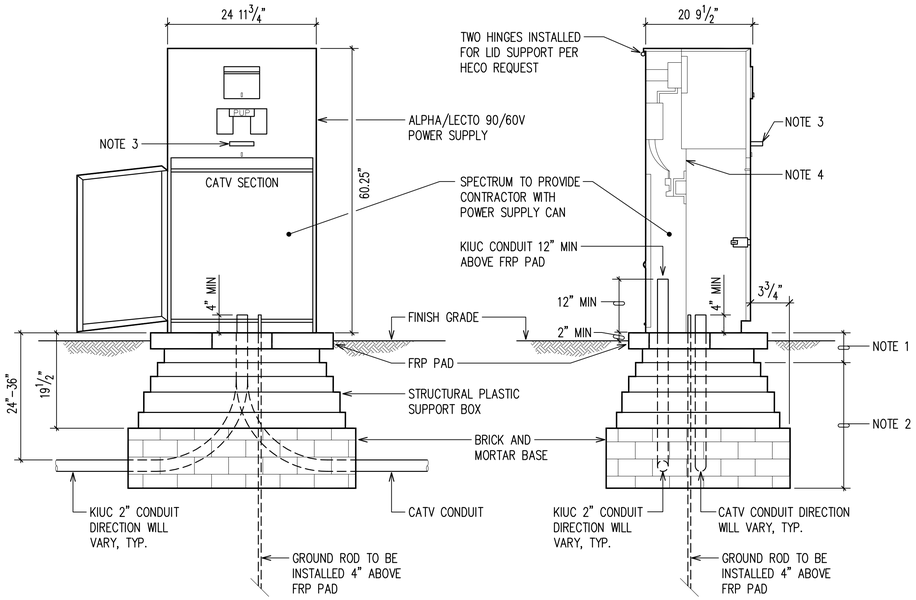

FRONT ELEVATION

SIDE ELEVATION

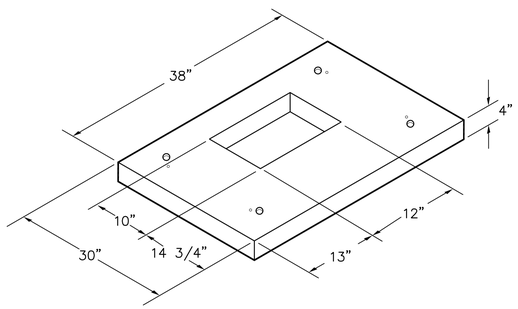

FRP PAD

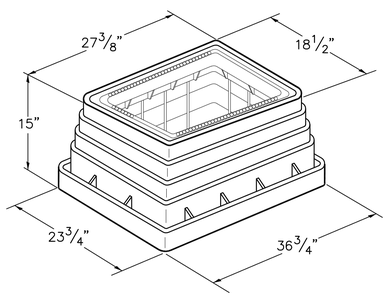

STRUCTURAL PLASTIC SUPPORT BOX

NOTE(S):

1. FILL REMAINING AREA OF PLASTIC SUPPORT BOX WITH CONCRETE AFTER PEDESTAL HAS BEEN BOLTED IN PLACE. CONCRETE SHOULD BE FLUSH WITH THE TOP OF THE FRP PAD PER KIUC'S REQUIREMENTS..
2. FILL BOX AND PLASTIC SUPPORT BOX WITH SAND UP TO THIS LEVEL BEFORE INSTALLATION OF PEDESTAL.
3. HANDLE INSTALLED FROM METER READER PER KIUC'S REQUEST.
4. BUILT IN PLATE SEPARATING HECO'S AND SPECTRUM'S EQUIPMENT PER KIUC'S REQUIREMENTS.
5. MATERIAL CONSTRUCTION / INSTALLATION OF ALL METERING FACILITIES AND ASSOCIATED EQUIPMENT SHALL MEET KIUC'S REQUIREMENTS (LATEST REVISION, NEC AND EUSERC).

NOTE: MATERIAL CONSTRUCTION/INSTALLATION OF ALL METERING FACILITIES AND ASSOCIATED EQUIPMENT SHALL MEET REQUIREMENTS OF HECO'S ESIM (LATEST REVISION), NEC AND EUSERC 308. CONTRACTOR TO VERIFY ALL MATERIAL CONSTRUCTION/INSTALLATION REQUIREMENTS WITH HECO AND SPECTRUM PRIOR TO ROUGHING IN.

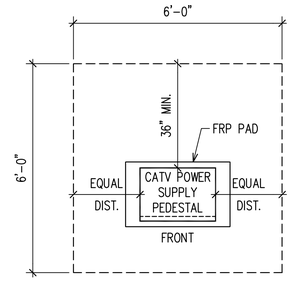

EASEMENT SITE PLAN

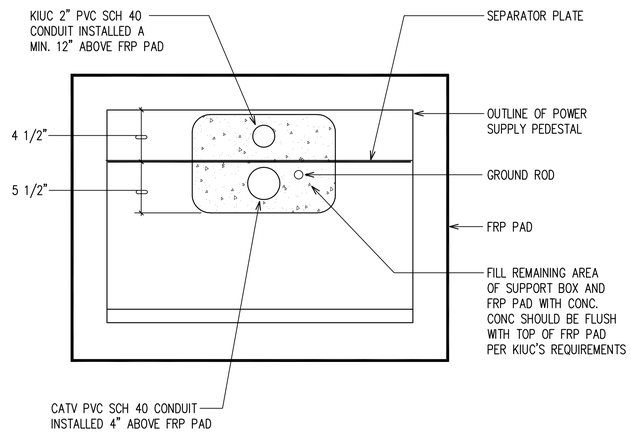

TOP VIEW OF FRP PAD

CONSTRUCTION NOTE(S):

1. GROUND ROD IS TO BE INSTALLED ON THE USER SIDE, NOT LINE SIDE OF PEDESTAL. TOP OF THE GROUND ROD TO BE 4" ABOVE THE TOP OF THE CATV CONCRETE PAD AND LOCATED ON THE CATV SIDE.
2. CUSTOMER LINE SIDE CONDUIT SHOULD BE PLACED 12" MIN. ABOVE CONCRETE PAD PER HECO'S REQUIREMENTS
3. CATV DUCT TO BE LOCATED ON THE CATV SIDE OF THE PEDESTAL AND TO BE 4" ABOVE THE CONCRETE PAD.
4. MINIMUM 6" TYPE "3B" OR EQUIVALENT (SPECTRUM INSPECTOR APPROVED) FOR LEVELING OR RAISING OF PRE-CAST BASE. SPACING BETWEEN BASE, TIER, OR PAD SECTIONS NOT PERMITTED.
5. PLACE POWER SUPPLY PAD ON THE BOX. PLACE POWER SUPPLY PEDESTAL ON CONCRETE PAD. BARRIER – TYPE/BUTYL OR OTHER APPROVED NON-METALLIC SPACER WITH WATERPROOF CAULKING.
6. FILL SUPPORT BOX WITH SAND 4" FROM THE TOP.
7. FILL REMAINING OPEN SPACE OF TYPE "B" SUPPORT BOX AND CONCRETE PAD WITH CONCRETE AFTER PEDESTAL IS ATTACHED. CONCRETE SHOULD BE FLUSH WITH TOP OF CONCRETE PAD.
8. LOCATION OF CONDUITS FOR BOTH CATV AND CUSTOMER LINE SIDE WILL VARY WITHIN OPEN AREA ACCORDING TO LOCATION AND DIRECTION OF THE CONDUIT SOURCE.
9. CUSTOMER LINE FEEDER WILL BE SINGLE PHASE 220V FEEDER SIZE WILL BE MINIMUM #2 SOLID CONDUCTORS FOR RUNS LESS THAN 250'.
10. CUSTOMER LINE SERVICE CONDUCTORS SEPARATED BY SUITABLE BARRIERS FROM THE CUSTOMER'S LOAD CONDUCTORS. CUSTOMER'S LOAD CONDUCTORS DO NOT PASS THROUGH LINE SIDE SEALABLE SECTIONS OR COMPARTMENTS.
11. PROVIDE A PERMANENT IDENTIFICATION LABEL/PLACARD TO IDENTIFY SPACE BEING SUPPLIED. LABEL MATERIAL AND LETTERING REQUIREMENTS TO ADHERE TO LATEST EDITION OF HECO ESIM (ELECTRONIC SERVICE INSTALLATION MANUAL)
12. GROUND AND BOND PER NEC.
13. GROUNDING SHALL NOT BE WITHIN UTILITY COMPARTMENT/SECTION.
14. PROVIDE A MINIMUM OF 4 FEET CLEAR AND LEVEL WORKSPACE IN FRONT OF METERING SERVICE EQUIPMENT.
15. AT TIME OF INSTALLATION, PROVIDE AND INSTALL METER SOCKET COVERS (PLASTIC) AND BANDS FOR ALL PLANK METER SOCKETS. IDENTIFY COVERS SO COVERS CAN BE RETURNED.
16. CONTRACTOR IS RESPONSIBLE FOR ENSURING ALL DETAILS, EQUIPMENT, MATERIALS AND RELATED ITEMS ON THIS PLAN ARE CURRENT WITH HECO AND CATV SPECIFICATIONS PRIOR TO ROUGHING IN. ALL CHANGES SHALL BE AT CONTRACTOR'S EXPENSE.
17. CONTRACTOR IS RESPONSIBLE FOR HECO SERVICE REQUEST AND ALL CATV/HECO INSPECTION AND INSTALLATION COORDINATION.

HECO SERVICE REQUEST INFORMATION:
* TYPE OF SERVICE: 100A, UNDERGROUND, ALL ELECTRIC
* VOLTAGE: SINGLE PHASE, 3 WIRE, 120/240
* LOAD: 12KVA

1 E-403 CATV POWER SUPPLY PEDESTAL DETAILS
NOT TO SCALE

APPROVED BY:

KAUA'I ISLAND UTILITY COOPERATIVE DATE

JENSON J. SANTOS
LICENSED PROFESSIONAL ENGINEER
No. 14286-E
HAWAII, U.S.A.

This work was prepared by me or under my supervision. Date of construction plan completion: 4/30/24. Jenson J. Santos, Professional Engineer, Architect, Surveyor, and Landscape Architect, State of Hawaii. License expires on the last day of the month of birth in the even numbered year following the date of the license.

NOTE: Contractor to check and verify dimension at job before proceeding with work.

REVISION	DATE	DESCRIPTION	MADE BY	APPROVED

PROJECT:
DEPARTMENT OF HAWAIIAN HOME LANDS
SITE AND INFRASTRUCTURE IMPROVEMENTS
FOR HANAPĒPĒ RESIDENTIAL LOTS, PHASE 2
TMK: (4) 1-8-007: 003 (PORTION) & (4) 2-8-007: 001 TO 050 (PORTION)
Hanapēpē, Waimea, Kaua'i, Hawai'i

CATV POWER SUPPLY DETAILS

THIS DOCUMENT CONTAINS INFORMATION PROPRIETARY TO SSFM INTERNATIONAL, INC. AND IS FURNISHED IN CONFIDENCE FOR THE LIMITED PURPOSE OF EVALUATION, BIDDING OR REVIEW. THIS DOCUMENT OR ITS CONTENTS MAY NOT BE USED FOR ANY OTHER PURPOSE AND MAY NOT BE REPRODUCED OR DISCLOSED TO OTHERS WITHOUT THE PRIOR WRITTEN CONSENT OF SSFM INTERNATIONAL, INC.

DATE
NOVEMBER 2022

SHEET NUMBER
E-403

105 OF 109 SHEETS

2022-11-07 9:01 AM Z:\Kaua'i\PROJECTS\218171B\403_100_218171B_CATV Pwr Supply Dets

NOTES:

1. LED LIGHT FIXTURE SUBMITTED SHALL BE SUBJECT TO APPROVAL BY THE COUNTY, AND SHALL MEET THE CITY'S CURRENT STANDARDS FOR LED STREET LIGHTING. LED LUMINAIRE SHALL BE FULL-CUTOFF TYPE WITH IES TYPE III DISTRIBUTION, LED LUMINAIRES:
   -37W (ERL1-0-05-D5-30-A-GRAY-B-Y)
   -46W (ERL1-0-06-B5-30-A-GRAY-B-Y)

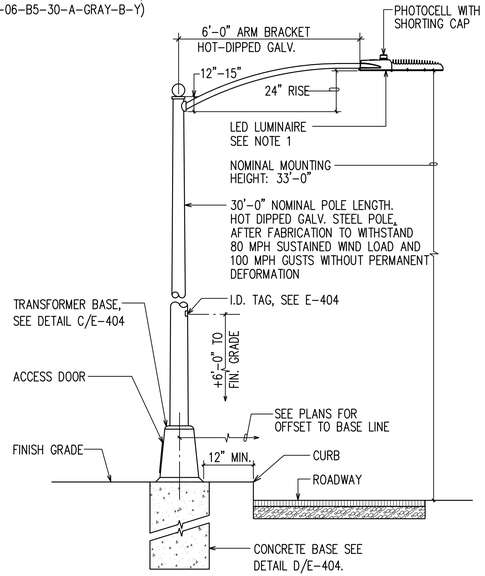

ELEVATION

A E-404 STREET LIGHT STANDARD
NOT TO SCALE

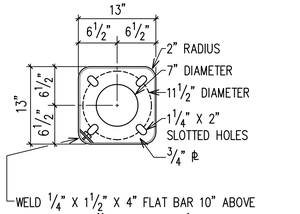

TOP VIEW

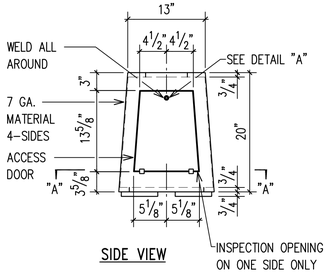

SIDE VIEW

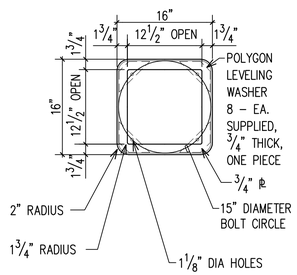

SECTION "A-A"

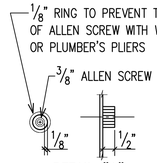

DETAIL "A"

NOTES:

1. ALL STEEL SHALL CONFORM TO REQUIREMENTS OF ASTM A36 STEEL.
2. ALL WELDS SHALL BE PERFORMED BY A CERTIFIED WELDER.
3. BOLTS FOR BOLTING POLE FLANGE INCLUDING 4-1" X 4" HEX. BOLT WITH NUT & WASHER SHALL BE HOT-DIPPED GALV.
4. ENTIRE ASSEMBLY SHALL BE HOT-DIPPED GALV. AFTER FABRICATION.

C E-404 TRANSFORMER BASE DETAIL
NOT TO SCALE

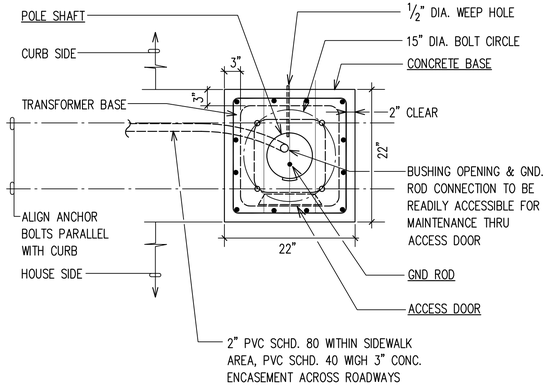

B E-404 CONCRETE BASE PLAN
NOT TO SCALE

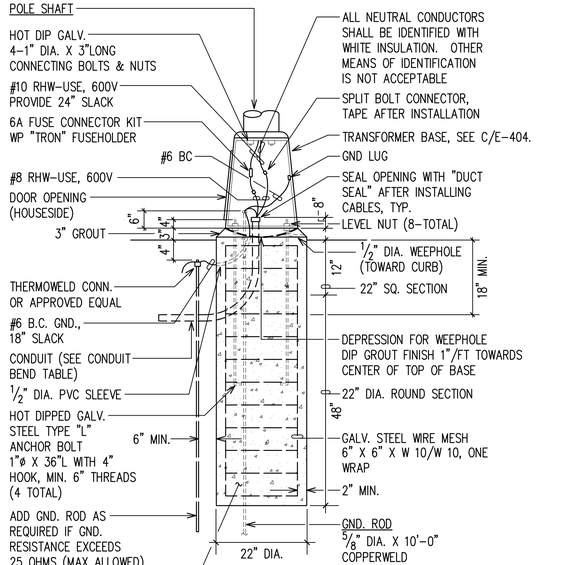

PVC SCHEDULE 40 OR 80 ELBOW				
NOMINAL CONDUIT SIZE	1¼"	1½"	2"	3"
MINIMUM RADIUS BEND	8"	10"	12"	18"

NOTE: SEE DET B/E-404.

D E-404 CONCRETE BASE ELEVATION
NOT TO SCALE

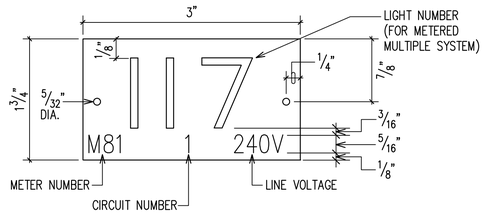

NOTES:

1. USE 2 PLY LAMINATED FLEXIBLE PLASTIC BLACK-WHITE. THICKNESS: BLACK CAP SHEET-0.010", WHITE BASE SHEET-0.052".
2. NUMBER SIZE SHALL BE 1" HIGH AND ENGRAVED ⅛" WIDE, WHITE IN COLOR (NUMBER AS REQUIRED).
3. NOMENCLATURE SIZE SHALL BE 5/16" HIGH AND ENGRAVED 1/32" WIDE, WHITE IN COLOR (METER NUMBER, CIRCUIT NUMBER AND VOLTAGE AS REQUIRED).
4. ATTACH TO ALUMINUM AND STEEL POLES WITH NO. 8 STAINLESS STEEL, ½" LONG DRIVE SCREWS IN ⅛" DRILL HOLE. ATTACH TO WOOD POLES WITH 4D ALUMINUM NAILS.
5. NUMBERS ARE INSCRIBED BY CUTTING THROUGH "BLACK CAP SHEET" TO EXPOSE "WHITE LETTERS".
6. ASSIGN CIRCUIT NUMBER FOR SYSTEMS WITH TWO OR MORE CIRCUITS (LETTER INDICATES PANEL BOARD, NUMBER INDICATES CIRCUIT).

E E-404 STREET LIGHT I.D. TAG DETAIL
NOT TO SCALE (METERED SYSTEM)

NOTES:

1. LIGHTING STANDARD SHALL BE DESIGNED IN ACCORDANCE WITH AASHTO "STANDARD SPECIFICATIONS FOR STRUCTURAL SUPPORTS FOR HIGHWAY SIGNS, LUMINAIRES AND TRAFFIC SIGNALS", 4TH EDITION DATED 2001 WITH 2002 INTERIM REVISIONS. LIGHT STANDARD AND BRACKET ARM ASSEMBLY SHALL WITHSTAND 105 MPH SUSTAINED WINDS WITH 1.14 GUST FACTOR WITHOUT PERMANENT DEFORMATION.

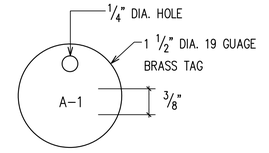

NOTES:

1. NUMBER SIZE SHALL BE ⅜" HIGH AND PUNCHED ON BRASS TAG.
2. ATTACH TO CIRCUIT CABLES WITH NYLON WEATHER RESISTANT LOCKING CABLE TIES, 3/16" WIDE.

F E-404 STREET LIGHT CIRCUIT CABLE I.D. TAG DETAIL
NOT TO SCALE

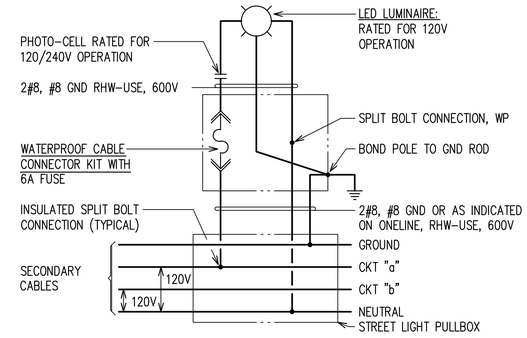

NOTE: ALL NEUTRAL CONDUCTORS SHALL BE IDENTIFIED WITH SOLID WHITE INSULATION. OTHER MEANS OF IDENTIFICATION ARE NOT ACCEPTABLE.

G E-404 STREET LIGHT CONNECTION DIAGRAM
(METERED SYSTEM)

JENSON J. SANTOS LICENSED PROFESSIONAL ENGINEER No. 14286-E HAWAII, U.S.A.

This work was prepared by me or under my supervision. Date expiration of certificate is 4/30/24. Pages or sheets covered by this seal: All of the Issue

4/30/24

NOTE: Contractor to check and verify dimension at job before proceeding with work.

REVISION	DATE	DESCRIPTION	MADE BY	APPROVED

PROJECT:
DEPARTMENT OF HAWAIIAN HOME LANDS
SITE AND INFRASTRUCTURE IMPROVEMENTS
FOR HANAPĒPĒ RESIDENTIAL LOTS, PHASE 2
TMK: (4) 1-8-007: 003 (PORTION) & (4) 2-8-007: 001 TO 050 (PORTION)
Hanapēpē, Waimea, Kaua'i, Hawai'i

STREET LIGHT DETAILS

THIS DOCUMENT CONTAINS INFORMATION PROPRIETARY TO SSFM INTERNATIONAL, INC. AND IS FURNISHED IN CONFIDENCE FOR THE LIMITED PURPOSE OF EVALUATION, BIDDING OR REVIEW. THIS DOCUMENT OR ITS CONTENTS MAY NOT BE USED FOR ANY OTHER PURPOSE AND MAY NOT BE REPRODUCED OR DISCLOSED TO OTHERS WITHOUT THE PRIOR WRITTEN CONSENT OF SSFM INTERNATIONAL, INC.

DATE
NOVEMBER 2022

SHEET NUMBER
E-404
106 OF 109 SHEETS

2022-10-27 8:02 AM Z:\Acad\PROJECTS\218171B\E404_101_218171B_St Lt Dets

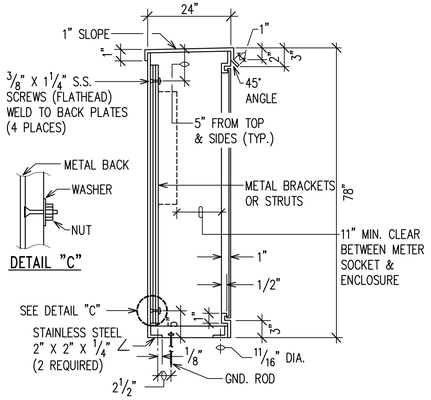

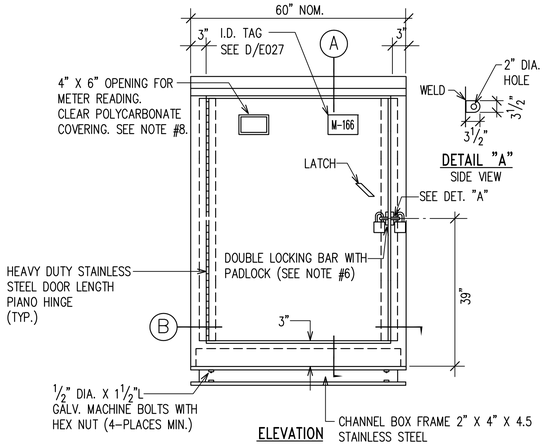

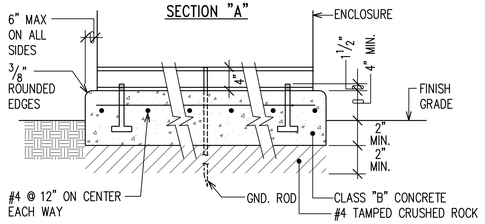

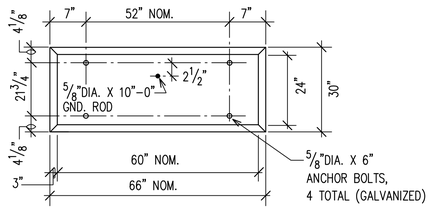

NOTES:

1. CABINET TO BE PRIMED WITH ONE COAT SHOP PRIMER.
2. EQUIPMENT TO BE MOUNTED WITHIN ENCLOSURE BY METAL BRACKETS OR METAL STRUTS.
3. MADE FROM 10 GAUGE TYPE 316 STAINLESS STEEL.
4. PROVIDE ACRYLIC ENAMEL FINISH, COLOR TO MATCH TRANSFORMER. (2 COATS)
5. ENCLOSURE SHALL BE NEMA 3R WITH NEOPRENE GASKETING.
6. PADLOCKS:
   1 – HECO FURNISHED
   1 – CONTRACTOR FURNISHED, BRASS CORBIN SESAMEE COMBINATION
7. SHOP FABRICATION DRAWINGS SHALL BE SUBMITTED FOR APPROVAL.
8. LOCATION OF OPENING FOR METER READER TO CORRESPOND WITH LOCATION OF METER (CENTER OPENING WITH METER SOCKET).
9. MAINTAIN 4'–0" MIN. CLEARANCE FRONTING CABINET DOOR, UNLESS INDICATED OTHERWISE.
10. SEE DETAIL C/E–405 FOR ELEVATION DETAIL.

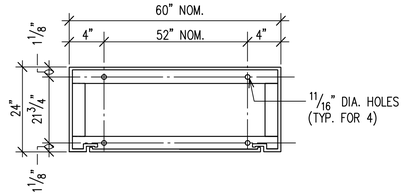

A STREET LIGHT COMBINATION METER AND EQUIPMENT CABINET
E–405 NOT TO SCALE

NOTES:

1. STREET LIGHT ONE–LINE DIAGRAM.
2. EQUIPMENT TO BE MOUNTED WITHIN ENCLOSURE BY METAL BRACKETS OR METAL STRUTS.

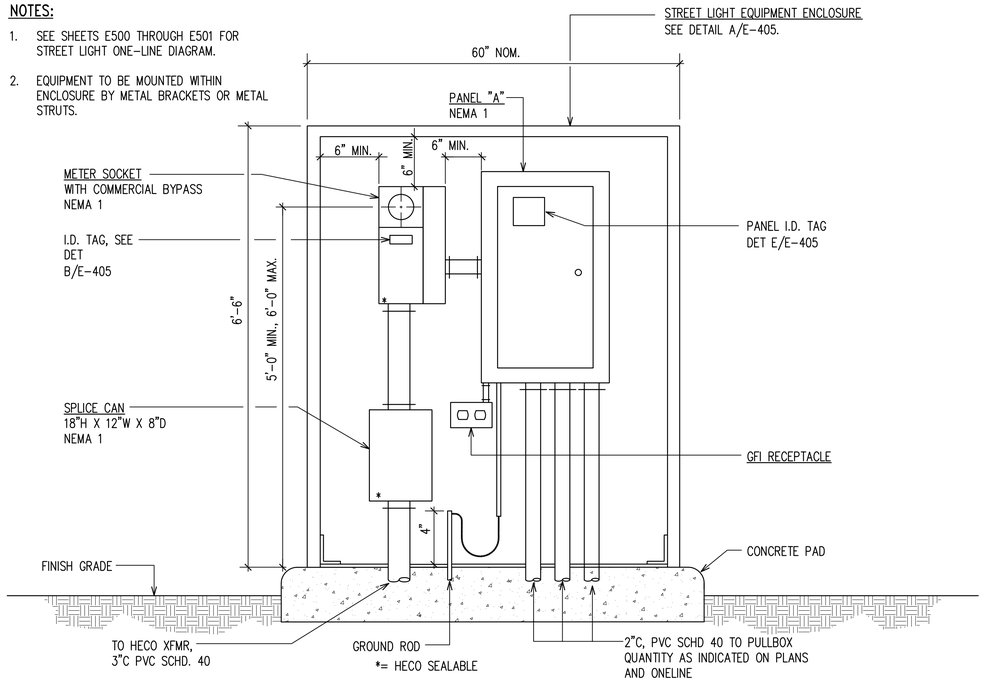

C STREET LIGHTING SERVICE ELEVATION
E–405 NOT TO SCALE

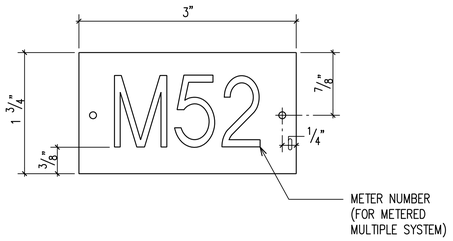

NOTE(S):

1. USE 2 PLY PLASTIC – BLACK, WHITE.
2. NUMBER SIZE SHALL BE 1" HIGH AND ENGRAVED 1/8" WIDE, WHITE IN COLOR (NUMBER AS REQUIRED).
3. ATTACH TO METER ENCLOSURE WITH NO. 7 STAINLESS STEEL DRIVE SCREWS.

D METER ENCLOSURE I.D. TAG DETAIL – METERED SYSTEM
E–405 NOT TO SCALE

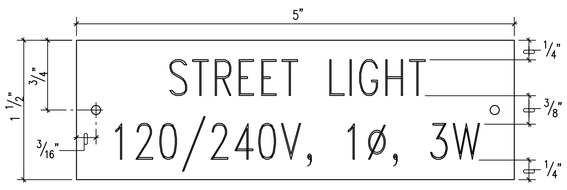

NOTES:

1. USE 2 PLY PLASTIC – BLACK, WHITE
2. STREET LIGHT LETTERS SHALL BE 3/8" HIGH AND ENGRAVED 1/16" WIDE, WHITE IN COLOR.
3. 120/240V, 1ø, 3W LETTERS AND NUMBERS SHALL BE 1/4" HIGH AND ENGRAVED 1/32" WIDE, WHITE IN COLOR.
4. ATTACH TO METER ENCLOSURE WITH NO. 7 STAINLESS STEEL DRIVE SCREWS.

B METER SOCKET I.D. TAG DETAIL
E–405 NOT TO SCALE

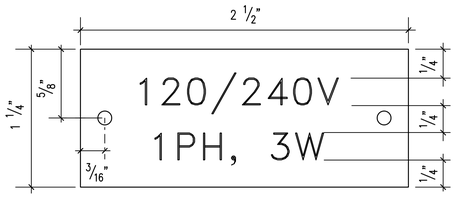

NOTES:

1. USE 2 PLY PLASTIC – BLACK, WHITE.
2. LETTER SIZE SHALL BE 1/8" HIGH AND ENGRAVED 1/32" WIDE, WHITE IN COLOR.
3. ATTACH TO PANEL WITH NO. 7 STAINLESS STEEL DRIVE SCREWS.

E PANEL I.D. TAG DETAIL
E–405 NOT TO SCALE

JENSON J. SANTOS LICENSED PROFESSIONAL ENGINEER No. 14286-E HAWAII, U.S.A.

This work was prepared by me or under my supervision. Date of construction documents: 4/30/24. Jenson J. Santos, Professional Engineer, Architects, Surveyors, and Landscape Architects, State of Hawai'i. License expires on the last day of this month. Signature: [signature] 4/30/24

NOTE: Contractor to check and verify dimensions at job before proceeding with work.

REVISION	DATE	DESCRIPTION	MADE BY	APPROVED

PROJECT:
DEPARTMENT OF HAWAIIAN HOME LANDS
SITE AND INFRASTRUCTURE IMPROVEMENTS
FOR HANAPĒPĒ RESIDENTIAL LOTS, PHASE 2
TMK: (4) 1-8-007: 003 (PORTION) & (4) 2-8-007: 001 TO 050 (PORTION)
Hanapēpē, Waimea, Kaua'i, Hawai'i

STREET LIGHT EQUIPMENT DETAILS

THIS DOCUMENT CONTAINS INFORMATION PROPRIETARY TO SSFM INTERNATIONAL, INC. AND IS FURNISHED IN CONFIDENCE FOR THE LIMITED PURPOSE OF EVALUATION, BIDDING OR REVIEW. THIS DOCUMENT OR ITS CONTENTS MAY NOT BE USED FOR ANY OTHER PURPOSE AND MAY NOT BE REPRODUCED OR DISCLOSED TO OTHERS WITHOUT THE PRIOR WRITTEN CONSENT OF SSFM INTERNATIONAL, INC.

DATE
NOVEMBER 2022

SHEET NUMBER
E-405

107 OF 109 SHEETS

2022-10-27 8:03 AM Z:\Acad\PROJECTS\218171\E405_102_218171B_JS Enc Det

GENERAL NOTES:

1. CONDUCTORS TO BE RHW-USE, 600V WITH OUTER COVERING.
2. ALL NEUTRAL CONDUCTORS SHALL BE IDENTIFIED WITH WHITE INSULATION. OTHER MEANS OF IDENTIFICATION ARE NOT ACCEPTABLE.
3. CONTRACTOR SHALL IDENTIFY ALL CIRCUIT CONDUCTORS WITH BRASS TAGS IN EACH PULLBOX, SEE DET F/E-404.
4. CONDUIT-PVC SCHD 80 DIRECT BURIED AT SIDEWALK; PVC SCHD 40 WITH 3" CONC JACKET AT ROAD CROSSINGS.
5. SEE ST LT CONNECTION DIAGRAM FOR WIRING AT ST LT STD, G/E-404.
6. AT TIME OF INSTALLATION, PROVIDE AND INSTALL METER SOCKET COVERS (PLASTIC) AND BANDS FOR ALL BLANK METER SOCKETS. IDENTIFY COVERS SO COVERS CAN BE RETURNED.
7. PROVIDE PERMANENT IDENTIFICATION LABELS FOR ALL METER SOCKETS TO IDENTIFY THE UNIT OR SPACE SERVED.

STREET LIGHTING NOTES:

1. PRIMARY SERVICE CABLES AND CONNECTION TO KIUC TRANSFORMER SHALL BE PROVIDED BY KIUC AND PAID FOR BY CONTRACTOR (METERED SYSTEM), METER NO. M-000.
2. CONTRACTOR SHALL BE RESPONSIBLE FOR COORDINATING ALL WORK WITH KIUC.
3. CONTRACTOR TO NOTIFY & COORDINATE WORK WITH MECHANICAL/ELECTRICAL DIVISION, DEPARTMENT OF DESIGN & CONSTRUCTION, 3 WORKING DAYS IN ADVANCE OF COMMENCING INSTALLATION OF STREET LIGHT SYSTEM.
4. LUMINARIES TO BE LED TYPE GE-EVOLVE ERS1 OR ERS2 WITH I.E.S. TYPE III LIGHT DISTRIBUTION OR APPROVED EQUIVALENT. LUMINARIES TO HAVE A COLOR TEMPERATURE OF 3000K UNLESS OTHERWISE SPECIFIED. LUMINARIES ALONG ARTERIAL ROADS TO HAVE 4000K COLOR TEMPERATURE.
5. TYPICAL CONSTRUCTION DETAILS TO BE PER THIS SHEET & APPLICABLE STANDARD DETAILS OF THE MECHANICAL/ELECTRICAL DIVISION, DEPARTMENT OF DESIGN & CONSTRUCTION.
6. ON BOTTOM OF PHOTO-CELL, CONTRACTOR SHALL STENCIL THE DATE OF INSTALLATION.
7. LUMINAIRE & POLE COUNT:

POLES:	30'-0"	=	32
BASE:	TRANSFORMER	=	32
LUMINARIES:	37W LED	=	1
LUMINARIES:	46W LED	=	31

8. AT ALL TIMES DURING CONSTRUCTION PERIOD, CONTRACTOR SHALL MAINTAIN ONE SET OF APPROVED PLANS AT THE PROJECT SITE.
9. THE CONTRACTOR SHALL MEASURE AND RECORD THE GROUND RESISTANCE AT EACH STANDARD WITH NO EXTERNAL GROUND WIRES CONNECTED TO THE GROUND ROD. CONTRACTOR SHALL SCHEDULE GROUND RESISTANCE MEASUREMENTS 48 HOURS IN ADVANCE AND SHALL NOT PROCEED WITH MEASUREMENTS UNTIL APPROVAL IS GRANTED. SCHEDULES ARE SUBJECT TO CHANGE DEPENDING UPON WEATHER CONDITIONS. REPORTS SHALL INCLUDE NAME OF PERSONNEL CONDUCTING THE TEST, METER TYPE AND SERIAL NUMBER, DATE OF TEST AND SOIL CONDITIONS. TEST RESULTS SHALL BE CERTIFIED BY THE CONTRACTOR AND SUBMITTED TO THE CITY AND COUNTY.
10. CONTRACTOR SHALL ARRANGE FOR KIUC TO ENERGIZE STREET LIGHTS A MINIMUM OF SIX HOURS BEFORE FINAL INSPECTION & ACCEPTANCE. CONTRACTOR TO PAY FOR ALL COSTS, 6 HOURS BEFORE AND DURING INSPECTION.
11. FINAL ACCEPTANCE AND INSPECTION WILL BE UNDERTAKEN ONLY AFTER ALL WORK HAS BEEN COMPLETED & THE "AS-BUILT" VELLUM TRACINGS HAVE BEEN RECEIVED BY THE COUNTY OF KAUA'I, DEPARTMENT OF DESIGN & CONSTRUCTION.
12. UPON COMPLETION OF FINAL INSPECTION BY ENGINEER & THE CITY AND COUNTY, CONTRACTOR SHALL OBTAIN WRITTEN ACCEPTANCE OF STREET LIGHT SYSTEM FROM THE MECHANICAL/ELECTRICAL DIVISION, DEPARTMENT OF DESIGN & CONSTRUCTION, CITY AND COUNTY.
13. CONTRACTOR SHALL NOT BACKFILL TRENCHES UNTIL WORK IS APPROVED BY THE STREET LIGHT INSPECTOR.
14. THE CONTRACTOR SHALL INFORM THE STREET LIGHT INSPECTOR OF ALL CONCRETE POURS AT LEAST 2 WORKING DAYS IN ADVANCE. CONCRETE SHALL NOT BE POURED UNTIL APPROVAL IS GRANTED BY THE CITY AND COUNTY STREET LIGHT INSPECTOR.
15. SUBMIT SHOP DRAWINGS FOR ALL STREET LIGHT COMPONENTS INCLUDING PULLBOXES FOR APPROVAL.

CONDUIT AND WIRING

ITEM	DESCRIPTION
1	3/4"C, 2#12, #12 GND
2	3"C, 2#1, #1 GND
3	3"C, 4#1, #1 GND
4	3"C, 6#1, #1 GND
5	3"C, 8#1, #1 GND

ONELINE DIAGRAM LEGEND

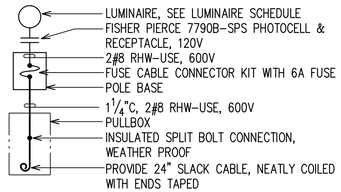

LUMINAIRE SCHEDULE

SYMBOL	WATTAGE	MODEL NUMBER
⊘	37W	ERL1-0-05-D5-30-A-GRAY-B-Y
○	46W	ERL1-0-06-B5-30-A-GRAY-B-Y

NOTE(S):

1. DUPLEX GFI RECEPTACLE NEMA 5-20R, WP
2. EXST 3"C STUBBED AND CAPPED
3. INTERCEPT EXST CONDUIT, PROVIDE COUPLINGS, AND EXTEND TO NEW PULLBOX. INSTALL PULLWIRE.

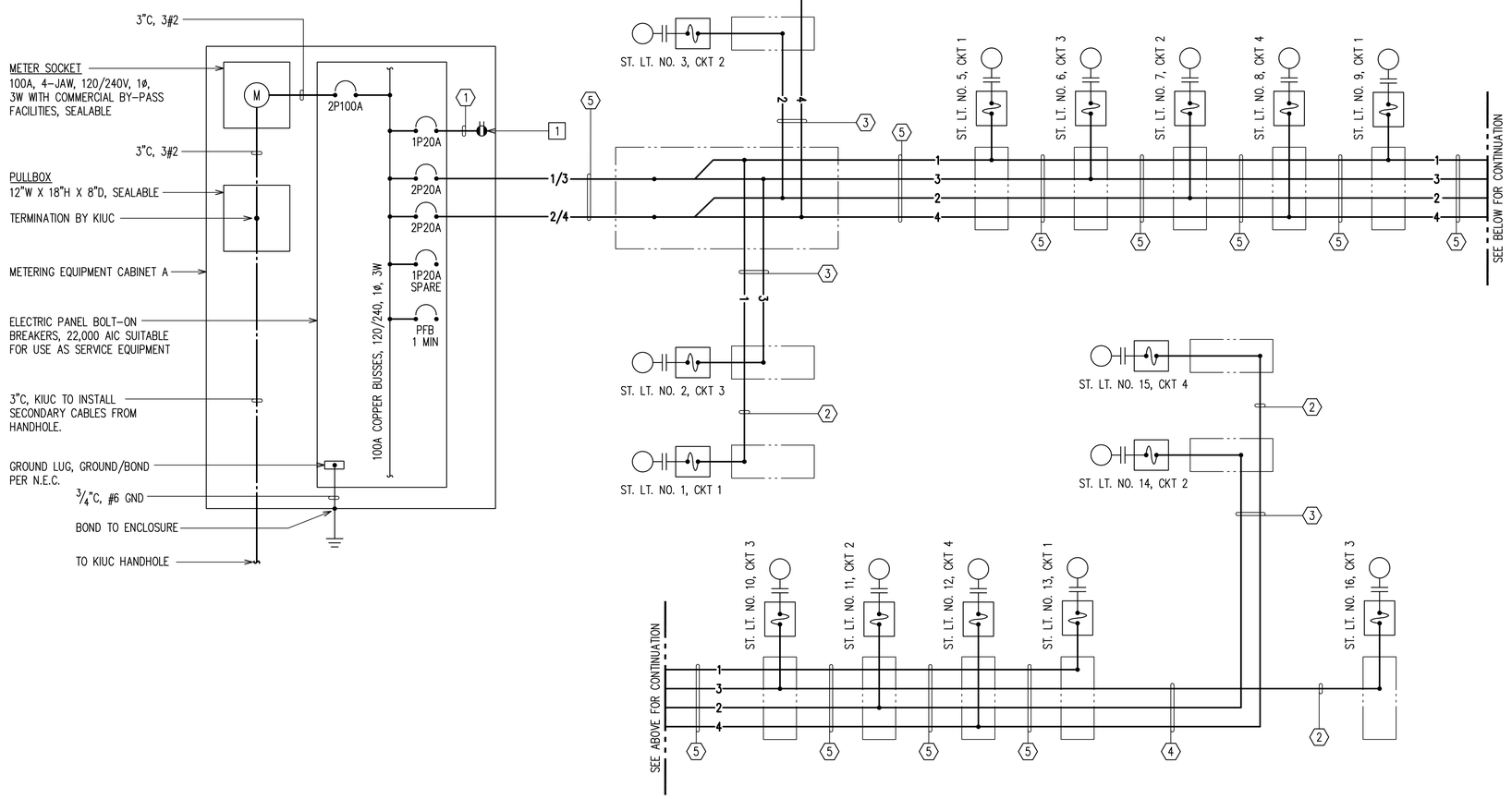

1 / E-500 STREET LIGHTING ONE-LINE DIAGRAM 1
NOT TO SCALE

JENSON J. SANTOS LICENSED PROFESSIONAL ENGINEER No. 14286-E HAWAII, U.S.A.

This work was prepared by me or under my supervision and I am a duly licensed professional engineer under the laws of the State of Hawaii. Professional Engineer, Architect, Surveyor, and Landscape Architect. 4/30/24 Date of the license

NOTE: Contractor to check and verify dimension at job before proceeding with work

REVISION	DATE	DESCRIPTION	MADE BY	APPROVED

PROJECT:
DEPARTMENT OF HAWAIIAN HOME LANDS
SITE AND INFRASTRUCTURE IMPROVEMENTS
FOR HANAPĒPĒ RESIDENTIAL LOTS, PHASE 2
TMK: (4) 1-8-007: 003 (PORTION) & (4) 2-8-007: 001 TO 050 (PORTION)
Hanapēpē, Waimea, Kaua'i, Hawai'i

STREET LIGHT ONE-LINE DIAGRAM 1

THIS DOCUMENT CONTAINS INFORMATION PROPRIETARY TO SSFM INTERNATIONAL, INC. AND IS FURNISHED IN CONFIDENCE FOR THE LIMITED PURPOSE OF EVALUATION, BIDDING OR REVIEW. THIS DOCUMENT OR ITS CONTENTS MAY NOT BE USED FOR ANY OTHER PURPOSE AND MAY NOT BE REPRODUCED OR DISCLOSED TO OTHERS WITHOUT THE PRIOR WRITTEN CONSENT OF SSFM INTERNATIONAL, INC.

DATE
NOVEMBER 2022

SHEET NUMBER
E-500
108 OF 109 SHEETS

2022-11-14 7:18 AM Z:\Acad\PROJECTS\218718\ES00-103_218718_St Lt Dwg 1

CONDUIT AND WIRING

ITEM	DESCRIPTION
1	3/4"C, 2#12, #12 GND
2	3"C, 2#1, #1 GND
3	3"C, 4#1, #1 GND
4	3"C, 6#1, #1 GND
5	3"C, 8#1, #1 GND

NOTE(S):

1. DUPLEX GFI RECEPTACLE NEMA 5-20R, WP
2. EXST 3"C STUBBED AND CAPPED
3. INTERCEPT EXST CONDUIT, PROVIDE COUPLINGS, AND EXTEND TO NEW PULLBOX. INSTALL PULLWIRE.

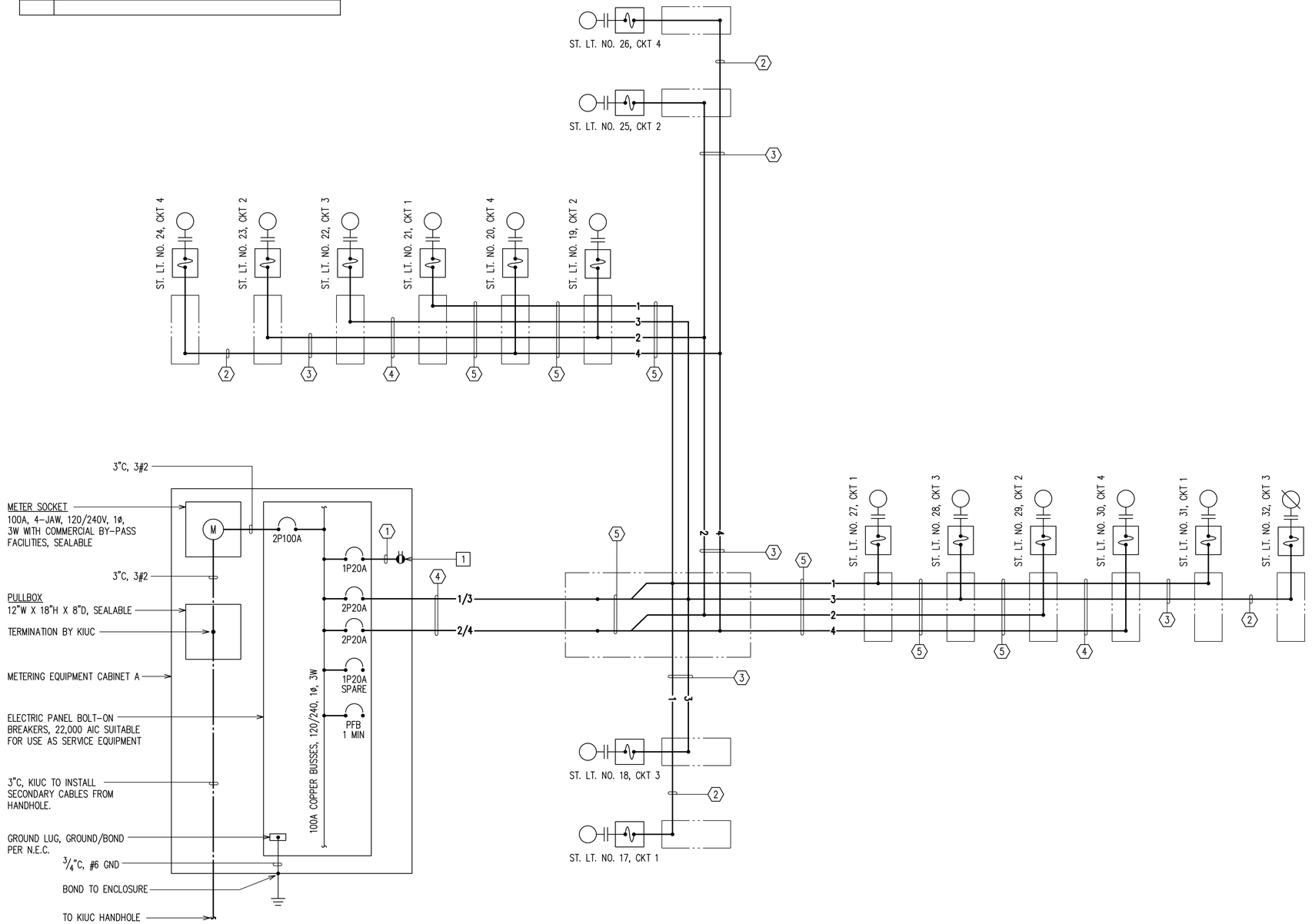

1 STREET LIGHTING ONE-LINE DIAGRAM 2
E-501 NOT TO SCALE

JENSON J. SANTOS
LICENSED PROFESSIONAL ENGINEER
No. 14286-E
HAWAII, U.S.A.

This work was prepared by me or under my supervision and I am responsible for its accuracy. I am aware that I am the Professional Engineer in Direct Charge, Control, and Supervision of the work and the Professional Engineer, Architect, Surveyor, and Landscape Architect of Record.

4/30/24
Date

NOTE: Contractor to check and verify dimension at job before proceeding with work.

REVISION	DATE	DESCRIPTION	MADE BY	APPROVED

PROJECT:
DEPARTMENT OF HAWAIIAN HOME LANDS
SITE AND INFRASTRUCTURE IMPROVEMENTS
FOR HANAPĒPĒ RESIDENTIAL LOTS, PHASE 2
TMK: (4) 1-8-007: 003 (PORTION) & (4) 2-8-007: 001 TO 050 (PORTION)
Hanapēpē, Waimea, Kaua'i, Hawai'i

STREET LIGHT ONE-LINE DIAGRAM 2

THIS DOCUMENT CONTAINS INFORMATION PROPRIETARY TO SSFM INTERNATIONAL, INC. AND IS FURNISHED IN CONFIDENCE FOR THE LIMITED PURPOSE OF EVALUATION, BIDDING OR REVIEW. THIS DOCUMENT OR ITS CONTENTS MAY NOT BE USED FOR ANY OTHER PURPOSE AND MAY NOT BE REPRODUCED OR DISCLOSED TO OTHERS WITHOUT THE PRIOR WRITTEN CONSENT OF SSFM INTERNATIONAL, INC.

DATE
NOVEMBER 2022

SHEET NUMBER
E-501

109 OF 109 SHEETS

2022-10-27 8:10 AM Z:\Users\PROJECTS\218718\E501-104_218718_St Lt Dwg 2